BRABUS SHADOW 1200



OWNER'S MANUAL

BRABUS SHADOW 1200/1500 ST/XT

MODEL YEAR 2024–2026

BRABUS MARINE

Table of Contents

1 Introduction 5
1.1 Purpose of this manual 5
1.2 Safety symbols 5
1.3 Document conventions 6
1.4 Copyright 6
1.5 Disclaimer 6
1.6 Warranty 7
2 Safety 8
2.1 Safe and responsible boat operation 8
2.2 Safety diagram 10
2.3 Fire protection and control 10
2.3.1 Fire control equipment 11
2.3.2 Boat owners' and users' responsibilities 12
2.3.3 Checklist: Fire in the engine 12
2.3.4 Checklist: After fire 12
2.4 Carbon monoxide 13
2.5 Carbon monoxide monitor 14
2.6 Smoke alarm 15
2.7 Life raft 15
2.8 Safety labels on board 16
3 Product overview 24
3.1 Purpose of use 24
3.2 Identification 24
3.3 Builder's plate 25
3.4 CE certification 26
3.5 Dimensions and weight 26
3.6 Boat layout 28
4 Product description 30
4.1 Stability and buoyancy 30
4.1.1 Draining 30
4.1.2 Openings in the hull and deck 30
4.1.3 Bilge system 32
4.1.3.1 Bilge pumps and outlets 33
4.2 Technical systems 34
4.2.1 Electrical system 34
4.2.2 12V system 35

© 2026 Axopar Boats / Brabus Marine

4.2.3 Main switches....36
4.2.4 Direct supply fuses....37
4.2.5 Fuses....37
4.2.6 Heavy duty fuses....38
4.2.7 Batteries....38
4.2.7.1 Charging the batteries....39
4.2.7.2 Winter storage....39
4.2.7.3 Cleaning the batteries....39
4.2.8 110/230V system....39
4.2.9 Fuel system....40
4.2.9.1 Refueling the boat....41
4.2.9.2 Maintaining the fuel system....42
4.2.10 Septic system....43
4.2.10.1 Toilet seat....43
4.2.10.2 Septic tank....44
4.2.10.3 Shower sump pump....44
4.2.11 Bow thruster....45
4.3 Optional equipment....45
4.3.1 Freshwater system....45
4.3.2 Heating system....47
4.3.3 Air conditioning....48
4.3.4 Navigation system....49
4.3.4.1 VHF equipment....49
4.3.4.2 Radar....50
4.3.5 Anchor windlass....50
4.3.6 Solar panel trickle charger....51
4.3.7 Roof racks....52
4.3.8 Full RGB lighting package....52
4.3.9 Sunshades....52
4.3.10 Canopy....53
4.3.11 Axopar connectivity....53
5 Transportation....54
5.1 Lifting the boat....54
5.2 Transporting and storing the boat....55
6 Operation....57
6.1 Handling devices....57
6.1.1 Steering console....57
6.1.2 Steering console switch panel....58
6.1.3 Windscreen wipers....59

© 2026 Axopar Boats / Brabus Marine

6.1.4 Steering system....59
6.1.4.1 Checking and topping up oil....59
6.1.4.2 Steering maintenance....60
6.1.5 Throttle lever....60
6.1.5.1 Trim and tilt....60
6.1.6 Starting the engine....60
6.1.7 Joystick piloting....61
6.2 Swivel seat - Driver and passenger seats....62
6.3 Inspecting the boat....62
6.3.1 Checklist: Regular inspection before leaving harbor....63
6.3.2 Checklist: After using the boat....63
6.3.3 Notes for sunny conditions for Black OPS boats....64
6.4 Handling the boat....65
6.4.1 Checklist: Boat handling before leaving harbor....65
6.4.2 Leaving the jetty....65
6.4.3 Driving the boat....66
6.4.3.1 Emergency stop....66
6.4.3.2 Driving at high speed....66
6.4.3.3 Driving in rough seas....67
6.4.3.4 Maneuvering in narrow channels....68
6.4.4 Visibility from steering position....68
6.4.5 Using the trim tabs....69
6.5 Preventing falling overboard....69
6.6 Anchoring, docking and mooring....71
6.6.1 Fastening points....71
6.6.2 Docking....72
6.6.3 Checklist: Before anchoring....72
6.6.4 Towing and mooring....73
7 Maintenance....74
7.1 Cleaning and maintaining the gelcoat surface....74
7.2 Antifouling....76
7.3 Maintaining the interiors....77
7.3.1 Wooden interiors....77
7.3.2 Plastic and painted surfaces....77
7.3.3 Fabrics....77
7.3.4 Doors and hatches....77
7.4 Maintaining the cover....77
7.4.1 Cleaning the cover....78
7.5 Protecting underwater metal parts....78
7.6 Preventing corrosion....79
7.7 Preventing frost damage....79
7.8 Checklist: Before winter lay-up....79

© 2026 Axopar Boats / Brabus Marine

7.9 Checklist: Before launching....80
7.10 Corrective maintenance....80
7.10.1 Deposits....80
7.10.2 Scratches and nicks....81
7.10.3 Stains....81
7.10.4 Deep marks, gouges and holes....81
8 Environment....82
8.1 Requirements for North America....82
9 Appendix I: Checklists....84
9.1 Checklist: Fire in the engine....84
9.2 Checklist: After fire....84
9.3 Checklist: After grounding....84
9.4 Checklist: Regular inspection before leaving harbor....85
9.5 Checklist: After using the boat....86
9.6 Checklist: Boat handling before leaving harbor....86
9.7 Checklist: Before anchoring....86
9.8 Checklist: Before winter lay-up....87
9.9 Checklist: Before launching....88
9.10 Checklist: Fuel system....88
9.11 Maintenance log....88
10 Appendix II: Fuel system....91
11 Appendix III: Electrical diagrams....92
12 Appendix IV: AIS Decontamination – North America....93
13 Appendix V: Transport dimensions....94
14 Appendix VI: Warranty terms....95
14.1 Warranty terms: US....96
14.2 Warranty terms: non-US....97

© 2026 Axopar Boats / Brabus Marine

1 Introduction

1.1 Purpose of this manual

This owner's manual contains important information and instructions for using your boat.

In this owner's manual you can find important information that help you handle and maintain your boat. The manual contains detailed information about the boat and the systems installed, and general information about handling and taking care of the boat. The latest version of the manual is available in electronic format at the manufacturer's website.

Read the manual carefully and familiarize yourself with your boat before you start to use it. Also ensure that the anticipated wind and wave conditions correspond to the design category of your boat, and that you and your crew are able to handle the boat in these conditions.



This owner's manual is not a substitute for boating safety skills or good seamanship.

If this is your first boat or if this boat type is new to you, ensure you can handle the boat before you set out for the first time.

For information about local sea schools and approved instructors, please ask your boat dealer, the local boat clubs and national motorboat or yacht federations for advice. They can also provide information on specific local regulations on issues such as a driving licence or authorization, registration, insurance, and safety equipment.

This owner’s manual is not a detailed maintenance or troubleshooting guide. If problems occur, contact the boat manufacturer or its local representative. When you are in need of maintenance or repair and alteration work, always turn to competent and trained professionals. Changes that can affect the boat’s security features must be assessed, carried out and documented by competent professionals. The boat manufacturer cannot be held responsible for unauthorized modifications. Every change to the boat’s center of gravity (from highly mounted heavy equipment or a new engine type etc.) significantly affects the stability, trim and performance of the boat.

Keep this manual in a safe place and pass it on to the new owner if you sell your boat. If the manual is mislaid or destroyed, a copy can be ordered from your dealer or downloaded from the manufacturer's website.

See the purchase agreement or order for the scope of your purchase. In case something does not work satisfactorily with your boat or its equipment, you can check the service documents for possible service and repair measures. If uncertain, always contact your dealer.

1.2 Safety symbols

This owner's manual contains danger, warning, caution and notice statements informing the user or authorized service representatives of any potential harm to the product or person.

Hazard is defined as a source of potential injury to a person.

All abnormal use is forbidden, including disregarding information on safety.

© 2026 Axopar Boats / Brabus Marine

⚠ DANGER **Danger** indicates an imminently hazardous situation which, if not avoided, **will result in death or serious injury**.

⚠ WARNING **Warning** indicates a potentially hazardous situation which, if not avoided, **could result in death or serious injury**.

⚠ CAUTION **Caution** indicates a potentially hazardous situation which, if not avoided, **might result in minor or moderate injury**.

NOTICE **Notice** indicates a potential situation which, if not avoided, **might result in property damage or in an undesirable result or state**.

The information icon calls attention to information that clarifies or simplifies a procedure.

1.3 Document conventions

Units

This manual uses SI units in accordance with ISO 1000. In some cases, other units may have been used alongside.

An exception is the wind velocity, which in the Recreational Boat Directive is given in the Beaufort Scale.

Terminology

In this manual, the right side of the hull is referred to as starboard (STB) and the left side as port.

1.4 Copyright

Copyright ©2026 Axopar Boats / BRABUS Marine. All rights reserved.

This Owner's Manual is protected by copyright controlled by Axopar Boats / BRABUS Marine. This manual cannot be wholly or partly reproduced without prior written authorization by Axopar Boats / BRABUS Marine. This material also contains confidential information, which may not be disclosed to others without the prior written consent of Axopar Boats / BRABUS Marine.

1.5 Disclaimer

The material in this manual is for information purposes only.

Axopar Boats / BRABUS Marine reserves the right to change the products without prior notice to improve reliability, function, design or other characteristics of the products. Axopar Boats / BRABUS Marine assumes no liability for any damages, losses, costs or expenses arising out of or relating to the use of this manual or the products described herein.

Axopar Boats / BRABUS Marine makes no representations and warranties with respect to this manual, either express or implied, including, but not limited to, the implied warranties of merchantability and fitness for a particular purpose.

1.6 Warranty

The Limited Warranty for the boat and the relevant contact information are enclosed as a separate document.

For any warranty claims, please contact your BRABUS Marine dealer mentioned on the cover page.

© 2026 Axopar Boats / Brabus Marine

2 Safety

⚠ WARNING

The boat owner is responsible for making sure that the safety equipment on the boat meets the rules and regulations of the local authorities.

- Keep the necessary safety equipment up to date and on the boat at all times.

Check the preferred location of the major safety equipment in the section ***Safety diagram***.

⚠ WARNING

Overloading the boat can damage the engine, even when shut off.

- When loading the boat, never exceed the maximum recommended load of the boat shown in the builder's plate.
- Always load the boat carefully and distribute loads appropriately to maintain design trim.
- Avoid placing heavy equipment or material high up in the boat.

The liquids in the built-in tanks are not included in the maximum load shown on the builder's plate.

⚠ WARNING

When out on the water, always use the seats intended for the passengers.

Do not exceed the maximum number of persons allowed in the boat, shown in the builder's plate.

The total weight of the persons on board and their personal luggage must never exceed the maximum load of the boat shown in the builder's plate.

⚠ CAUTION

Risk of personal injury and risk of damage to the roof or roof structures.

Do not place or attach any load or equipment on the roof or to the roof structures if there is no specific roof rack.

It is forbidden to enter the roof or dangle from the roof structures.

2.1 Safe and responsible boat operation

Please familiarize yourself to these safety aspects before using the boat.

The person controlling the boat is in charge of the safety of all the passengers as well as other seafarers.

⚠ CAUTION

The owner is responsible for ensuring that the normal mode of operation is maintained. This means that the speed of the craft needs to be matched to the prevailing sea state, the craft being used "with good seamanship behaviour."

Neglecting these safety rules might lead to serious injury or death.

© 2026 Axopar Boats / Brabus Marine

- Anyone who controls the boat must be competent to operate a boat of this type and size.
- The boat must not be controlled by an unqualified operator or by an operator under the influence of alcohol, drugs or other substance which impair judgement.
- The boat must always be operated at speeds that will not put people or property in danger.
- The captain must constantly be aware of conditions surrounding the boat when underway and especially before sharp turns.
- In challenging conditions such as rough water and winds, impaired visibility, and congested waterways; reduce speed, use appropriate navigation equipment and lights, and use a lookout to identify possible hazards.
- Pay attention to your wake. It can endanger smaller boats or damage moored boats or other property. You are responsible for damage caused by your wake.
- Only allow passengers to ride in areas that do not pose a hazard to themselves or the boat.
- Do not allow passengers to ride on aft folding seats, aft fender boxes or gunwales.
- Passengers must remain seated while the boat is moving.
- Use of alcohol, drugs, or other judgment-impairing substances poses a serious threat to yourself and others. The boat operator is responsible for the behaviour of people on board.
- For every passenger on board, the boat must carry one wearable personal flotation device (PFD).

⚠ WARNING

Speed hazard

This is a high-performance vessel; the speed of the craft needs to be adapted to the environment. To ensure your passengers' safety and comfort, avoid sharp turns in speeds exceeding 40 knots. Never operate your boat at speeds which exceed your ability to react to surprising and unpredictable situations. The captain is always responsible for operating the vessel in a safe way.

⚠ WARNING

Never operate a boat at a speed at which you do not feel comfortable.

⚠ DANGER

Slipping hazard

Deck might be slippery when wet, even on non-skid areas. Be extremely cautious on slippery surfaces and wear suitable footwear.

⚠ DANGER

Do not go out boating in severe weather conditions as this might lead to serious injuries or death. Always get back to shore before the weather turns bad.

© 2026 Axopar Boats / Brabus Marine

2.2 Safety diagram

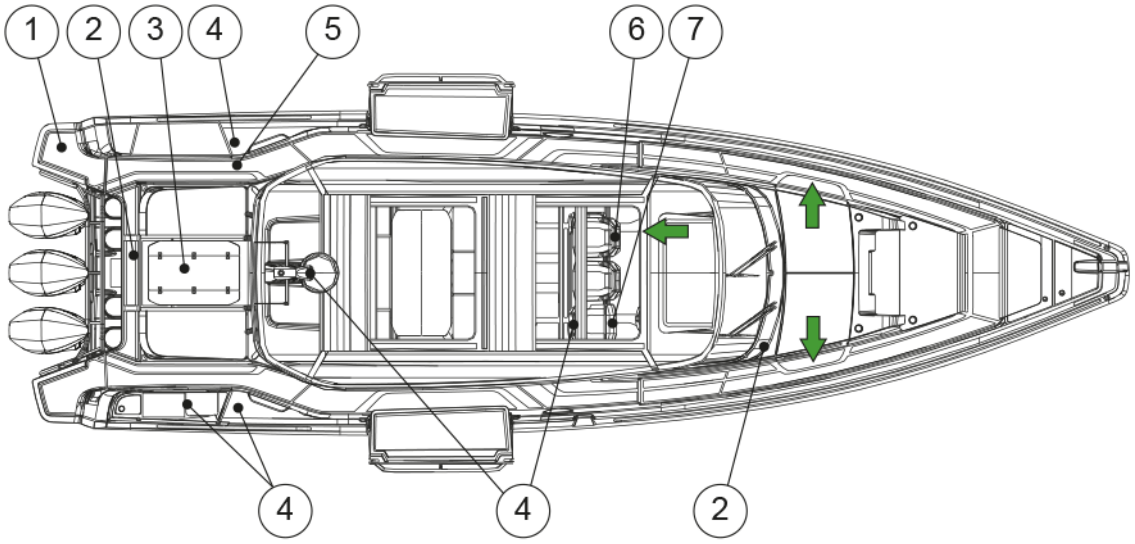

(1) Swim ladder
(2) CO monitor (also in the optional aft cabin)
(3) Life raft storage
(4) Fire extinguisher
(5) Remotely operated engine main switches.
(6) High water alarm
(7) Remote main switches
→ Exit

2.3 Fire protection and control

The most common fire sources are the engine and the stove. If there is a fire in the boat, it may result in an explosion.

⚠ WARNING

Fire usually spreads very fast — be quick to extinguish the fire with the fire extinguisher on the boat!

See the section ***Safety diagram*** for the exact location of the fire extinguisher(s).

If the fire starts to get out of control, leave the burning boat to save lives.

⚠ WARNING

Always put down the fire by depriving the fire of oxygen.

Do not use water!

Using water in fire involving flammable liquids can spread the liquid and make the fire worse.

© 2026 Axopar Boats / Brabus Marine

⚠ WARNING If the fire reaches the fuel tank, an explosion may occur and cause a large area around the boat to burn.

- Keep the bilge clean and check it regularly for fuel and gas fumes or fuel and oil leaks.
- Do not hang curtains or other flammable material near or above the LPG cooker or other equipment with naked flames.
- Never leave the boat unattended when the cooker or heater is switched on.
- Never refuel or replace gas containers when the engines are running.
- Never smoke when handling fuel or gas.
- Never block evacuation routes or emergency exits.
- Never block access to safety equipment such as fuel valves or main power switches.
- Never block access to fire extinguishers, visible or concealed.
- Never modify the boat's systems (especially electrical, fuel or gas systems).

2.3.1 Fire control equipment

Check the exact locations of the fire control equipment in the section ***Safety diagram***.

Fire extinguishers

You must fit the boat with hand-held fire extinguishers. The fire ratings of the fire extinguishers must be at least as follows:

For Axopar Shadow 1500 CE version:

- Fender boxes: 256B.
  - Driver seatbase: 8A68B (2kg)
  - Fenderbox near engines: 331B (6kg + 4kg or 4 x 2kg)
  - Front Cabin: 8A68B (2kg)
  - Optional aft cabin: 8A68B (2kg)

For Axopar Shadow 1200 CE version requirements as above except:

Fenderbox near engines: 265B (6kg + 2kg)

Check the exact locations of the fire extinguishers in the section ***Safety diagram***.

The fire extinguishers are not included in the manufacturer's delivery. Before using the boat, it must be furnished with fire extinguishers.

Fire blanket

A fire blanket is ideal for putting out small fires and also one of the best options if a person's clothes catch fire.

- Keep a fire blanket onboard in an easily accessible place.

© 2026 Axopar Boats / Brabus Marine

2.3.2 Boat owners' and users' responsibilities

It is your responsibility as the boat owner and user to ensure that the fire control equipment is accessible at all times.

- Check the fire extinguishing equipment regularly at the intervals specified for the equipment.
- Replace equipment with expired date immediately with equivalent or better equipment.
- Advice the crew and guests of the location and instructions for use of the fire control equipment, and the location of evacuation routes and emergency exits.

2.3.3 Checklist: Fire in the engine

- Stop the engine.
- Steer the boat up against the wind, if possible.
- Make sure all passengers have life jackets.
- If necessary:
  - Evacuate the passengers.
  - Call for sea rescue.
- Shut off fuel and main power switches.
- Extinguish the fire.
- Wait until fully certain that the fire has been extinguished before opening the engine cover.

  Carefully open the engine cover and be prepared to use the handheld fire extinguisher if necessary for post-fire extinguishing.
- Put out possible smoldering fires with water.

2.3.4 Checklist: After fire

- Open doors and windows for better ventilation.
- Inspect the boat and its equipment, and repair any damages.
- Contact local authorities, if needed.
- Make sure that the fire extinguishing equipment is refilled or replaced after use.

© 2026 Axopar Boats / Brabus Marine

2.4 Carbon monoxide

⚠ WARNING

Carbon monoxide (CO) is colorless, odorless, tasteless, and extremely dangerous gas.

All engines, generators, and fuel burning appliances produce CO as exhaust.

Prolonged exposure to low concentrations or very quick exposure to high concentrations may cause brain damage or death.

Open all doors, curtains, windows, and hatches to let fresh air circulate when running an engine or generator or burning any fuel while the boat is anchored, moored or docked.

If you can smell engine or generator exhaust, you are inhaling CO. CO can also be present without the smell of exhaust fumes.

⚠ WARNING

If the CO alarm is activated, make sure all persons onboard exit the closed spaces.

- If exhaust fumes are detected or if CO accumulation is suspected on the boat, take immediate action to ventilate these fumes.
- Turn off all engines and generators.
- Open all hatches, windows and ports to ventilate.

Changing course and speed to place the boat heading into the wind can improve ventilation.

Symptoms of carbon monoxide poisoning are dizziness, ears ringing, headache, nausea and unconsciousness. A poisoning victim's skin often turns cherry red.

Because the carbon monoxide gas is odorless, colorless and tasteless, it is unlikely to be noticed until a person is affected.

⚠ DANGER

- If CO poisoning is suspected, have the victim breath fresh air deeply.
- If breathing stops, resuscitate.
- A victim often revives, but then relapses because organs are damaged by the lack of oxygen.

  Seek immediate medical attention.

High levels of carbon monoxide may accumulate in the following ways:

- Blocking hull exhausts while operating at slow speed or if exhausts are submerged.
- Using canvas curtains.
- Winds blowing exhaust toward boat occupants.
- Operating engine or generator in a confined space.
- Operating with the bow high.

Dangerous concentrations of carbon monoxide are present if:

© 2026 Axopar Boats / Brabus Marine

- the engine or generator exhaust systems leak
- insufficient fresh air is circulating where people are present
- fumes move from the rear of the boat into the cockpit and cabin area.

To minimize the danger of CO accumulation when the engine and generator are running or when using burning fuel applications:

- Be sure to have sufficient ventilation when using canvas or window-type side curtains when underway, anchored, moored or docked.
- Operate all burning fuel appliances, such as charcoal, propane, LPG, CNG or alcohol cooking devices, in areas where fresh air can circulate. Do not use such devices where there is no noticeable air movement, especially in the cabin, when anchored, moored or docked.
- Do not idle the engine without moving the boat for more than 15 minutes at a time.
- Inspect the exhaust system regularly. See the manufacturer's manual for instructions.

2.5 Carbon monoxide monitor

There is a carbon monoxide monitor system in the boat.

The carbon monoxide monitors are located in all accommodation areas of the boat.

- With regular intervals, check that the monitor system is functioning. For instructions, see the equipment manufacturer's manual.
- It is not possible to turn the CO monitor off when the boat is in use.

See here the description of the audible and visual signals of the monitor.

Low battery voltage can trigger the carbon monoxide monitor to sound an alarm.

Operation	**Audible Signal**	**Visual Signal**
Normal	None	Green led flashes every minute
CO alarm	4 beeps, 5 seconds off - cycle repeats	Flashing red
Alarm malfunction	Beep every 30 seconds	Alternating red/green flash
End of life signal	Beep every 25-30 second	Red red green green flash sequence

© 2026 Axopar Boats / Brabus Marine

2.6 Smoke alarm

Boat is equipped with smoke alarms.

Smoke alarm is battery powered. When the battery level reaches low level, the smoke alarm will start emitting low battery warning signal.

Smoke alarm may give false alarm if there is steam, condensation, or normal smoke or fumes in its vicinity.

The smoke alarm has a built-in hush or silence feature incorporated into the test button. This feature can be useful when unwanted alarm is caused by cooking or other non-hazardous sources trigger the alarm. Hush or silence feature temporarily silences the alarm and can be activated by pressing the test button for approximately 1 second. When hush or silence feature is activated, the alarm will enter dormant mode for 10-minute period with reduced sensitivity. Reduced sensitivity is indicated by red LED flashing every 10 seconds. After the period is over, the device will signal returning to normal sensitivity with two short beeps. If smoke density increases during hush or silence period, the device will automatically return to alarm mode.

Smoke alarms should be replaced at minimum every 5 years.

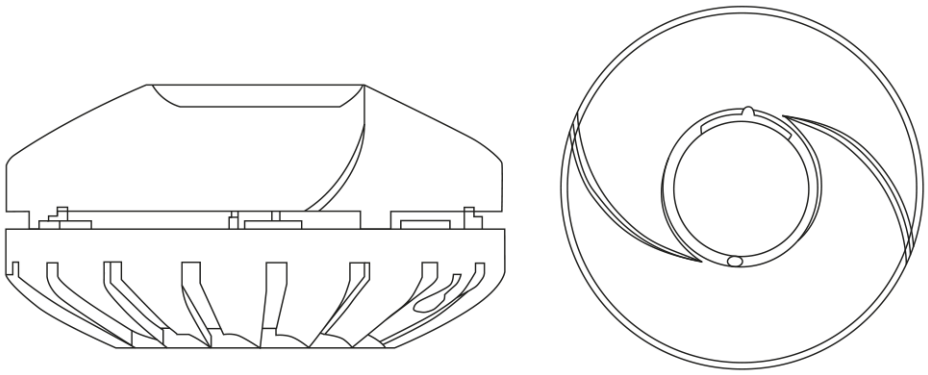

Figure 2.1 Smoke alarm

2.7 Life raft

The boat is not equipped with a life raft by the manufacturer.

Storing a life raft

If you decide to acquire a life raft for your boat, stow it to the aft of the boat, so that it is easily accessible in case of emergency.

Using the life raft

The life raft must be tied to the stern of the boat and prepared for use.

In an emergency, it is easiest and safest to board the life raft from the swimming deck. Switch off the engine before using the life raft.

Follow the life raft manufacturer’s instructions.

© 2026 Axopar Boats / Brabus Marine

2.8 Safety labels on board

The following picture and table present the location and description of the safety labels on board. Location of the labels may vary depending on the chosen options.

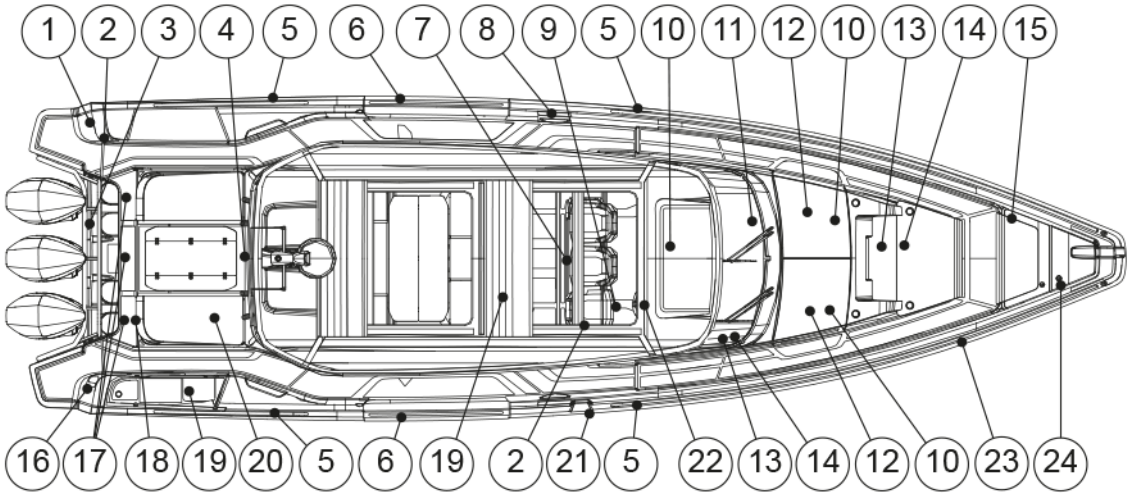

Position	Label	Description
1		**Danger** Contact with a spinning propeller will cause serious injury or death. Stay clear of boat and stay off swim plaform and boarding ladder while engine is running.
1	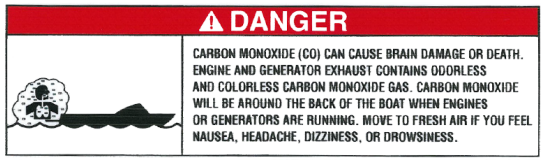	**Danger** Carbon monoxide (CO) can cause brain damage or death. Engine and generator exhaust contains odorless and colorless carbon monoxide gas. Carbon monoxide will be around the back of the boat when engines or generators are running. Move to fresh air if you feel nausea, headache, dizziness, or drowsiness.

© 2026 Axopar Boats / Brabus Marine

Position	Label	Description
1	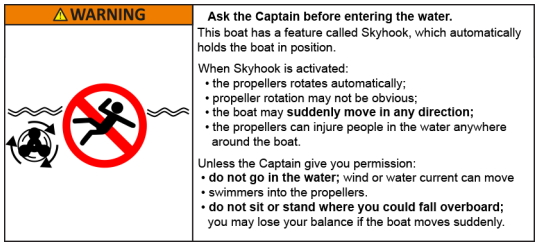	**Ask the captain before entering the water** The boat has a Skyhook feature which automatically holds the boat in position. When Skyhook is activated: • The propellers rotate automatically • The rotation of the propellers may not be obvious • The boat may **suddenly move in any direction** • The propellers may injure people in the water **anywhere** around the boat Unless the Captain gives you permission: • **Do not go in the water**; wind or water current can move swimmers into the propellers • **Do not sit or stand where you could fall overboard**; you may lose your balance if the boat moves suddenly
2		Fire extinguisher
3	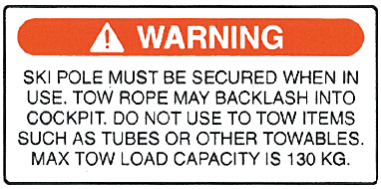	**Warning** Ski pole must be secured when in use. Tow rope may backlash into cockpit. Do not use to tow items such as tubes or other towables. Max tow load capacity is 130 kg.
4		**Danger** Fore and aft sun pads should not be used when vessel is under way.
5	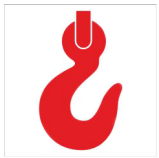	Lifting area
6		Keep shut while underway.

© 2026 Axopar Boats / Brabus Marine

Position	Label	Description
7		**Warning** Avoid serious injury or death. Unexpected seat rotation may cause ejection of occupant. Lock swivel when speed exceeds 5 mph.
8		**Caution** Heater exhaust Hot fumes
9		**Caution** If switch is turned off while engine is running the alternator will be damaged.
10	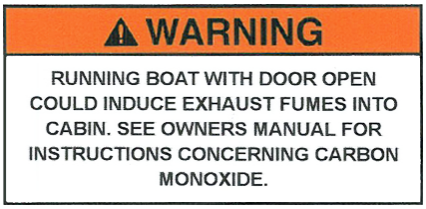	**Warning** Running boat with door open could induce exhaust fumes into the cabin. See the owner's manual for instructions concerning carbon monoxide.
10		Keep shut while underway.
11		Waste tank shutoff valve
12		Emergency exit

© 2026 Axopar Boats / Brabus Marine

Position	Label	Description
13		**Danger** Leaving window open could induce exhaust fumes into cabin resulting in severe personal injury or death.
14		**Warning** Watertight closure. Keep shut when under way.
15		**Warning** Keep hands out of machinery. Follow up instructions for remote control enabling.
16	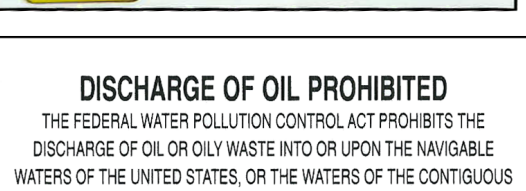	**Discharge of oil prohibited** The federal water pollution control act prohibits the discharge of oil or oily waste into or upon the navigable waters of the United States, or the waters of the contiguous zone, or which may affect natural resources belonging to, appertaining to, or under the exclusive management authority of the Unites States, if such discharge causes a film or discoloration of the surfaces of the water or causes a sludge or emulsion beneath the surface of the water. Violators are subject to substantial civil penalties and/or criminal sanctions including fines and imprisonment.
16	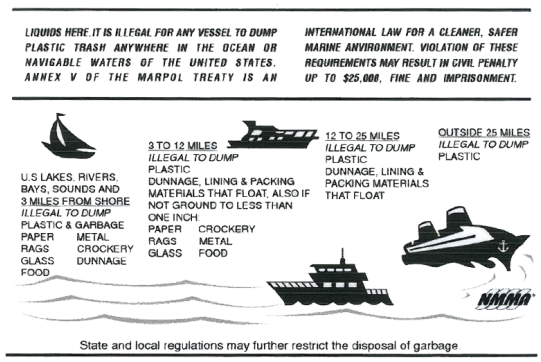	Liquids here. It is illegal for any vessel to dump plastic trash anywhere in the ocean or navigable waters of the United States. Annex V of the Marpol Treaty is an international law for a cleaner, safer marine environment. Violation of these requirements may result in civil penalty up to $25,000, fine and imprisonment. U.S. lakes, rivers, bays, sounds and 3 miles from shore Illegal to dump plastic & garbage, paper, metal, rags, crockery, glass, dunnage, food. 3 to 12 miles Illegal to dump plastic, dunnage, lining & packing materials that float. Also if not ground to less than one inch: paper, crockery, rags, metal, glass, food 12 to 25 miles Illegal to dump plastic, dunnage, lining & packing materials that float Outside 25 miles Illegal to dump plastic State and local regulations may further restrict the disposal of garbage.

© 2026 Axopar Boats / Brabus Marine

Position	Label	Description
17		**Warning** No ventilation is provided. Fuel vapors are a fire and explosion hazard. To avoid injury and death, do not store fuel or flammable liquids here.
18		**Warning** Installation of maintenance free AGM batteries are only allowed in this area.
19		**Warning** Do not close the wetbar lid until the grill has completely cooled down.
20	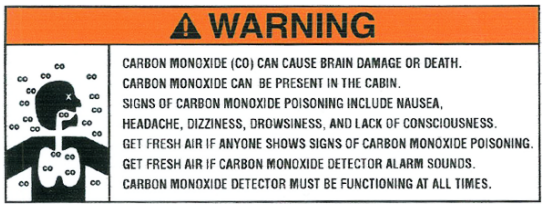	**Warning** Carbon monoxide (CO) can cause brain damage or death. Carbon monoxide can be present in the cabin. Signs of carbon monoxide poisoning include nausea, headache, dizziness, drowsiness, and lack of consciousness. Get fresh air if anyone shows signs of carbon monoxide poisoning. Get fresh air if carbon monoxide detector alarm sounds. Carbon monoxide detector must be functioning at all times.
21	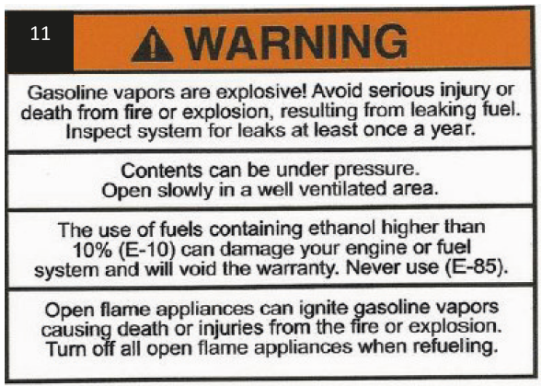	**Warning** Gasoline vapors are explosive! Avoid serious injury or death from fire or explosion, resulting from leaking fuel. Inspect system for leaks at least once a year. Contents can be under pressure. Open slowly in a well ventilated area. The use of fuels containing ethanol higher than 10% (E-10) can damage your engine or fuel system and will void the warranty. Never use (E-85). Open flame appliances can ignite gasoline vapors causing death or injuries from the fire or explosion. Turn off all open flame appliances when refueling.

© 2026 Axopar Boats / Brabus Marine

Position	Label	Description
21		Canada version **Warning** Gasoline vapours may cause fires or explosions. Do not overfill fuel tank.. Keep the craft away from open flames and sparks. Do not start craft if liquid gasoline or vapours are present. Always replace engine cover (or seat) before starting. **Warning** Avoid serious injury or death from fire or explosion resulting from leaking fuel. Inspect system for leaks frequently.
21		**Notice** Diesel only
21		**Notice** Petrol only
22		**Warning** Before activating Skyhook: 1. Check that no one is in the water. 2. Tell passengers not to enter water. Skyhook makes the propellers spin. This can injure swimmers.
22		**Warning** Use caution with skier in tow as tow rope may backlash into the cockpit when released.
22		**Warning** Qualified operator to be in control at all times. Operation by an unqualified operator can cause loss of control. This may result in severe injury, death, or property damage. Boat stability and handling will change with weight distribution. Read owners manual before use.

© 2026 Axopar Boats / Brabus Marine

Position	Label	Description
22	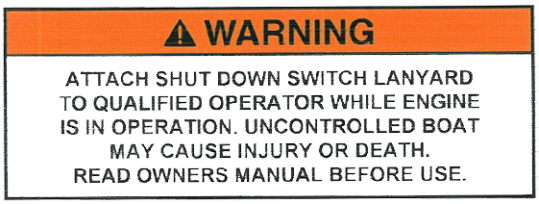	**Warning** Attach shutdown switch lanyard to a qualified operator while engine is in operation. Uncontrolled boat may cause injury or death. Read owner's manual before use.
22		**Warning** Visibility from the seated position at this helm station is limited. Avoid serious injury or death from collisions. Operation from a standing position may be necessary to maintain lookout as required by rules of the road. Read owners manual.
22	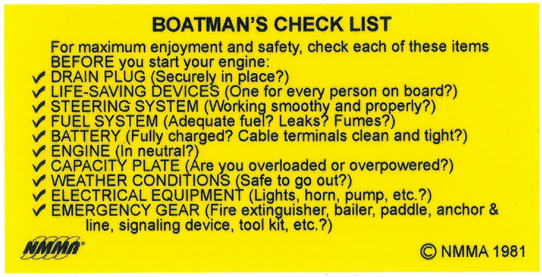	**Boatman's checklist** For maximum enjoyment and safety, check each of these items before you start your engine: - Drain plug (Securely in place?) - Life-saving devices (One for every person on board?) - Steering system (Working smoothy and properly?) - Fuel system (Adequate fuel? Leaks? Fumes?) - Battery (Fully charged? Cable terminals clean and tight?) - Engine (In neutral?) - Capacity plate (Are you overloaded or overpowered?) - Electrical equipment (Lights, horn, pump, etc?) - Emergency gear (Fire extinguisher, bailer, paddle, anchor & line, signaling device, tool kit, etc.?)
22		**Danger** • Contact with a spinning propeller will cause serious injury or death. • Shut off engines while people are in the water near the boat, on the swim platform, or on the boarding ladder. • Never operate in reverse towards a person in the water.

© 2026 Axopar Boats / Brabus Marine

Position	Label	Description
22	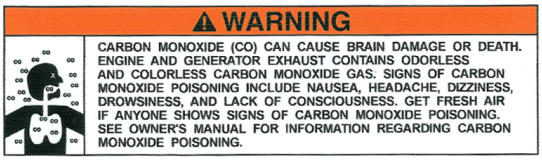	**Warning** Carbon monoxide (CO) can cause brain damage or death. Engine and generator exhaust contains odorless and colorless carbon monoxide gas. Signs of carbon monoxide poisoning include nausea, headache, dizziness, drowsiness and lack of consciousness. Get fresh air if anyone shows signs of carbon monoxide poisoning. See owner's manual for information regarding carbon monoxide poisoning.
22	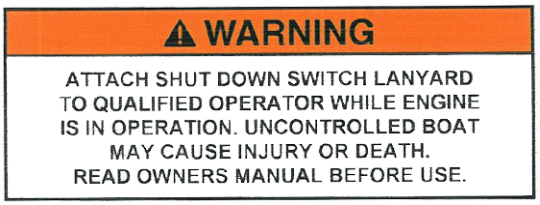	**Warning** Attach shut down switch lanyard to qualified operator while engine is in operation. Uncontrolled boat may cause injury or death. Read owners manual before use.
23		**Warning** Avoid personal injury. Stay inside deck rails (and gates) when boat is underway.
24	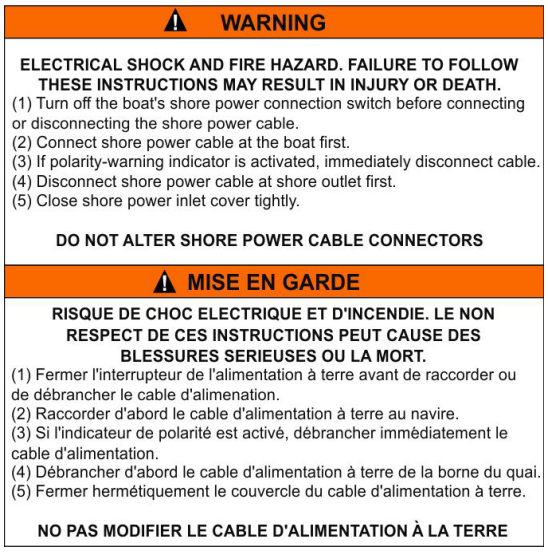	**Warning** Electrical shock and fire hazard. Failure to follow these instructions may result in injury or death. (1) Turn off the boat's shore power connection switch before connecting or disconnecting the shore power cable. (2) Connect shore power cable at the boat first. (3) If polarity-warning indicator is activated, immediately disconnect cable. (4) Disconnect shore power cable at shore outlet first. (5) Close shore power inlet cover tightly. **Do not alter shore power cable connectors**
24		Pay attention to the warnings and read the manual.

© 2026 Axopar Boats / Brabus Marine

3 Product overview

3.1 Purpose of use

The boat is a recreational boat, thus not suitable for professional use.

3.2 Identification

Each boat has a unique identification code, containing 14 characters and a hyphen.

The height of the code text is 6 mm, and it is located on the starboard side of the stern.

Example: **FI – AXOTD100F424**	**Data**
FI	Country of manufacturer: Finland
-	Hyphen
AXO	Manufacturer: Axopar Boats
TD	Boat model • TC = XC Cross Cabin • TD = Sun-Top • TE = Cross Top • TH = XC Cross Cabin Limited Edition • TJ = Sun-Top Limited Edition • TK = Cross Top Limited Edition
100	Boat number
F	Manufacturing month • A = January • B = February • C = March • etc.
4	Last digit of the manufacturing year
24	Model year

© 2026 Axopar Boats / Brabus Marine

3.3 Builder's plate

The builder’s plate is always located close to the steering position of the boat.

Boat has been inspected according to Recreational Craft Directive and related standards’ requirements. HPi Verification Services Ltd. has assigned EU Type-Examination Certificate (CE certificate) to the boat model.

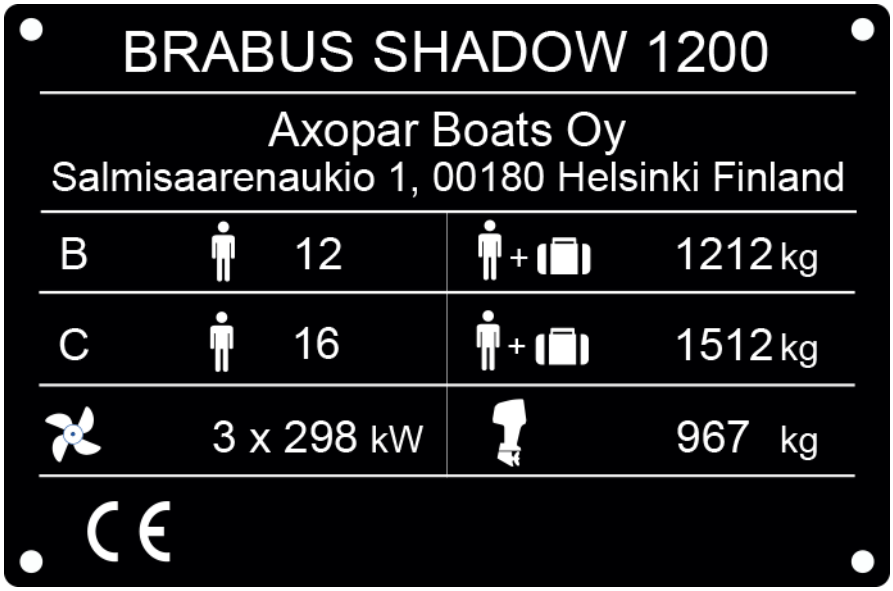

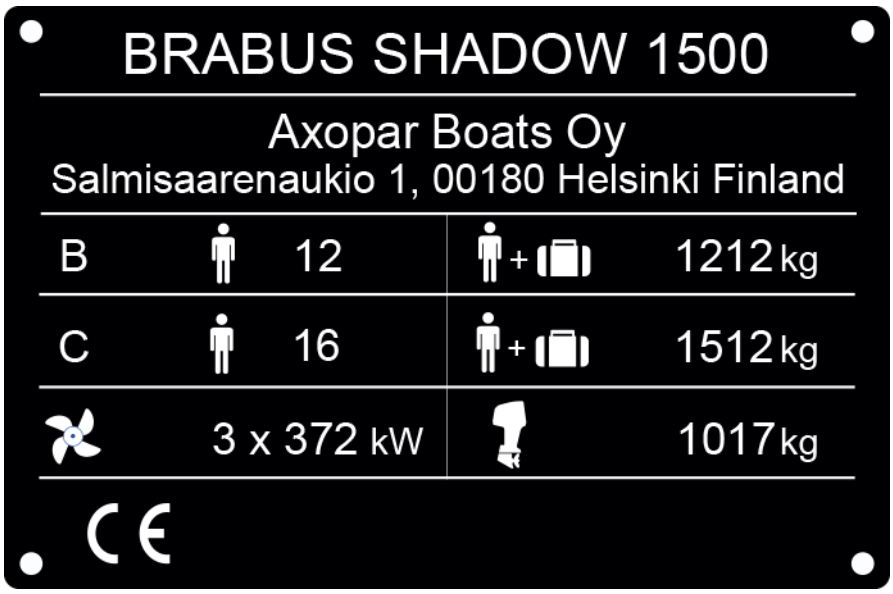

The builder's plate contains the following information:

- Boat model
- Manufacturer's address
- Maximum number of persons on board

© 2026 Axopar Boats / Brabus Marine

- Maximum load: total weight of persons including personal luggage and basic equipment, and excluding tank contents
- Maximum engine power
- Maximum engine weight

3.4 CE certification

This boat is classified to CE categories B and C.

The category is determined according to the maximum number of persons allowed onboard.

The CE certification indicates that a boat is designed and built in such a way that it retains its stability and buoyancy in given circumstances and meets other important requirements that are characteristic of the category in question. One of these requirements is that the boat must be easy to maneuver.

The CE categories classification also signifies that a boat is designed and constructed to withstand the following parameters in respect of stability, buoyancy, and other relevant essential requirements stated.

Category	Description
B. Offshore	The boat is designed for offshore voyages, where conditions up to and including wind force 8 on Beaufort Scale and significant wave heights up to and including 4 meters may be experienced.
C. Inshore	The boat is designed for voyages in coastal waters, large bays, estuaries, lakes and rivers, where conditions up to and including wind force 6 Beaufort Scale and significant wave heights up to and including 2 m may be experienced.

3.5 Dimensions and weight

Dimensions

Dimension	SI units	US units
Hull length (LH)	13.91 m	45.64 ft
Overall length (LMAX) (including engines)	14.13 m	45.93 ft
Hull beam (BH)	4.11 m	13.48 ft
Draught at max. load (including engine)	1.2 m	3.94 ft
Height measured from waterline at light load (including radar, antennas)	5.0 m	16.4 ft
Height measured from waterline at light load (mast folded down)	2.9 m	9.5 ft
Depth of hull, without engines, in maximum load condition	0.8 m	2.63 ft

© 2026 Axopar Boats / Brabus Marine

Power

	SI units	US units
Maximum recommended engine power	3 x 224 kW	3 x 300 hp
Maximum recommended engine weight	3 x 313 kg	3 x 690 lb

Weight and loading

	SI units	US units
Hull weight (excluding engines, batteries, basic equipment)	7430 kg	16380 lb
Weight of unloaded boat with maximum weight outboard engines	8600 kg	18956 lb
Includes basic equipment (ropes, fenders, anchor)	111 kg	245 lb
Boat weight at maximum load B	11361 kg	25047 lb
Boat weight at maximum load C	11661 kg	25708 lb
Maximum recommended load B	2761 kg	6087 lb
Maximum recommended load C	3061 kg	6748 lb

Of which:

<table>
<tr><td></td><td colspan="2">Category B</td><td colspan="2">Category C</td></tr>
<tr><td>Maximum number of persons
Default weights:
• Adult: 75 kg
• Child: 37.5 kg</td><td colspan="2">12</td><td colspan="2">16</td></tr>
<tr><td rowspan="2">Total weight of all persons</td><td>SI units</td><td>US units</td><td>SI units</td><td>US units</td></tr>
<tr><td>900 kg</td><td>1984 lb</td><td>1200 kg</td><td>2646 lb</td></tr>
</table>

of which

© 2026 Axopar Boats / Brabus Marine

	SI units	US units
Personal luggage	240 kg	529 lb
Cargo on roof racks	100 kg	220 lb
Life rafts	92 kg	203 lb
Mass on transportation (excludes person weights, personal equipment)	10107 kg	22282 lb

Tank capacity

	SI units	US units
Liquid in all fixed tanks	1429 kg	3150 lb
Fuel tank (nominal volume 1390 l / 368 gal)	1321 l / 990 kg	349 gal / 2183 lb
Fresh water tank (nominal volume 2 x 150 l / 2 x 40 gal)	285 kg	628 lb
Septic tank (nominal volume 120 l / 32 gal)	114 kg	251 lb
Diesel for heater (optional, nominal volume 49 l / 13 gal)	40 kg	88 lb

The boat's stability assessment is based on maximum load conditions.

The maximum recommended load only contains the weight components mentioned above.

3.6 Boat layout

The boat has several deck options. The layout of the equipment and the technical components may vary depending on the selected accessories.

The standard boat has an open aft deck.

The front cabin of the boat is equipped with gullwing doors.

There are side balconies on both sides of the boat. The side balconies can be lowered down to expand the deck area.

© 2026 Axopar Boats / Brabus Marine

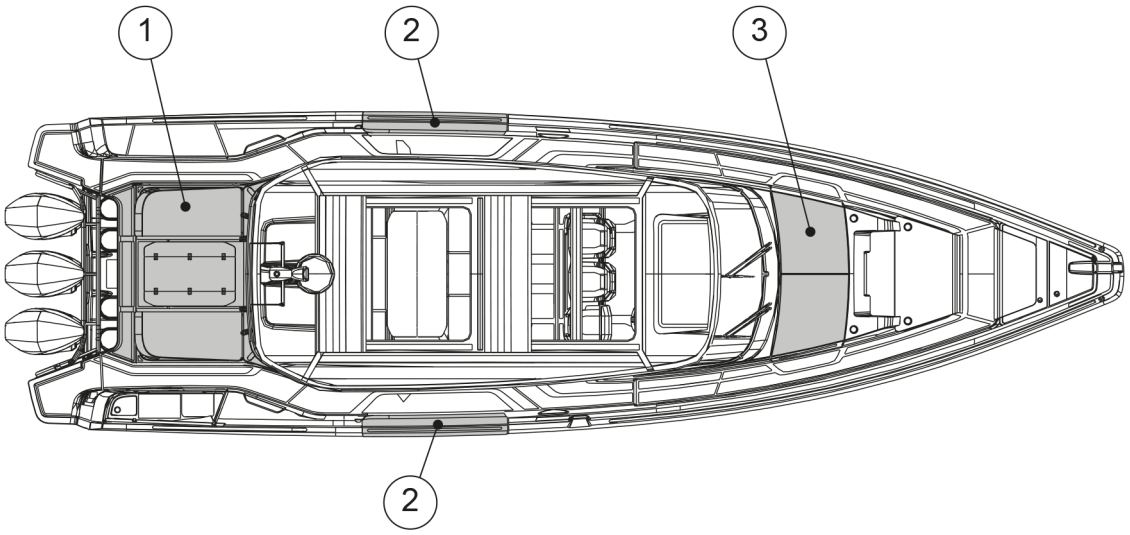

(1) Aft deck
(2) Side balconies
(3) Gullwing doors

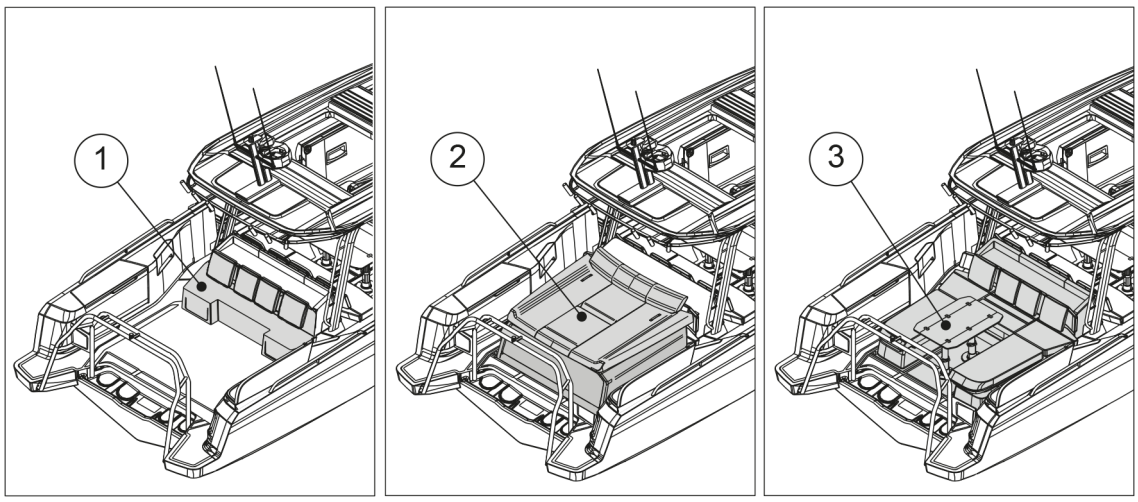

(1) Aft deck bench
(2) Aft cabin
(3) U-sofa

© 2026 Axopar Boats / Brabus Marine

4 Product description

4.1 Stability and buoyancy

Pay attention to the stability and buoyancy of the boat.

All weight dispositions (for example installing a fishing tower or radar, and engine replacement) can have a significant impact on the stability, trim, and performance of the boat.

- The bilge water level needs to be kept at a minimum.
- The stability of the boat is compromised if any weight is placed in a high position.

In stormy weather, all hatches, compartments and doors must be kept closed to minimize the risk of flooding.

Breaking waves represent a significant danger to stability.

⚠ WARNING To avoid the risk of flooding, always keep the seacocks closed when not in use (for example, the seacock for the toilet's flushing water).

4.1.1 Draining

The boat is designed to drain rain and splashing water through the open and flat aft deck. Do not block open aft deck with equipment or load.

The system is built so as to drain the water from the deck in normal use. Do not close the taps when using the boat or when the boat is attached to the dock.

NOTICE The self-emptying open space is meant for the removal of such water that ends up on the deck through rain, splashing or from breaking waves. A part of the rain water as well as water condensation in the bilge may end up in the bilge.

- Do not leave the boat unattended in the water for a long time.
- Observe the floating position of the boat and empty the bilge when necessary.

Leaving the boat unattended in the water for a long time may cause damage.

4.1.2 Openings in the hull and deck

There are several inlets through the boat with valves for opening and closing them.

- Keep the inlets closed if the boat is out of use for a long time, and open them when the boat is taken into use again.
- Keep the inlets open in rainy conditions or if the boat is lifted out from water.
- Always check that all hatches are securely closed before and after using the boat.

© 2026 Axopar Boats / Brabus Marine

- Keep the windows, doors, deck hatches, roof hatches, vents and interior doors closed while driving.

  In stormy weather, always keep them securely closed to minimize the risk of personal injuries and water getting into the boat.
- In certain conditions and speeds, it is possible that water is sprayed inside through canopies, hatches or other openings, due to negative pressure or other effects.

  Risk for this can be minimized by closing the canopies, hatches or other openings.

To prevent water intrusion, please make sure the radar mast is protected if it is left in folded position during storage.

⚠ WARNING Keep all doors and hatches shut while driving the boat.

The figure shows the hatches that must be kept closed while under way or when the boat is left unmanned.

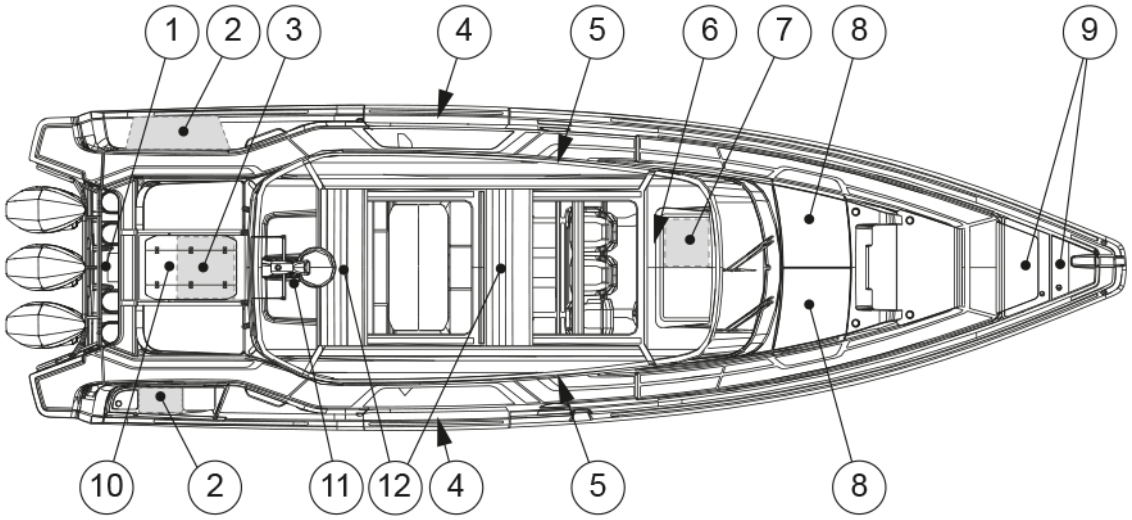

(1) Inspection hatch in the engine well
(2) Fender box hatches
(3) Storage hatch
(4) Side balconies
(5) Main cabin doors
(6) Front cabin door
(7) Septic system outlet valve
(8) Front cabin's gullwing doors
(9) Bow storage box hatches
(10) Raw water pickup
(11) Radar mast
(12) Openable roof

© 2026 Axopar Boats / Brabus Marine

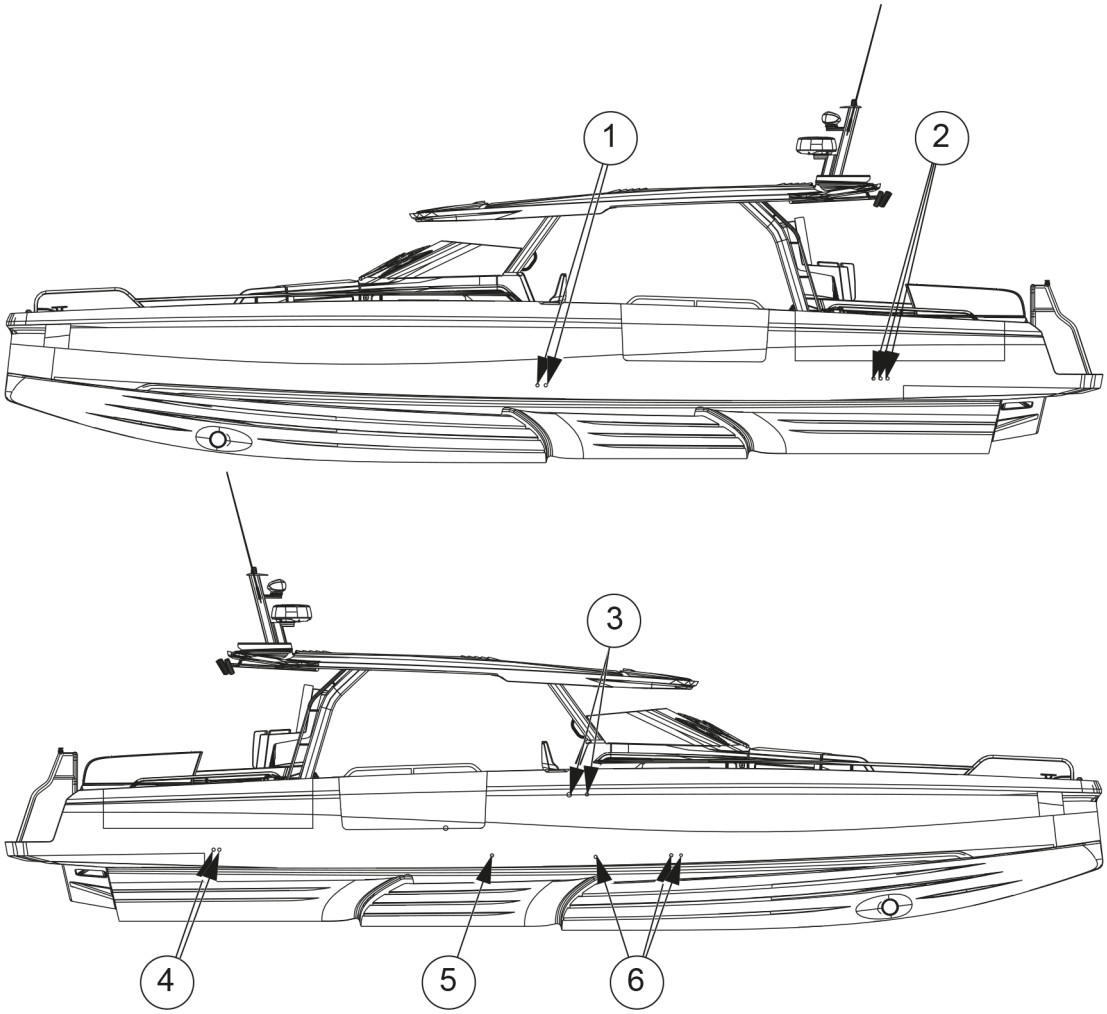

(1) Bilge outlets
(2) Grey water outlets
(3) Fuel tank vent
(4) Waste water tank vent
(5) Grey water wetbar
(6) Grey water out bow

The location and number of these openings depend on the level of the equipment on the boat.

4.1.3 Bilge system

The bilge system is designed to enable keeping the bilge water level at a minimum. The system consists of several pumps that cover all the lower sections of the boat.

The boat is equipped with both manual and electric bilge pumps.

The manual bilge pump is controlled with its handle.

The submersible electric bilge pumps are equipped with a float which triggers them automatically if there is water in the bilge space. The electric bilge pumps can also be controlled manually from the switches on the steering console.

© 2026 Axopar Boats / Brabus Marine

⚠ WARNING

The bilge system is not designed for damage control.

The combined capacity of the bilge system is not designed to pump out the boat in the event of hull damage.

NOTICE

Keep the bilge area clean by washing it ever so often using bilge cleaner or biodegradable soap and water. Clean bilge significantly helps noticing signs of leaks or other problems that may occur.

NOTICE

- Check the functionality of the bilge pumps regularly by manually activating them.
- Remove any waste from the intakes.
- Clear the pump outlets from debris.

NOTICE

Do not run the pumps dry for a long time. The pumps will be damaged.

NOTICE

Avoid pollution.

Since the bilge system comprises of several automatic and manual pumps that cover all areas of the boat, the risk of accidental discharge of contaminated water by automatic pumps needs to be minimized.

Mitigate the risk by checking the bilge water regularly for contaminants such as oil, diesel, and glycol.

Before every use

Make sure that:

- The bilge pumps can operate freely, and there are no objects blocking operation.
- Water can flow through the strainer, and there is no muck or material restricting the water flow.

  Clean the strainer by pushing the lock tabs in the pump motor and lifting the motor unit off.

4.1.3.1 Bilge pumps and outlets

Bilge pump output

The manual bilge pump output is 33 liters (9 gallons) per minute.

The automatic bilge pump output is 34 liters (9 gallons) per minute.

When replacing bilge pump, ensure minimum capacity requirement is fulfilled.

Bilge pump locations

The manual bilge pump's control handle is located in the port side stowage casing of the aft deck.

The electric bilge pumps are submersible. Two electric bilge pumps are located under the berth of the aft cabin or under the storage hatch. Another electric bilge pump is located under the front cabin floor.

© 2026 Axopar Boats / Brabus Marine

The electric bilge pumps are by default in the automatic mode and pump out the bilge once the float-switch is triggered. The electric bilge pumps can also be started manually from the boat's main control panel.

One bilge pump is located in the technical space. It is operated from the technical space control panel.

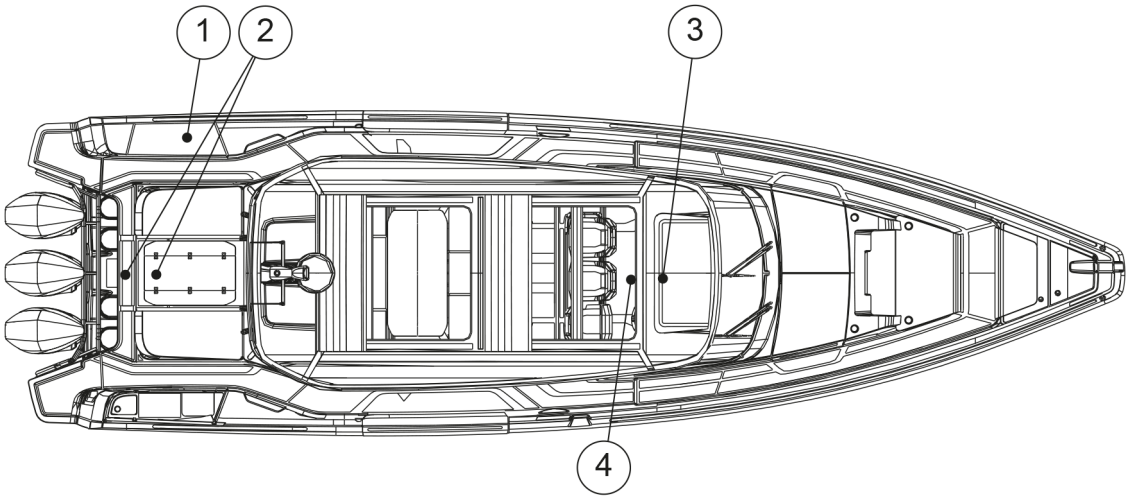

(1) Manual bilge pump
(2) Aft electric bilge pumps
(3) Front electric bilge pump
(4) Technical space control panel and bilge pump

4.2 Technical systems

4.2.1 Electrical system

⚠ WARNING

Risks of fire, explosion and electric shock!

Improper use of electric DC and AC systems may result in fire or explosion.

Improper use of electric AC systems may result in electric shock.

Follow the instructions carefully.

© 2026 Axopar Boats / Brabus Marine

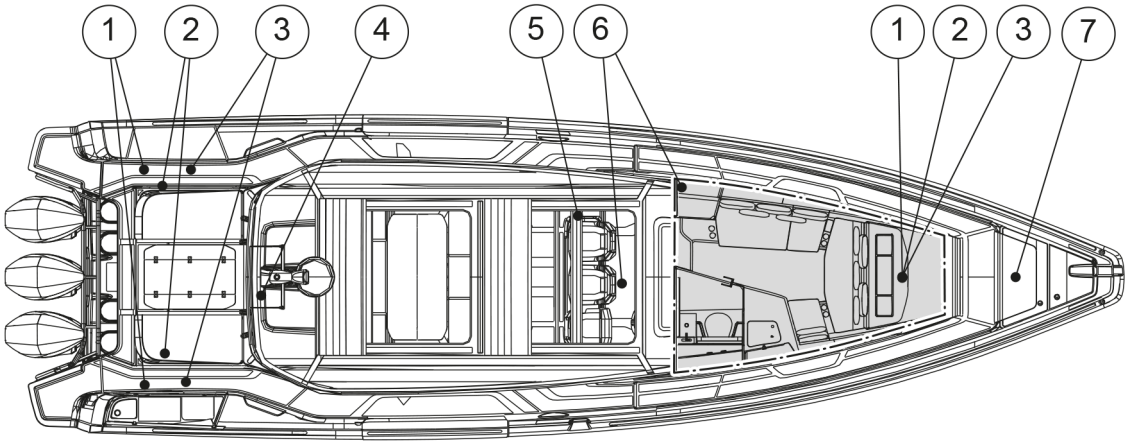

(1) High-current fuses
(2) Main switches
(3) Batteries
(4) Shorepower charger and fuses
(5) Remote controllers for main switches
(6) Fuse panel
(7) Shorepower socket

4.2.2 12V system

Most of the boat's equipment uses the 12V system.

The 12V system consists of engine driven alternators, battery chargers for shore-side electricity, batteries and equipment.

The power is supplied to the batteries via diodes from either the engine alternator or the shore power charger.

To activate the circuits in the 12V system, the main switches for the corresponding circuits need to be activated and the fuses intact. When the electronic circuit is switched on, the equipment can be operated from the main switch panel.

⚠ WARNING

- Never switch off the main switch when the engine is running, because this may cause damage to the alternator.
- Never carry out electrical installations when the power is switched on.
- Never modify the boat’s electrical system or diagrams. Service and maintenance must be carried out by a qualified electrician.
- Never alter or modify the rated amperage of the overcurrent protective devices.
- Never install or replace electrical equipment with components that cause the circuit’s nominal rated amperage to be exceeded.
- Never leave the boat unattended with the electrical system energized, except automatic bilge pump, fire protection, and alarm circuits.
- Maintain any damaged equipment before taking it back to use.

© 2026 Axopar Boats / Brabus Marine

4.2.3 Main switches

The different electronic circuits of the boat are controlled by the main switches.

The main switches allow the batteries to be disconnected from all devices that consume electricity. When the main switches are in the **On** position, the current is conducted to the distribution board and from there to different parts of the boat.

When the remote switches are active, the text **On** is visible and a led above the text is illuminated.

Devices that constantly need current are active regardless of the position of the remote switches.

The design drawing of the boat's electrical system is presented in appendix ***Electrical diagrams***. The location of the main switches is presented in the section ***Electrical system***.

Power supply to the engines and devices is enabled by pulling the Start or Service switch to the lower position and pressing the **On** button. There is a remote switch for each engine and one switch for the service batteries. The optional bow thruster or windlass has a separate remote switch.

The manually operated main switches are located under the aft deck, behind hatches. These switches are only for emergency use. In normal situations, use the switches in the steering console.

Current is fed to the engine by sliding the Start switch to the **On** position. The current feed to other equipment is achieved by sliding the Service switch to the **On** position, and feed to the bow thruster and windlasses is achieved by sliding the Aux switch to the **On** position.

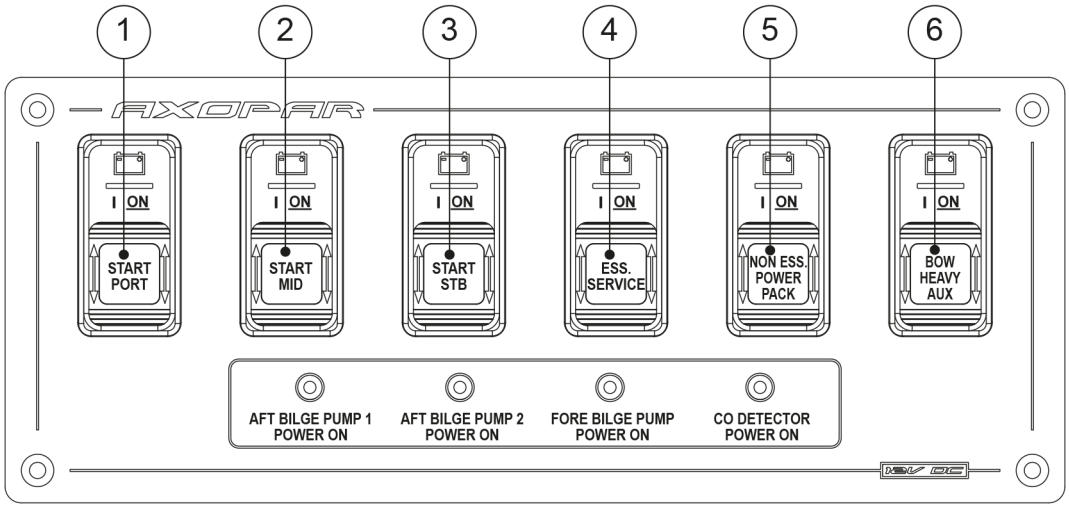

(1) Port (PORT) engine battery
(2) Middle (MID) engine battery
(3) Starboard (STB) engine battery
(4) Service battery
(5) Power pack battery
(6) Heavy-duty auxiliary battery

© 2026 Axopar Boats / Brabus Marine

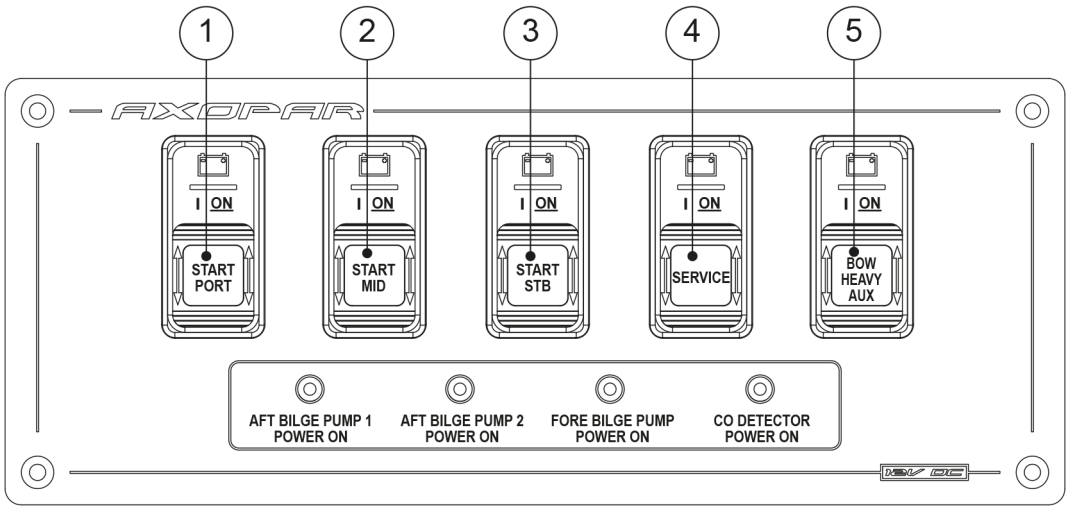

(1) Port (PORT) engine battery
(2) Middle (MID) engine battery
(3) Starboard (STB) engine battery
(4) Service battery
(5) Heavy-duty auxiliary battery

4.2.4 Direct supply fuses

Some of the devices in the boat are supplied by direct supply switches. Direct supply switches are intended for such equipment that need current when the main switches are turned off.

When pushed down, the switch is on and when pushed up it is off. The switch indicates a short circuit or interference in the electronic circuit by springing up to the **Off** position. The switch can be reconnected by pushing it back down to the **On** position. Do not reconnect the switch before you have found out the reason for the interference.

The direct supply switches must be left on even if the current from other circuits is switched off. An appliance that is switched off too early may cause the appliance to overheat and become damaged.

⚠ WARNING

Turning the direct supply switch off too early may cause the device (for example, the heater) to break or catch fire, because the devices have a ventilation feature that works even if the device is otherwise switched off.

- Make sure the device is cooled down before turning it off completely. For more information, see the manual of the device in question.

4.2.5 Fuses

The fuse panel includes fuses for the boat’s equipment.

The fuses are in the form of trip switches that break the circuit and spring up when tripped. Do not reset the switch before you have found out the reason for the breaker tripping. After that press the switch back down.

© 2026 Axopar Boats / Brabus Marine

⚠ WARNING Before connecting an electric circuit, make sure that the circuit is not damaged and that there will be no short circuit or a fire caused by possible damages in the electric circuit. Any damaged equipment must be maintained or changed before they are again taken into use.

4.2.6 Heavy duty fuses

There are fuse panels containing fuses for appliances and electronic circuits which require large currents, such as windlasses, in the boat.

The bow thruster's and windlasses' high current fuses are located under the front cabin berth and the battery charger fuses are located on starboard side in the stern.

The functioning of fuses can be checked from the holes in the fuse's cover. If the metal strip visible in the hole is unbroken, the fuse is operational.

If the metal strip is damaged, meaning that an overload has occurred, contact a qualified nautical electrician.

⚠ WARNING Opening the cover is not recommended, as there is a danger of electric shock and serious injury.

If the metal strip is damaged, contact a qualified nautical electrician. If it is necessary to open the cover, make sure that all the current cables from the batteries are disconnected.

4.2.7 Batteries

The boat is equipped with three start batteries, one for each engine. The start batteries supply current to the engine and engine-related equipment and the service batteries for other appliances and equipment on the boat.

The number of service batteries depends on the selected optional equipment.The dual battery system has been designed and built so that the boat's engine starts even if its service battery is empty. When the dual battery system has been installed, the start battery only supplies current for the engine system. All other power consuming devices have been connected on to service battery. The batteries are charged by the engine alternator. Charging of the batteries is arranged so that the start batteries are always prioritized. Once the start batteries are full, charging of the service batteries starts automatically.

The batteries are located in the aft of the boat. The exact location of the batteries is presented in the section ***Electrical System***.

⚠ WARNING Only use maintenance-free batteries in the boat.

- When you leave the boat, switch off the current from the main switch.
- Remove the batteries from the boat for winter storage.
  - When removing a battery, detach the negative pole first.
  - When disconnecting batteries, be careful not to touch both poles at the same time with a metal tool.

© 2026 Axopar Boats / Brabus Marine

4.2.7.1 Charging the batteries

⚠ WARNING

- Make sure that the battery compartment is always well ventilated when charging batteries.
- Only charge batteries in the boat with the boat's own chargers. In other cases, remove the batteries from the boat.
- Remember that the batteries discharge an explosive oxy-hydrogen gas at a voltage of 14.4 volts.
  - The voltage of a normal battery in unloaded status is 12.3-12.7V.
  - During charging, the voltage increases and the charging regulator stops the charging process automatically at a preset level.
  - The voltage measurement must be taken at the battery terminals, not the alternator, to achieve the correct result.

4.2.7.2 Winter storage

For winter storage, the batteries can be left on board only if they are fully charged.

A partially discharged battery can freeze and crack. Always disconnect the cable terminals from the battery to avoid oxidation. When removing batteries, disconnect the negative pole first and make sure that there are no flammable or explosive materials or liquids nearby. When putting the batteries back in place, connect them in reverse order (positive pole first).

4.2.7.3 Cleaning the batteries

The top of the batteries needs to be cleaned regularly to avoid current leakage between the cells. If the battery is located in a separate area, it is normally sufficient to clean it in the spring and autumn.

Make sure that the air holes in the cell plugs are open so that gas can be vented.

The terminals and cable terminals must be lubricated to prevent deposits and corrosion.

4.2.8 110/230V system

You can choose to equip your boat with the optional 110/230V AC system with a shore power connection, which will allow you to use devices that run on the standard mains current.

The system obtains its power from an external supply on shore or from the jetty (shore power). In the European market the system used is 230V and in the American market 110V.

The system functions when a shore power cable has been connected to the shore power socket connection.

1. Turn off the shore power switch before connecting or disconnecting the cable.
2. Connect the shore power cable to the boat before connecting it to the shore power.
3. Disconnect the shore power cable from the shore power before disconnecting from the boat.
4. Close the hatch of the boat’s shore power connection.

© 2026 Axopar Boats / Brabus Marine

⚠ CAUTION Unplug the shore power cable before starting the engines. Starting the engines with the shore power cable connected may break the battery isolators.

The system's main fuse is located in a separate control panel. The system includes a battery charger, which starts charging batteries automatically when the boat has been connected to shore power. The location of the components is presented in the section ***Electrical System***.

The shore power system needs to be checked at least biannually. Always disconnect the shore power cable when the system is not in use. Metal casings of installed electrical equipment must always be connected to earth in the boat electrical system. Use electrical equipment equipped with earth protection only.

⚠ DANGER Risk of electric shock and fire!

- Do not touch an energized high voltage system.
- Do not change the plug of the shore power cable. Use compatible connectors only.
- Try to minimize the risk of electric shock, short circuit and fire.
- Do not allow the shore power cable to hang in the water. If it does, a hazardous electric field could be created in the water.
- Never modify the connections on the shore power cable. Use compatible connectors only.
- If the earth fault breaker is tripped, disconnect the shore power cable immediately. In such a case contact a qualified electrician for repairs before the system is used again.

⚠ DANGER To avoid an electric shock and risk of fire:

- Switch off the shore power switch before connecting and disconnecting the cable.
- Connect the shore power cable to the boat before connecting it ashore.
- Disconnect the shore power cable ashore before disconnecting it from the boat.
- Close the hatch to the shore power socket on the boat carefully, avoiding getting it wet.

4.2.9 Fuel system

The boat has a fixed fuel system and a water-separating fuel filter on the suction line.

The EPA (United States Environmental Protection Agency) fuel system complies with the NMMA (National Marine Manufacturers Association) certification rules.

See the fuel system drawing in appendix ***Fuel system***. For care and maintenance of the fuel system, see the instructions in the engine manual.

⚠ WARNING Never start the engines if there is strong gasoline odor present.

© 2026 Axopar Boats / Brabus Marine

⚠ WARNING

Do not smoke or handle open flames when refueling.

Remember that it is not allowed to store fuel in spaces not specifically designed for it. Since there is no ventilated storage space on this boat, possible spare fuel cans must be stored on deck.

Fuel system component locations

- The fuel tank is located in the middle of the keel. Prevent damage to the fuel lines.
- The inlet pipe for fuel is located in the starboard side of the deck.
- If the boat has been equipped with an extra diesel tank, the inlet fitting is located next to the fuel inlet.

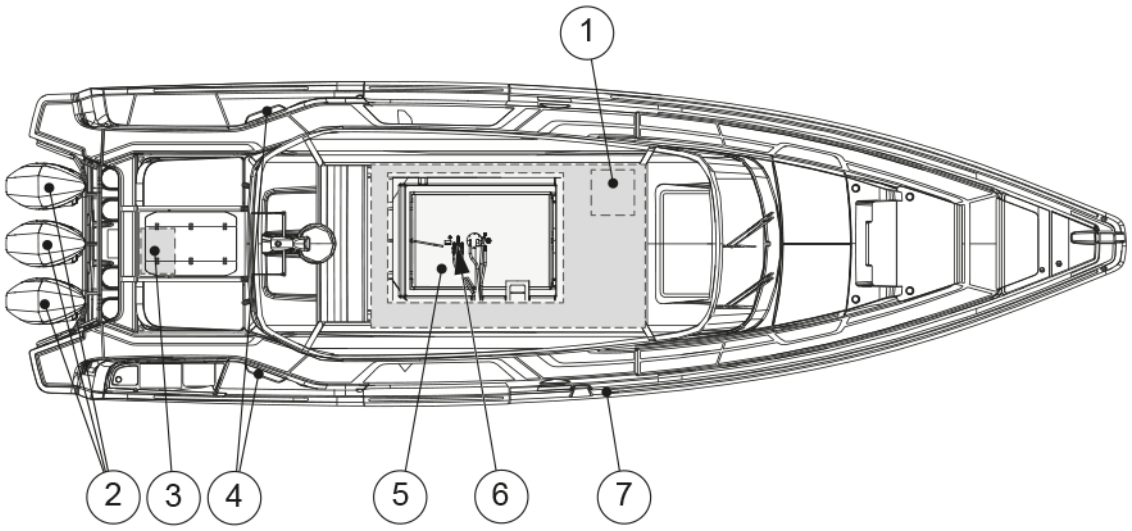

(1) Diesel fuel tank (with optional heating system)
(2) Engines
(3) Fuel filter cabinet (350 hp and 400 hp V10 engines only)
(4) Fuel tank compartment ventilation openings
(5) Fuel tank
(6) Shut-off valve
(7) Fuel inlet

4.2.9.1 Refueling the boat

The boat's engines run on gasoline. Optional heater system uses diesel fuel.

Before refueling, stop the engine and any electrical equipment. Make sure that the boat is securely docked.

Wet down the composite decks with water before refueling. This ensures that any fuel spillage will float on the water and not penetrate the decking material.

Never leave the nozzle unattended during fueling. The nozzle will automatically shut off when the tank is full. Do not try to top off or overfill the tank.

© 2026 Axopar Boats / Brabus Marine

After refueling, make sure the tank cap is properly closed. Before starting engines, ventilate areas where gasoline vapors may have accumulated.

Water reaching the engine's injection system can cause rapid corrosion damage to the precision components in the injection pump components. For this reason, it is vital to check the extra fuel filter regularly for water. Every so often, drain a small quantity of fuel into a suitable container (avoid fuel spillage) and check that there is no condensation water. If there is water in the filter, continue to drain until only clean fuel appears.

The fuel system on the engine is sensitive to air bubbles in the fuel. Always fill the tanks well before they are completely empty. If the system has been run dry, it must be bled before the engine can be started again. See the engine manufacturer's instruction manual before bleeding the fuel system.

⚠ WARNING

- The fuel system grounding is effective only when the boat is in the water and the system is filled using the nozzle. If filling from canisters, only use plastic containers and pay attention to not overfilling the system. Do not top off.
- Never block access to safety equipment, fire extinguishers, fuel valves or main power switches.
- Never block any ventilation openings made in the boat because their purpose is to clear the air of fuel fumes.
- Never use a wrong type of fuel in the heater or cooker as this may damage them.
- Never use an open flame when detecting leaks.

4.2.9.2 Maintaining the fuel system

Follow the engine manufacturer’s maintenance schedule.

- Annually, check the condition of the hoses and make sure that there are no visible cracks, abrasion, or deterioration.
- Replace worn parts with genuine, marine-grade parts only.
- Bi-monthly, inspect the fuel system for presence of water in the fuel tank.

  Presence of water in fuel can be checked by inspecting the contents of the fuel filter.

  If any water is found, it must be removed and the whole fuel tank dried before the tank can be refilled with fuel.
- Examine the fuel tank and lines for corrosion and leaks.

Bi-annually and for winter storage, check the fuel tank compartment for possible accumulated water as follows:

1. Insert a thin hose through the aluminium pipe at top of the tank. The pipe guides the hose to the lowest part of the fuel tank compartment.
2. Connect a wet-dry vacuum cleaner to the hose.
3. Empty the compartment.

© 2026 Axopar Boats / Brabus Marine

4.2.10 Septic system

The boat's septic system consists of the toilet seat, the septic tank and the related systems.

The optional aft cabin can also be equipped with a toilet seat.

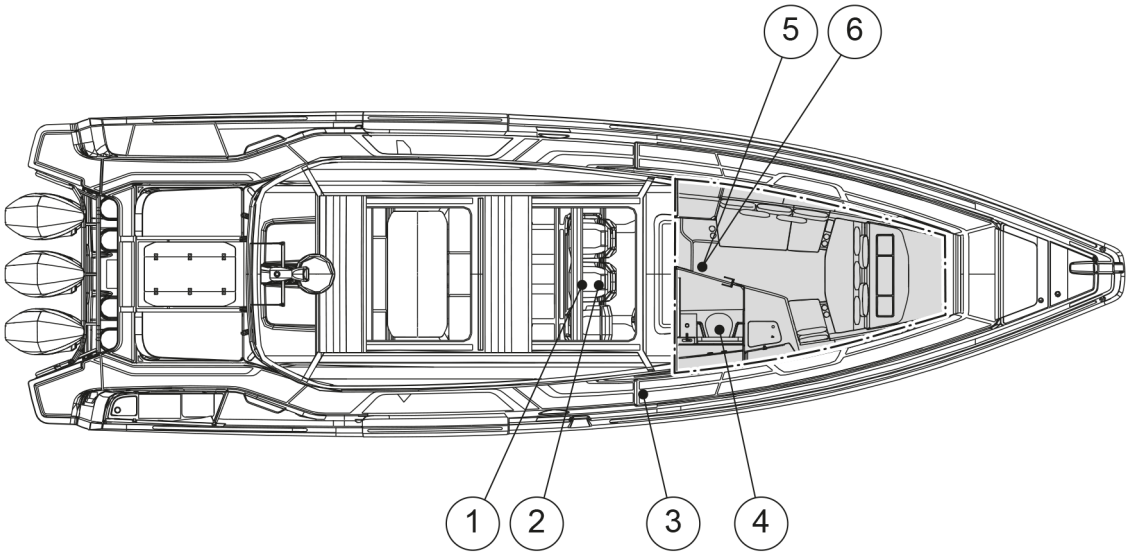

(1) Septic tank
(2) Macerator pump
(3) Deck suction fitting
(4) Toilet
(5) Shower sump pump
(6) Septic tank seacock

Maintaining the macerator

The macerator pump can get stuck if it is not used for extended periods of time. Regular use of the macerator helps to prevent this from happening.

If the macerator pump gets stuck, please contact your dealer for repairs.

4.2.10.1 Toilet seat

The boat is equipped with an electrical toilet seat system that uses fresh water.

NOTICE

- Never put any other objects but toilet paper in the toilet.
- In order to avoid damages, you must also not pour hotter than lukewarm water into the toilet.
- It is under no circumstances allowed to flush paper towels, fabric or rubber products, hard objects, oil products or solvents down the toilet.

© 2026 Axopar Boats / Brabus Marine

Using the electrical toilet

The electrical toilet is used with a separate operating switch. For more information on the device, see the manual for the toilet.

Maintaining the toilet

- Clean the toilet with a mild cleaner.
- Never use cleaning agents or deodorants which contain pine oil, formaldehyde or chlorine, nor corrosive or petroleum-based agents.

  These materials can damage the plastic and rubber parts in the toilet.
- Lubricate the pump shaft with Vaseline to increase the service life of the seal.
- Flush the toilet system thoroughly with fresh water when the boat is not in use.

4.2.10.2 Septic tank

Avoid environmental pollution!

The blackwater tank is fitted with a deck outlet pump using an international standard type connection. Using the pump, the black water can be emptied to a permanent septic tank ashore. These facilities must always be used.

In areas where there are no permanent septic tanks, the macerator is used to evacuate the contents of the tank straight into the water as follows: Open the sealed seacock. If possible, empty the tank daily and always in deep waters far from the shore. For the location of the pump, see the section ***Septic system***.

The shut-off valve must be closed after the evacuation.

Do not allow the tank to become full. It can lead to paper becoming compacted in the bottom of the tank, making it more difficult to empty.

NOTICE

Before the boat is laid-up for winter storage, the whole system must be cleaned and flushed thoroughly while the boat is still in the water.

The whole system must be thoroughly drained of water when the boat is lifted out of the water.

This measure prevents frost damage, bacteria growth and smells.

Use of antifreeze is not recommended, since it is impossible to guarantee that it reaches all parts of the system.

4.2.10.3 Shower sump pump

The boat’s shower floor is equipped with a drainage pump.

- Switch the pump on by using the pump switch located on the fuse panel.

© 2026 Axopar Boats / Brabus Marine

Regular checks

- Clear the shower sump pump regularly of any accumulated debris and hair.
- Test that the float switch is in working order.

Before winter storage

- Empty the shower sump pump of water.

4.2.11 Bow thruster

The bow thruster enhances the maneuverability of the bow when docking or performing other maneuvers that require increased operator control.

The bow thruster is powered by the Aux battery.

The control switch is located in the steering console.

The batteries must be disconnected from the electronic circuit before changing a fuse. For more information, see the manufacturer's manual.

⚠ WARNING

Incorrect use may cause overheating and short circuiting, and pose a fire risk.

- Use the bow thruster for only short periods at a time.
- Do not exceed four duty cycles (max. 30 seconds long in 25 mins).

If overloading occurs, contact a qualified marine electrician.

⚠ WARNING

- Do not touch the bow thruster or its fuse if the Aux main switch is switched on.

⚠ DANGER

Pinching hazard

Never put your hand or any other body part near a windlass or bow roller in operation.

4.3 Optional equipment

This section presents the optional equipment and systems available for the boat.

4.3.1 Freshwater system

You can choose to equip your boat with an optional freshwater system.

The freshwater system consists of two fresh water tanks joined with connecting pipe, pump, and filter. The fresh water tank is filled via the filling cap.

The freshwater system is turned on by switching on the freshwater pump. The system maintains a working pressure automatically, which is why the pump does not need to be shut after use.

© 2026 Axopar Boats / Brabus Marine

- Switch off the system when the boat is left unmanned.
- Check the filter regularly.

Antifreeze is added during production phase of the boat, and the dealer is responsible for disinfecting the freshwater tank before sale.

NOTICE

The water from the system is not meant for drinking.

The freshwater system must be thoroughly emptied for winter storage.

It is not recommended to use any anti-freeze products in the freshwater system.

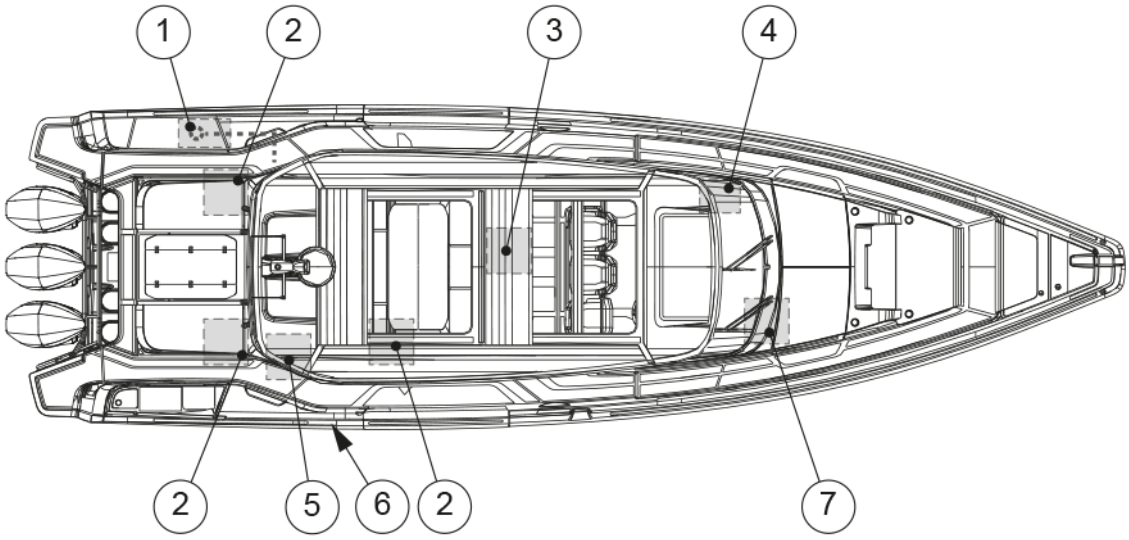

(1) Deck shower
(2) Freshwater tank (location of starboard tank in the middle, if there is aft cabin in the boat)
(3) Wet bar tap
(4) Switch for water system
(5) Freshwater pump
(6) Freshwater filling cap
(7) Front cabin tap

The water pump has air release valve which should be slightly opened to facilitate priming when starting the pump or emptying the tank. Once the pump operates normally, the valve should be closed.

© 2026 Axopar Boats / Brabus Marine

The water pump has also two LEDs indicating the operating status and faults in the pump operation. For more information about the signals, please refer to manufacturer’s manual.

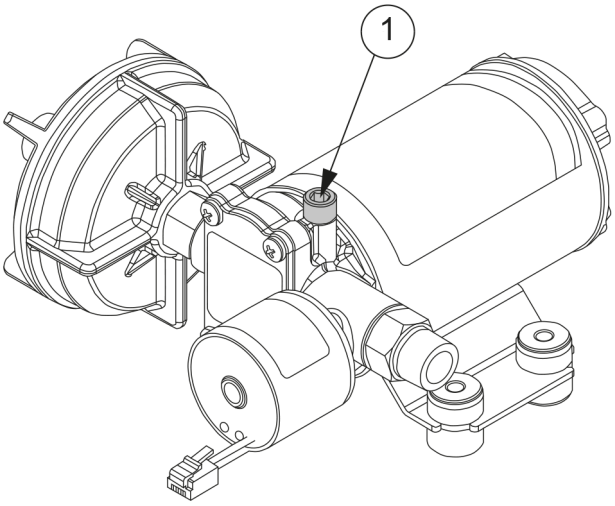

Figure 4.1 Water pump and air release valve

Freshwater system needs to be disinfected and flushed annually or after longer periods of non-use to keep the system in working order.

Disinfection procedure is described below:

1. Flush the entire system thoroughly by running potable water to flow through it.
2. Drain the system completely.
3. Fill the entire system with disinfecting solution and follow the manufacturer’s instructions.
4. Drain the entire system once disinfection process is complete.
5. Flush the entire system thoroughly several more times with potable water.
6. Fill the system with potable water. Freshwater system is now ready to be used.

Maintenance

Annually inspect hose connections, tube fittings and pump electrical wiring connections for proper securing and no chafing. Water pump inlet filter is recommended to be checked and cleaned annually. Running the system regularly helps keep the water pump’s impellers in working order.

4.3.2 Heating system

The boat can be equipped with a heating system as an optional equipment.

The heater unit is located in the technical compartment under the helmsman’s position on the port side.In addition, there are a different number of heating vents available, depending on the boat's equipment.

The heater tank is located in the aft of the boat. The filling cap for the heater tank is located in the starboard afthatch.

© 2026 Axopar Boats / Brabus Marine

⚠ WARNING

Appliances that burn fuel, consume oxygen and discharge toxic combustion products into the boat.

Good ventilation is essential when such an appliance is in use. Open ventilation holes and make sure that they are not blocked and that air flows freely through them.

- Never leave the boat unattended when the heater is in use.

NOTICE

Heater components may break if the wrong kind of fuel is used. For more information, see the manufacturer's manual.

- Do not switch off the heater's direct supply current before you have made sure that the appliance has cooled down.

4.3.3 Air conditioning

The boat can be equipped with a 230V/110V air conditioning (AC) as an optional system. Depending on the selected setup, the air conditioning allows climate control in the main cabin, the front cabin, and the aft cabin.

The optional air conditioning system consists of an air conditioning unit, a water pump, a strainer, a water intake valve and a ducting arrangement.

The air conditioning is controlled by control panel displays located in the main cabin and front cabin. When you set the desired temperature from the control panel displays, the unit automatically activates when the ambient temperature goes over or under the set value.

Before starting the unit:

- Ensure the sea water intake valve and the sea water outlet valves are open. The location of the valves is presented in the section **Openings in the hull and deck**.
- Ensure that the air conditioning circuit breaker is switched on.

NOTICE

Running the air conditioning unit when the water intake valve is shut can cause the unit to overheat and get damaged.

© 2026 Axopar Boats / Brabus Marine

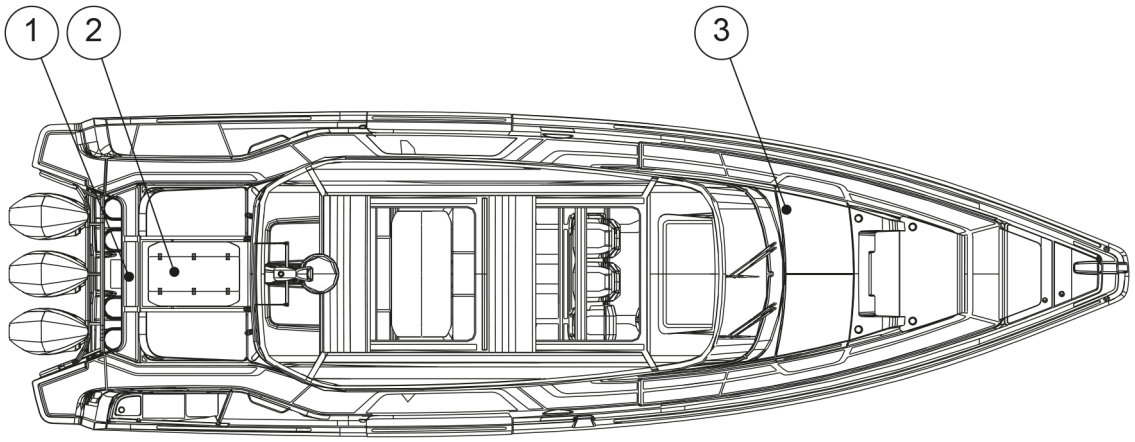

(1) Optional AC water intake valve
(2) Optional AC water pump and strainer
(3) Optional AC unit

Maintenance

- Check and clean the air filter near the air conditioning unit monthly.
- Inspect the sea water circuit regularly for leaks.
- Inspect the electrical wiring and electrical connections annually for corrosion and firm seating.
- Coolant refills should be performed by a certified service provider.

Refer to the supplier’s manual for complete operations, maintenance, and warranty instructions. In case of the air conditioning unit fails, please contact your boat dealer.

4.3.4 Navigation system

Your boat can be equipped with multifunction displays (MFD).

Depending on the boat configuration, the boat is equipped with single or multiple screens.

The multifunction display can be used to show electronic charts, plot courses, and navigate the boat. It also acts as interface for marine electronics and other digitally enabled equipment on board.

Refer to the supplier’s manuals for complete user instructions and maintenance instructions of these functionalities and equipment.

4.3.4.1 VHF equipment

VHF radio allows instant communication between your boat and other boats, marinas, bridges, and maritime authorities.

The VHF radio is the recommended means of communication on the coastal waters, and it transmits messages on high frequency waves. The VHF system consists of a VHF radio unit near the drivers position and a radio antenna located either on the mast or on the roof of the boat depending on the boat model.

© 2026 Axopar Boats / Brabus Marine

Study the provided booklet for the local regulations and the functionalities related to the use of the VHF system.

For your safety, make sure the VHF system is operational before going out to open sea.

4.3.4.2 Radar

Use the radar in poor visibility conditions, such as fog, rain, or darkness. The radar helps to identify shorelines, fixed obstacles, and other vessels, and to assess their distance and bearing. Effective use of the radar requires that the operator is familiar with the device's operation and settings in order to interpret observations correctly.

For safety reasons, it is important to remember that the radar is an aid and does not replace visual observations or good seamanship. The radar display should be monitored regularly; however, a continuous lookout must also be maintained.

4.3.5 Anchor windlass

The boat can be equipped with a bow, and in some cases aft, anchor windlass (optional equipment).

Operation

To operate the windlass, windlass breaker must be switched on.

Windlass is operated with a momentary switch. Pushing the up button will raise the anchor and pushing the down button will lower the anchor.

If there is a loss of power to the windlass, check the windlass breaker to see if it needs to be reset. If the breaker keeps tripping after it has been reset, the anchor windlass system is recommended to be inspected by a qualified electrician.

The anchor windlasses are powered by the Aux battery. The battery and its fuse are located in the bow of the boat.

⚠ WARNING

- Do not touch the anchor windlass or its fuse if the main switch Aux is switched on.
- Even if the current is switched off, do not change the windlass fuse. The high current may cause a fatal electric shock.

Manual operation

In case of loss of power, the windlass can be manually operated by disengaging the clutch. Please refer to the manufacturer's manual how to operate the windlass manually.

Before using the anchor windlass

Always check that:

- The windlass is in working order.
- The anchor chain can move freely.

© 2026 Axopar Boats / Brabus Marine

- The anchor and the chain cannot damage the boat when lowered.
- The anchor and anchor chain cannot hit any person.

For more information, see the manufacturer's manual.

While under way

The anchor windlass must be fixed mechanically to prevent it from coming loose when the boat is moving. For more information, see the manufacturer's manual.

⚠ WARNING

Pinching hazard

Never put your hand or any other body part near a windlass or bow roller in operation.

⚠ WARNING

If the windlass loosens when the boat is moving at great speed, it may cause great damage to the boat, its passengers and outsiders.

- Always fix the anchor windlass mechanically in place before getting under way.

⚠ WARNING

- Keep all body parts and clothing away from an activated windlass.

NOTICE

- Do not use the windlass to pull or tow another vessel.

Maintenance

Salt deposit accumulating on the windlass should be washed away with fresh water regularly to prevent corrosion. For more information, please refer to the manufacturer's manual.

4.3.6 Solar panel trickle charger

The boat can be equipped with solar panel trickle charging system. The system allows you to maintain and slowly charge the batteries on the boat.

The solar panel is located on the bow end of the roof. The trickle charging system includes a charge controller, preventing battery overcharge. The charge controller is installed in the battery compartment wall.

Maintenance

Ensure that the solar panel is mounted properly. Check for any dirt, debris, and corrosion on the panel. Periodically clean the solar panel with water.

Do not use chemicals, as they can damage the panel.

© 2026 Axopar Boats / Brabus Marine

4.3.7 Roof racks

The boat can be equipped with roof racks.

Roof racks allow for transportation of bulkier objects such as kayaks or bicycles. Objects put on the roof racks must be secured tight to prevent them from falling off or damaging the boat's roof or other components.

Load limit of roof racks is 25 kg / 55 lbs per roof half. Max. load of roof racks is 50 kg / 110 lbs.

4.3.8 Full RGB lighting package

The boat can be equipped with optional full RGB lighting package. The package includes deck lights, LED strip lights, and underwater lights which are controlled via the chart plotters and/or auxiliary control panels onboard the boat.

The full RGB lighting pack allows the personalization of vessel's appearance by selecting the color and intensity of lighting in the vessel. The system is designed for integration with the vessel's multifunctional display (MFD), enabling control of the lights through a dedicated control app.

To operate the lights, use the designated app on the multi-function displays or control panels, which provide an interface for adjusting colors, brightness, and lighting patterns.

The app also allows for the creation of custom lighting scenes, allowing for quickly switching between presets to match the occasion.

Maintenance

Regularly inspect all light fixtures for signs of corrosion or damage, especially after exposure to harsh weather.

Clean the lights with a soft, damp cloth to prevent salt buildup, which can lead to corrosion.

4.3.9 Sunshades

The boat can be equipped with canvas sunshades to provide shade in the aft and bow of the boat.

The sunshades are only for stationary use and must be stowed away before the boat is driven.

Depending on the boat model, the sunshade poles are stored in spring clips on top of the roof or inside a hatch.

Setting up a sunshade

1. String the loops of the sunshade to the ends of the support poles.
2. Mount the support poles on the gunwale sockets.
3. Connect the canvas clasps to the D-rings on the roof.
4. Adjust the tightness of the sunshade so that it's tight.

© 2026 Axopar Boats / Brabus Marine

4.3.10 Canopy

Optional canopy extends the sidewalls of the console. The canopy has plastic see-through windows, and keeps you dry during rain.

The canopy is mounted on the track running around the ceiling close to the edge. The bottom of the canvas is fastened to the male snaps on the hull and deck.

It is recommended to let the canopy dry before it is stored to avoid growth or unpleasant odors forming.

4.3.11 Axopar connectivity

Axopar Connect app and Axopar Connectivity hardware is available as an option on your boat.

This option provides remote monitoring capability and recording of boat usage as trip logs.

Data sources used for the remote monitoring functionality are the dedicated GPS receiver connected to the Axopar Connectivity hardware and the sensor data from the boats NMEA 2000 network (i.e. engine data).

The system also monitors the operation of the bilge pumps and alerts the user if bilge pump is activated either automatically or manually while underway or when the boat is docked.

System will also alert in case bilge pump runs for an extended period and a certain time threshold has been exceeded.

Notifications for the bilge pump operation are saved in the mobile app’s notifications section.

© 2026 Axopar Boats / Brabus Marine

5 Transportation

5.1 Lifting the boat

Lift the boat only with a lifting beam and lifting straps. Use the specified locations for the lifting straps.

Commission only a reputable lifting company or a boat yard with sufficient lifting capacity to lift the boat. Make sure the company has full insurance cover, in case of any damages.

⚠ DANGER

Risk of serious injury or death by falling load.

- Do not stay under the boat when it is hanging in the crane.

Lift straps may slip on the hull. When appropriate, tie the straps together before lifting.

The position of the straps may need to be adjusted depending on how the boat is loaded.

In addition to the boat's own weight, take into account the equipment and other possible loads in the boat.

⚠ CAUTION

Note the location of the log transducer to avoid damaging it.

- Protect the hull sides well to avoid damages.

The lifting beam must be exactly the same width as the boat. Always take great precautions near and around the boat when lifting.

⚠ CAUTION

Risk of damage to the hull.

Do not lift the boat with a forklift.

The location of the lift straps is indicated in the figure.

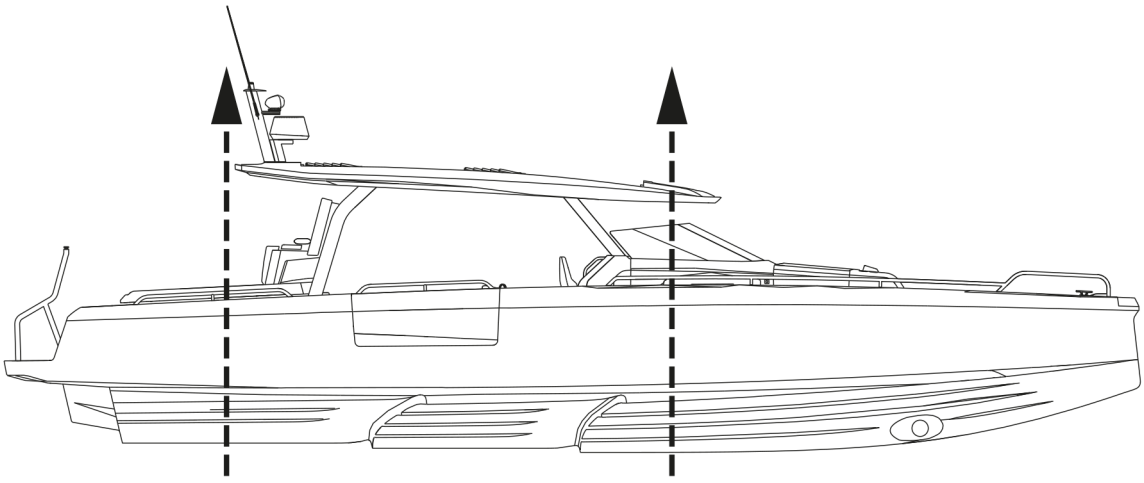

© 2026 Axopar Boats / Brabus Marine

Before operating any lifting equipment:

- Check and determine applicability of federal, state, or local requirements.
- Follow the lift equipment manufacturer’s requirements and recommendations.
- Check the boat's lift points, weight and other information.
- Straddle lift operation is a highly technical area that requires trained and experienced operators.

During lifting:

- Check the boat for bilge water before lifting.

  Excessive quantities of bilge water can shift, changing the balance of the load.
- Check for thru-hull appendages such as knot meters and stabilizers, rub, spray, and splash rails, so that they are not damaged by the lifting equipment.
- Check the hull structure to locate shafts, rudders, struts, and the forward and aft ends of any keels.
- Check the hull’s structural configuration, including the location of bulkheads, stringers, engines, and tanks.
- Check bilges for water ingress following launch.
- Transport the boat as close to the ground as practicable.

5.2 Transporting and storing the boat

Before lifting the boat onto the trailer, make sure that the trailer is suitable for the boat.

Make sure that there is a sufficient number of supports to distribute the weight properly without excessive point loads, and the capacity and dimensions of the trailer are sufficient to carry the boat and its engines, equipment, battery, boating accessories and fuel on board. Pay special attention to exposed areas and edges of hull, such as spray rails and steps in the hull, during loading, deloading and transportation.

⚠ WARNING

A boat trailer that does not have sufficient capacity or that is poorly maintained can become damaged and cause a danger on the road.

- Make sure that the trailer capacity is sufficient to also carry the weight of the engines, fuel and equipment.

⚠ CAUTION

The hull of the boat can be damaged if there is an insufficient amount of supports on the trailer or during the storage.

The trailer must be a little nose heavy. Make sure that the boat is securely fastened to the trailer, that it cannot move into any direction, and that the side supports provide an even support for the weight of the boat.

Before loading the boat on the trailer:

- Remove any unnecessary weight from the boat.
- Drain the bilge water.

© 2026 Axopar Boats / Brabus Marine

- Adjust the side supports of the trailer so that the most weight rests on the keel supports, and the side supports only offer lateral support.
- Protect the boat by placing suitable padding between the tie down straps and the boat, if necessary.
- See the engines manual for any instructions on trailering.
- Make sure that the doors and hatches are properly closed.
- Pay attention to any equipment and accessories in the boat during trailering.
    - Make sure you secure all loose items in the boat.
    - Do not use a hood, canopy, tonneau cover or other similar top or cover on the boat during trailering.

      These hoods and covers can become detached at high speeds and damage the boat and cause a danger to traffic.

      A hood or other cover flapping in the wind during trailering can damage the boat surface.
    - Keep the hood in its dedicated storage compartment during trailering, or remove the hood completely, if necessary.

Boat storing

- Make sure that the bow is slightly elevated when in storage, to help potential water escape the deck.
- Make sure the boat is steadily positioned and secured. The weight of the boat needs to rest on the keel.
- Protect the areas of the hull and deck being supported with some form of padding.
- Keep the engines in a downward position.

© 2026 Axopar Boats / Brabus Marine

6 Operation

The boat owner must take local and international regulations into consideration concerning the boat crew, equipment and handling of the boat. In some countries, a driving license or a separate authorization is required for driving the boat. Special regulations may also apply.

Ensure that the anticipated wind and wave conditions do not exceed the design category of the boat, and that the crew is able to handle the boat in these conditions. Even though the boat is designed for such conditions, they can still be very dangerous. Only a capable, fit and trained crew, using a well maintained boat, can satisfactorily operate in such conditions.

If the boat is fitted with a life raft, carefully read its operation manual. Onboard, the boat must have the appropriate safety equipment according to the boat type and weather conditions. This equipment is compulsory in some countries. The crew must be familiar with the use of all safety equipment and the most important actions in different emergency situations. Sailing schools and clubs regularly organize rescue drills.

The equipment in the boat may differ from the equipment used in the figures in this manual. This might be due to any optional equipment chosen or modifications made after producing this manual. In such cases, contact your local dealer for the operation instructions and additional information regarding the operation of the equipment in question.

Always maintain the boat properly and make allowance for the deterioration that occurs over time and as a result of heavy use or misuse of the boat. Any boat, no matter how strong it may be, can be severely damaged if not used properly. Inappropriate use of this boat not compatible with safe boating is not allowed. It is always important to adjust the handling of the boat to the sea conditions and own boating experience. The gelcoat parts, especially the colored parts, need to be polished and waxed approximately every fourth months to prevent the parts from fading or getting other visual defects.

6.1 Handling devices

6.1.1 Steering console

The controllers are situated so that the driver can easily manage them from the steering console.

The location and quantity of the devices depend on what optional equipment and engine models have been chosen. See the device manuals for further information on the devices.

© 2026 Axopar Boats / Brabus Marine



(1) Chart plotters
(2) Bow thruster, trim tabs and audio control
(3) Engine remote control
(4) Steering console switch panel
(5) System information display
(6) Ignition keys
(7) Emergency stop
(8) VHF

6.1.2 Steering console switch panel

Here you can see details on the steering console switch panel.

© 2026 Axopar Boats / Brabus Marine

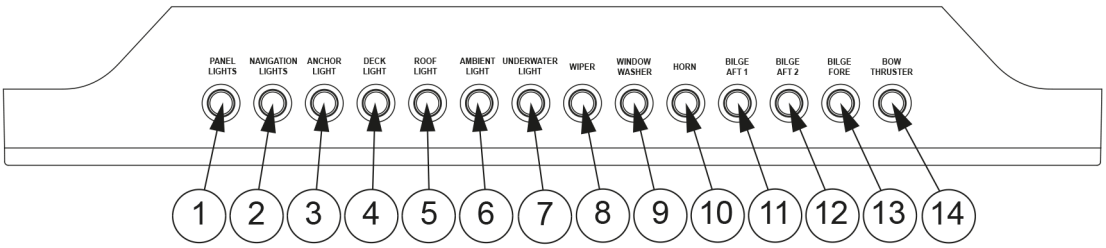

(1) Panel lights
(2) Navigation lights
(3) Anchor lights
(4) Deck lights
(5) Roof lights
(6) Ambient light
(7) Underwater light
(8) Wiper
(9) Window washer
(10) Horn
(11) Bilge aft 1
(12) Bilge aft 2
(13) Bilge fore
(14) Bow thruster

6.1.3 Windscreen wipers

The boat’s windscreen wipers are controlled by the switches in the boat’s steering console.

A switch for the windscreen washer is installed next to the switch for the windscreen wipers.

The windscreen wash-fluid tank is located under the driver’s seat.

6.1.4 Steering system

The steering system is one of the most vital systems related to safe boating.

The boats are equipped with a hydraulic steering system with the alternatives of power steering and non-power steering systems. Please refer to the collateral manuals provided by the outboard engine and steering system manufacturer included in the manual package provided with the boat.

The non-power steering system consists of a steering wheel, a helm pump, a hydraulic hosing, and a hydraulic steering cylinder.

The power steering system includes a steering pump to help with the handling of the vessel.

6.1.4.1 Checking and topping up oil

Effective and properly working steering is crucial for the safety of the boat.

© 2026 Axopar Boats / Brabus Marine

- Check the oil level in the pump before casting off.
- For detailed instructions and the steering system oil recommendation, see the manufacturer's documentation.

6.1.4.2 Steering maintenance

For the regular maintenance of the steering system components, please refer to supplier’s manual.

If you encounter issues beyond regular maintenance needs, please contact your boat dealer immediately for service.

6.1.5 Throttle lever

The engine throttle and shift are controlled by the electronic throttle lever. To start the engine, the lever must be in the neutral position. The throttle lever is used to control the engine’s RPM which affects the speed of the boat.

Moving the lever forward shifts engine into the forward gear, and moving the lever backwards shifts the engine into the reverse gear. Progressively moving the lever in one direction will increase the speed of the boat in that same direction.

For detailed guidelines about safe boating and component maintenance, please refer to the provided outboard engine literature. If you encounter issues beyond regular maintenance needs, or if noticeable failures occur, please contact your boat dealer immediately for service.

⚠ WARNING Always make sure no one is close to the propeller when starting the engine or engaging the propeller! Acknowledge the information provided on the helm’s warning labels.

6.1.5.1 Trim and tilt

The engine can be raised or lowered with the trim controls in the throttle lever.

Raising and lowering the engine is needed when trailering or launching the boat. Adjusting the trim angle of the engine also allows optimizing the run angle for the boat to achieve optimal performance or fuel efficiency.

When raising the engine(s) all the way, make sure the engines are facing straight aft, and no optional equipment such as foldable seats or aft deck gates are in the way.

Refer to the supplier’s manuals for detailed operation instructions, maintenance, and warranty information.

⚠ WARNING Raising the engines out of the water without paying attention to surrounding equipment such as aft deck gates, foldable seats or waterski frame may cause damage to the engines.

6.1.6 Starting the engine

See the engine manufacturer’s manual for engine information.

© 2026 Axopar Boats / Brabus Marine

1. Set the engine lever in neutral.
2. Turn the ignition on and check the fuel level.
3. Start the engine by turning the ignition key.
4. Check that the gauges for oil pressure and voltmeter show normal values.
5. Run the engine to operating temperature at idling speed. Never rev up a cold engine.

⚠ DANGER

Risk of carbon monoxide poisoning.

Be aware of the risks with engine exhausts. For example, under turbulence or disadvantageous wind conditions, exhaust can enter the boat. If this happens, avoid idling the engines. If these problems occur under way, do not open the hatches and ventilators, as it can worsen the problems. Instead, you may try solving the problems by changing the boat's speed or weight distribution.

⚠ WARNING

Never step onto the swim ladder when the engine is running. Stop the engine while the steering and propeller are being inspected.

⚠ WARNING

Do not operate this boat with an engine that exceeds the maximum engine power recommended by the manufacturer.

6.1.7 Joystick piloting

Your boat may be equipped with a joystick piloting (JPO) system. This system allows you to intuitively control the vessel at slow speeds with the joystick located in the helm area.

Operating the boat with the joystick is well suited for close quarter operations and when docking. The JPO system is ready to be used when the engine remote control levers are both in neutral position and the indicator light around the joystick turns green.

The joystick gives three axis control: fore and aft, port and starboard, and rotational, or any combination thereof. Moving the the joystick to starboard causes the boat to move sideways to starboard. Rotating the joystick causes the boat to rotate around its center. The joystick is proportional, which means that the further the joystick is moved from the center, the more thrust is applied into that direction.

The JPO system also comes with autopilot modes such as Skyhook, auto heading, and route mode (waypoint sequencing).

Please read the manufacturers user manual thoroughly before using any features of the joystick piloting system.

⚠ CAUTION

Factors such as wind, water conditions, thruster battery voltage (if equipped), and boat loading may degrade the accuracy and response of the JPO system.

⚠ WARNING

Avoid serious injury or death.

Even when engaging autopilot features of the JPO system, the operator must always stay at the helm. The JPO systems autopiloting features does not respond to hazards, obstacles, or swimmers in the vicinity of the boat.

© 2026 Axopar Boats / Brabus Marine

⚠ DANGER Before activating autopilot features such as Skyhook, auto heading or route mode, check that no one is in the water and tell passengers not to enter the water. Stop the engines immediately whenever someone is in the water near the boat.

6.2 Swivel seat - Driver and passenger seats

The driver and passenger seats are operated with locking handles.

⚠ DANGER The locking handles must be in the locked position before the boat speed exceed 5 knots.

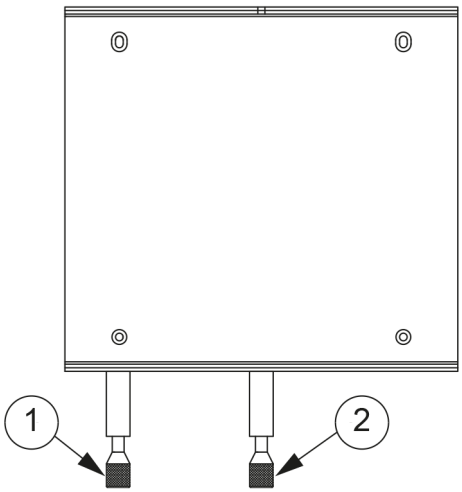

(1) Rotation locking handle
(2) Moving locking handle

- For the rotating function, press the locking handle down to release the lock.
  This allows you to rotate the seat on the post.
- For the moving function, lift the locking handle up to release the lock.
  This allows you to move seat from back to front.

6.3 Inspecting the boat

Due to safety reasons, the below listed inspections must be carried out before and after using the boat.

© 2026 Axopar Boats / Brabus Marine

6.3.1 Checklist: Regular inspection before leaving harbor

Safety

Make sure that:

- All the people onboard have life jackets.
- The wind and wave conditions do not exceed the design category of the boat.
- The emergency stop lanyard is attached to driver.
- There is a fire extinguisher (or several) onboard and their approval/inspection date has not expired.
- The needed ropes and anchor are onboard.

Draining and tightness

Check that:

- There is no water in the bilge.
- All the bilge pumps are functional.
- The bilge has no signs of fuel or oil leaks.
- All deck hatches are tightly closed.

Electrical and engine

Check that:

- All the fuses are intact.
- The main switches are switched on.
- The batteries have enough power.
- The engine works properly.
- The engine cooling water flows as expected.
- The fuel level is sufficient.

⚠ WARNING The specified tank capacity is not necessarily fully available, depending on the trim and load on board. The tank must always be kept at least 20% full.

6.3.2 Checklist: After using the boat

Make sure that:

- The main switches are switched off.
- The septic tank discharge valve is closed.
- There is no water in the bilge.
- The bilge pumps are functional.
- The deck draining works properly and all the draining valves are open.
- All deck hatches, roof canvas and doors are tightly closed.

© 2026 Axopar Boats / Brabus Marine

6.3.3 Notes for sunny conditions for Black OPS boats

The boat requires special attention when it is used in hot and sunny conditions.

In the construction of our boats, we use a high quality Premium Topcoat yacht paint for aesthetic high gloss finish and durability.

If you have selected this coating in a dark color, such as Gunmetal Grey or similar, it is of paramount importance that you are aware of certain maintenance considerations when using your boat in high temperature, high UV or environments exposed to extreme direct sunlight.

Failure to adhere to these guidelines may result in negative issues experienced on board as also voiding parts of the warranty of the boat.

Prolonged conditions of the boat being exposed to direct sunlight upon dark painted surfaces should be avoided as much as possible and care should be taken in environments where ambient temperatures regularly exceed 30 degrees Celsius (86 degrees Fahrenheit), areas near the equator, or where UV radiation is considered strong.

Potential negative impacts in such conditions may include:

- Comfort onboard due to raised ambient temperatures of dark painted surfaces
- Raise of surface temperature on dark painted surfaces to uncomfortable levels
- Decreased air conditioning capacity (if installed)
- Efficiency of refrigerators onboard may be limited, which may cause higher power consumption

⚠ CAUTION In the most extreme conditions, skin burns may result from direct contact with painted surfaces.

Protecting

When the boat is left stationary for a period more than 24 hours, the boat must be protected with the provided Planofil UV protective covers in high temperature conditions stated above.

We recommend that the boat is covered at all times when not in use.

Potential risks if these conditions are not adhered to may include (but are not limited to):

- Damage, cracks, blisters, scratches of fading of the coating and painted surfaces.
- Increased maintenance costs.
- Color change in seating and upholstery materials.
- Deformation or cracks in hatches, bonding areas of deck and hull, carbon fibre and console parts.
- In worst cases, GRP top surface layer delamination.

Any damage or injuries resulting from failures to undertake the outlined maintenance and precautions, or issues that could have been avoided, are not covered under warranty.

© 2026 Axopar Boats / Brabus Marine

6.4 Handling the boat

6.4.1 Checklist: Boat handling before leaving harbor

For safe navigation under all weather conditions, proper sound signaling equipment in compliance with regulations (COLREG, 1972) must be carried on board. Make sure that the sound signaling equipment on the boat is compliant with these regulations.

⚠ CAUTION According to national regulations in some countries, it is a legal requirement to wear a life vest at all times.

Before leaving the harbor, check the following:

- Check that the boat and its equipment are in seaworthy condition.
- Always listen to long-term weather forecasts when planning longer trips.
- Always make sure there is enough fuel and freshwater in the tanks.
- Check that all items on board are properly stowed and adequately secured to manage rough sea and wind conditions.
- Make sure that the swim ladder is raised out of the water before moving off.
- Make sure that the steering is correctly positioned before starting.
- All persons on board must wear an appropriate life vest when on deck.

6.4.2 Leaving the jetty

Before casting off, consider how to best leave the jetty.

- Check what the wind direction is.
- Using a bow thruster, move the bow out and then engage the propeller.
- If the boat has two engines, move away from the jetty by engaging the engine nearer the jetty astern at idling speed and engaging the other engine ahead at idling speed on.
- The boat will swing out from the jetty astern. As the bow will move against the jetty, fend off properly.

With only one engine this can be a little more challenging, especially if the wind is pressing the boat firmly against the jetty, you have to use a spring to get the stern out.

- Firmly fend off the bow from the jetty.
- Take a line from the bow around a bollard or cleat, so that it can be easily let go.
- Engage idling speed ahead and turn the rudder so that the stern glides out from the jetty.
- When the boat has reached a position, where it can safely be reversed, release and retrieve the line, quickly center the rudder and engage astern.

⚠ CAUTION Gather in all lines and fenders while you are still in sheltered water. A rope around the propeller can disable a boat.

© 2026 Axopar Boats / Brabus Marine

6.4.3 Driving the boat

Going out in a motor boat involves responsibility not just to those on board, but also to others we meet on the water. Showing consideration for others makes boating comfortable. Everyone has the same right to be at sea, whatever kind of boat they go afloat in.

The physical laws that apply to a boat are rather different from, for example, those affecting a car, as are the possibilities of controlling it.

You can influence a boat's behavior and the level of comfort on board primarily by adapting the speed to the prevailing sea conditions and by the intelligent use of the trim tabs. A planing boat rides almost level in the water at maximum speed. As the speed of the boat is reduced the trim angle increases and the bow rises slightly. This is normal, and is a prerequisite for good performance.

6.4.3.1 Emergency stop

If the boat is equipped with an emergency stop, attach its lanyard to yourself immediately after detaching the mooring lines. For more detailed instructions, see the engine manual.

It is very important that the boat stops if you for some reason fall overboard or stumble on board, particularly if you are alone. However, remember to detach the lanyard from your wrist before docking or beaching operations to prevent the engine from stopping unintentionally.

Unintended activation of the emergency stop during normal operation can occur and may lead to hazardous situations, including:

- Sudden loss of forward motion: passengers, especially those seated at the bow, may be thrown forward unexpectedly. In severe cases, individuals could be ejected overboard and risk injury from the gearcase or propeller.
- Loss of power and steering control: this can be critical in challenging conditions such as heavy seas, strong currents, or high winds.
- Reduced maneuverability during docking: unexpected engine shutdown may result in loss of control when approaching docks or other vessels.

The emergency stop is designed to stop the engine immediately if the lanyard is pulled with enough force to detach from the switch. This feature helps prevent accidents if the operator falls overboard or loses control.

To reset the emergency stop, thread the loop at the end of the lanyard around the emergency stop and push the emergency stop back up. The emergency stop can also be reset without the lanyard by pushing the emergency stop back to up position if the situation requires it.

If your boat is equipped with an emergency stop model that cannot be reset without the lanyard, you must keep a spare lanyard on board. Store the spare lanyard near the steering console for quick access. If your boat did not come with a spare lanyard, request one from your dealer.

Always inform passengers about how the emergency system works before departure.

6.4.3.2 Driving at high speed

Although the boats have passed the CE requirements for swerve tests at full speed, BRABUS Marine does not recommend making sharp turns at high speed. When exceeding a certain speed limit any hull construction might lose its grip. This might lead to passengers hurtling out of the boat, especially in a single engine configuration.

© 2026 Axopar Boats / Brabus Marine

- Do not use the boat if it has an engine with a higher power rating than indicated on the capacity plate.
- Do not drive the boat at high speed if the engine's rig angle is negative (bow down).
- Do not drive at full speed on congested waterways or if the visibility is limited because of weather conditions or waves.
- Reduce your speed and wake as a matter of courtesy, and also for the safety of yourself and others.
- Observe and obey speed limits and prohibitions associated with a swell.
- Follow the rules of navigation and the requirements of COLREG (Convention on the International Regulations for Preventing Collisions at Sea).
- Always make sure that you have the space needed for avoiding collisions and coming to a halt and for evasive maneuvers.
- Always use an emergency stop if available.
- Reduce speed in high seas for increased comfort and safety.
- Learn the boat's speed potential. Utilize this knowledge for economical and safe cruising.
- Avoid using high speed along with large rudder movements when going astern, because that places great strain on the rudder and steering mechanism.
- Avoid sudden steering maneuvers at high speeds.
- Avoid staying in the bow area when driving at high speeds.

Avoid sudden changes in travel direction at high speed. Let the boat come to a stop, and the engine rev down before shifting between forward and reverse. Otherwise excessive strain is put on the engine, which could cause the engine to stop. In the worst case, sea water may enter the engine.

A right-handed propeller rotates clockwise and a left-handed propeller anti-clockwise, seen from the stern. The rotation of the propeller is critical for steering the boat. The right-handed propeller pushes the stern of the boat to starboard when the engine is engaged ahead and to port when it is going astern. The direction of rotation of the propeller has a major impact on the turning radius. A right-handed propeller gives a smaller turning radius to port than to starboard. This is called the propeller's paddlewheel effect.

The boat's propellers have considerable propulsion power that provides powerful acceleration. Take this into consideration to avoid dangerous situations arising from this.

⚠ DANGER

A revolving propeller is life-threatening to a swimmer or a person who has fallen overboard.

Use the emergency stop and turn off the engine when someone is climbing on board.

6.4.3.3 Driving in rough seas

Never go out in rough seas, if you are uncertain whether the boat and those on board can cope. Follow these simple rules.

- Be well prepared.
- Remember to secure loose equipment.
- Always have a sea anchor and other emergency equipment easily accessible.
- Avoid breaking seas that can appear close to land and over shallows.

© 2026 Axopar Boats / Brabus Marine

- If there are significant waves, always reduce speed to guarantee the safety of the persons on board.
- Use the trim tab to trim the bow down to reduce hull slamming in a head sea.

In a head sea

- Adjust speed to suit the size of the waves.
- Adjust the trim angle to the size of the waves. Avoid taking seas beam on.

In a following sea

Remember to keep the bow high in a following sea. Avoid crashing through waves, maintain low speed. If necessary, deploy the sea anchor to reduce speed.

Planing boats can be particularly exposed in rough following seas. The stern of the boat rises and the rudder does not answer, so the boat broaches while the bow cuts down into the sea.

6.4.3.4 Maneuvering in narrow channels

When maneuvering the boat in narrow channels, the engine speed must be kept as low as possible so that maneuvers are calm and steady.

In difficult wind and current conditions, more revs might be necessary to make full use of the power of the engine. In these conditions, it is important that maneuvers are made quickly and precisely to prevent the boat from drifting into trouble for example.

A good rule before starting a maneuver under difficult conditions, is to think through the different situations which could arise. Pay attention to the wind and current conditions and decide in advance which maneuver you will make. It is also important to brief crew members on what they need to do in different situations.

Always keep in mind that the stability of the boat may be reduced when towing.

⚠ CAUTION Even a nonslip molding can be slippery to walk on when the deck is wet.

6.4.4 Visibility from steering position

The International Regulations for Preventing Collisions at Sea (COLREG) demand that a proper lookout is kept at all times, and the *right of way* rule is followed.

The following factors can considerably reduce visibility, among other things:

- Gear trim angle
- Trim tab angle
- Load and load position
- Speed
- Rapid acceleration
- Changeover from displacement speed to planing
- Sea conditions
- Rain and thunderstorms

© 2026 Axopar Boats / Brabus Marine

- Darkness and fog
- Inner lighting when under way in the dark
- Position of curtains
- People and equipment that block the driver's view.

If boat is driven under clear planing speeds, visibility of operator may be blocked by bow. Use of trim tabs and engine trim may be used to lower the bow.

⚠ WARNING Visibility from the seated position is limited. Maintain lookout and control the trim of the boat if needed.

⚠ WARNING Make only small adjustments to trim tab positions at a time. Holding down the button for the trim tab for any length of time can result in partial loss of control of the boat.

⚠ WARNING Visibility from the seated position at the helm station is limited. Avoid serious injury or death from collisions. Operation from a standing position may be necessary to maintain lookout as required by rules of the road.

6.4.5 Using the trim tabs

A boat does not need trim tabs to get up on the plane or to give good performance. However, trim tabs are a very useful aid when used correctly.

There are two situations in particular where the trim tabs need to be used:

- When it is desirable to trim the bow down in a rising sea and at speeds between going up planing and cruising speed.
- When running with a strong beam wind.

A planing boat always leans into a strong side wind. This reduces the boat’s seakeeping qualities, which is why listing to one side needs to be eliminated as far as possible. Lowering the trim tab on the windward side brings the boat back into normal attitude.

For trimming the bow down, both trim tabs are used in parallel. Begin by retracting both trim tabs completely, then lower both of them a little at a time, so that you retain complete control over how the boat is affected. When running with a following sea, both trim tabs always need to be fully raised. The reason for this is that boats have a tendency to “dive” in a strong following sea, which can result in uncontrollable slowing. Therefore you must run the boat with a high bow angle in a following sea.

6.5 Preventing falling overboard

The boat’s working decks are areas where people can move about when the boat is being maneuvered.

© 2026 Axopar Boats / Brabus Marine

The working deck area is shown in grey in the figure.

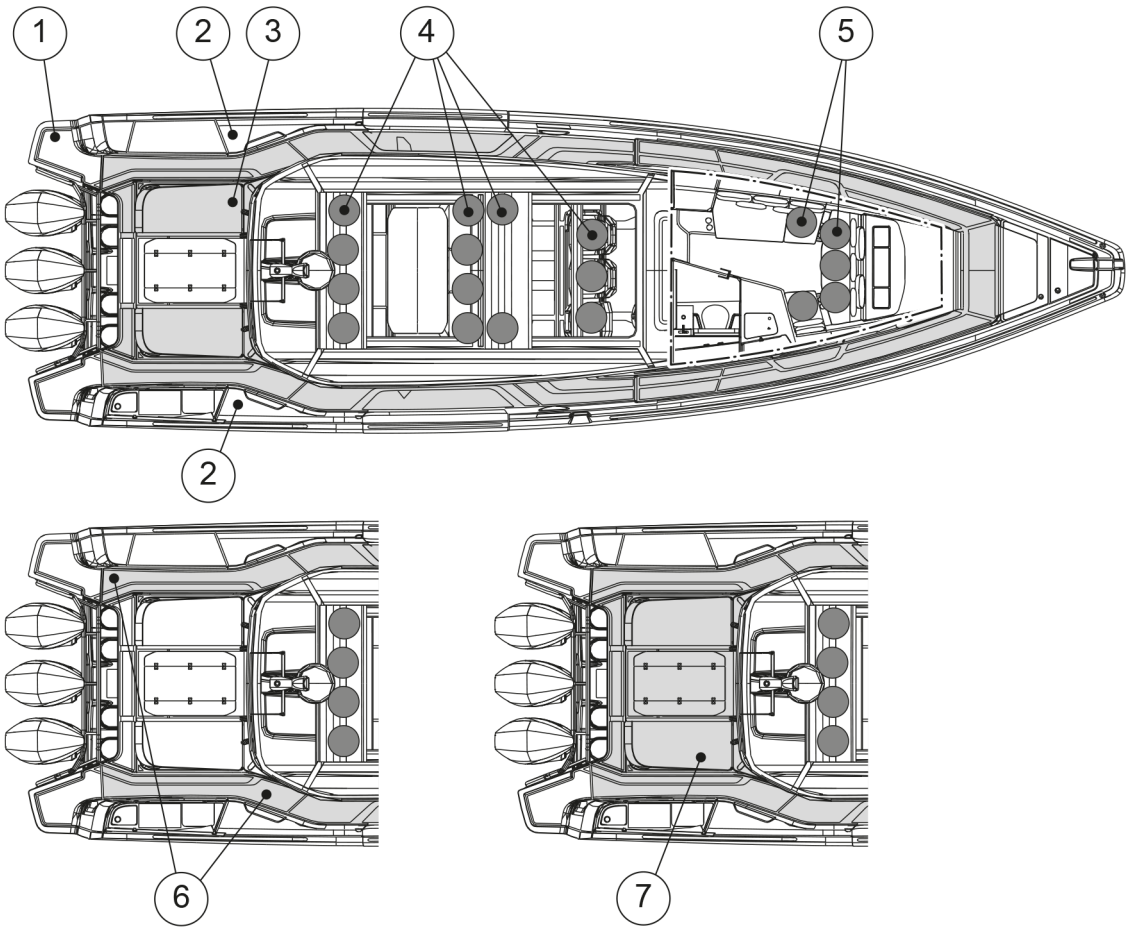

(1) Swim ladder
(2) Hooking points
(3) Working deck area (Open aft deck and aft deck bench options)
(4) Seats
(5) Seats in the front cabin
(6) Working deck (Aft deck cabin option)
(7) Working deck (U-sofa and table option)

The boat is equipped with rails and a high bulwark except for the open aft area. If you need to operate at the aft deck in bad weather, attach your lifevests harness to the hooking points in the aft corners.

Moving about in the aft part of the aft deck and on the front deck while the boat is under way is not recommended.

If the boat is equipped with aft deck gates, keep them closed while under way.

If a person has fallen into the water, the easiest way to get back on board is to use the swim ladder. The ladder can be pulled down also from the water.

© 2026 Axopar Boats / Brabus Marine

Staying on deck

⚠ WARNING Staying in the bow of the boat is not recommended in speeds exceeding 30 knots.

⚠ DANGER A revolving propeller is life-threatening to a swimmer or a person who has fallen overboard.

- Use the emergency stop.
- Turn off the engine when someone is climbing on board.

If the sun deck cushions or the front deck table are in place, observe the maximum speed of 15 knots to avoid the cushions or table detaching at speed or in high waves.

6.6 Anchoring, docking and mooring

6.6.1 Fastening points

Fastening points (or cleats) are located both at the stern, midship and bow.

- When anchoring or towing, the forward force is 51.8 kN.
- When mooring the forward force is 42.3 kN.
- When mooring the rearward force is 36.1 kN.

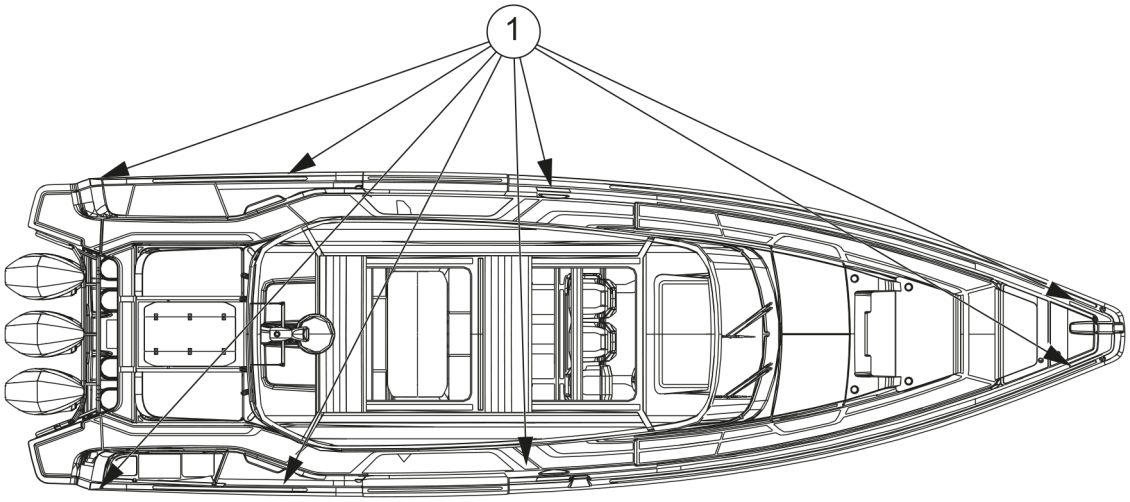

(1) Fastening points

⚠ CAUTION The breaking strength of lines shall in general not exceed 80% of the breaking strength of the fastening points.

© 2026 Axopar Boats / Brabus Marine

6.6.2 Docking

Always brief your crew how you are planning to dock. Fenders and at least one mooring line fore and aft must be in place before approaching the jetty.

It is always easiest to dock against the wind. Try to hold the bow exactly into the wind and maintain sufficient speed for the boat to answer the rudder. If the bow is blown off in one direction, back out and repeat the maneuver. Bring the bow up to the jetty, and make sure you get a line ashore quickly.

Docking with a side wind is a little more difficult. Do not steer parallel to the jetty letting the boat blow in as there is always a risk of the bow being blown off towards other boats or the jetty. Instead, try to maneuver the boat so that the wind comes directly from astern. Then the boat can be maneuvered straight ahead since the wind helps hold the boat on a straight course. It is good to have someone on the foredeck that can go ashore and quickly turn the bow in the desired direction after the boat has stopped completely.

Try to always avoid sharp movements of the throttle, since idling speed in ahead and astern is generally adequate. Sharp movements of the throttle can lead to panic maneuvers.

⚠ CAUTION The tensile strength of the lines or chains should normally not exceed the strength of the fastening point in question.

6.6.3 Checklist: Before anchoring

1. Check the chart to see if anchoring is permitted in the area.
2. Listen to the weather forecast for the area and take note of the expected wind conditions.
3. Switch on the echo sounder.
4. Study the seabed conditions and make sure that there is good holding ground.
5. Check that the safety chain has been released from the anchor.
6. Wait until you have reached the intended anchoring point before lowering the anchor.
7. Let out the anchor line equal to at least three times the depth of the water.
8. Put the engine in astern to check that the anchor has taken hold (only when bow anchoring).
9. Note your position on the GPS. Regularly check that the boat has not moved from its position.
10. Set the echo sounder to “Anchor Watch”.

⚠ WARNING Always fix the anchor in such a way that it is securely fastened onto the boat. An anchor that falls off when under way may cause serious damage to the boat and mortal danger to the crew.

© 2026 Axopar Boats / Brabus Marine

6.6.4 Towing and mooring

⚠ CAUTION

When towing another boat or being towed, always drive slowly. If the boat you are towing is of the displacement hull type, never exceed its hull speed.

- Always attach the tow line so that it can be detached under load. It is the owner’s and users' responsibility to ensure that the mooring lines, towing lines, anchor chains, anchor lines and anchors are adequate for the vessel’s intended use.
- Always remember that the stability of the boat may decrease when being towed.

© 2026 Axopar Boats / Brabus Marine

7 Maintenance

7.1 Cleaning and maintaining the gelcoat surface

The gelcoat surface of the boat is subjected to environmental conditions which can, under certain circumstances, lead to deterioration of the surface. Overtime, these external factors such as saltwater, high UV exposure and temperature variation, can have an effect on the gelcoat surface.

Generally, gelcoat should last 3 years without showing any significant signs of yellowing, chalking, or other deterioration in typical conditions.

NOTICE

Clean and maintain regularly all the gelcoat surfaces on the boat.

If the regular cleaning and maintenance is neglected, or if the boat is exposed to certain environmental conditions where it is berthed, deterioration of the surface finish such as fading, discoloration and brittles may become visible over time.

- Wash and clean the boat after every trip, and weekly if it is stored outside uncovered.
- Wax the boat twice a year if used all year, otherwise annually.
- Inspect the gelcoat surface annually for signs of deterioration, such as brittle surfaces or changed color tones.
- Small scratches or discolorations can be fixed by buffing or polishing.
- Severe scratches, discoloration or oxidation may require wet sanding before buffing, polishing and vaxing.

  Wet sanding is recommended to be performed by your BRABUS Marine dealer or a trained professional.
- When the boat is not in use, keep the gelcoat surface out of the sun or cover the boat with a canvas tarpaulin.

  Do not use plastic or other non-porous materials, which can trap moisture between the cover and the surface.

Washing

NOTICE

Use a cleaning product specially made for boats. Do not use household cleaning products, chlorine, acids or similar as they may damage the boat surface due to their improper pH value.

Wash the boat after every trip by using a mild cleaning product. Dilute the cleaning product with fresh water according to the instructions on the product label.

1. Rinse the deck and hull with fresh water to remove loose dirt.
2. Wash the surfaces with the diluted cleaning product and a soft-bristled brush.
3. Rinse off with fresh water.

© 2026 Axopar Boats / Brabus Marine

Waxing

Waxing the gelcoat surface restores gloss and protects the finish. Only use wax recommended for gelcoat, and follow the product instructions carefully.

Wax can either be applied by hand using a clean rag, or with an orbital-motion buffing machine.

NOTICE If using a buffing machine, do not exceed the speed of 1200 rpm. Using a higher speed may burn the gelcoat.

NOTICE Do not wax a gelcoat surface in direct sunlight.

1. Apply wax and wait for a few minutes until the wax looks dry.
2. Buff the wax either by hand using a clean rag, or by using a buffing machine.

   Buff in circular motions until the surface is clean and glossy.
3. Finish by wiping the potential wax residues off with a clean rag.

Polishing and buffing

Small scratches or discolorations can be fixed by polishing and buffing the boat. If the surface has severe discoloration or oxidation, wet sanding is recommended before polishing and buffing.

- Polishing compounds remove small scratches and discolorations.
- Buffing compounds contain abrasive and remove deeper scratches or oxidation.

  Buffing compounds can be used, for example, to remove scratches on the hull caused by the fenders.
- After using the buffing compound, use polishing compound to achieve the best possible finish.
- Follow the product instructions of the compound carefully.

Polishing and buffing compounds can either be applied by hand using a clean rag, or with an orbital-motion buffing machine with a polishing pad.

NOTICE When using a buffing machine, do not exceed the speed of 1200 rpm. Using a higher speed may burn the gelcoat.

NOTICE Do not polish or buff a gelcoat surface in direct sunlight.

1. Apply polishing or buffing compound on the surface and wait for a few minutes until the compound looks dry.
2. Polish or buff the compound either by hand using a clean rag, or by using a buffing machine with a polishing pad.

   Buff in circular motions until the surface is glossy.
3. Wax the surface.

© 2026 Axopar Boats / Brabus Marine

Wet sanding

NOTICE Wet sanding is recommended to be performed by your BRABUS Marine dealer or a trained professional.

Severe scratches, discoloration or oxidation of the gelcoat surface may require wet sanding. Wet sanding can be done either by hand or by using a machine.

NOTICE When using a machine, do not exceed the speed of 1200 rpm.

Using a higher speed may burn the gelcoat.

NOTICE Do not wet sand a gelcoat surface in direct sunlight.

1. Spray water to the area that needs to be sanded.

   NOTICE Keep the surface continuously moist while sanding.

2. Sand the surface with a 1000 grit sandpaper (for example Mirka Abralon).

   If you use a machine, use a low rpm speed to get the best result.

   Keep sanding until the entire surface is equally matt.
3. Sand the surface with a finer 1400 grit sandpaper.
4. Sand the surface once more with an even finer-grit sandpaper.

   This saves time in the buffing and polishing stage.
5. After sanding, when the surface looks equally matt, rinse the surface with fresh water and allow to dry.
6. Buff and polish the surface to get the gloss back.
7. Wax the surface.

7.2 Antifouling

Painting your boat's hull with antifouling paint is worth considering if your boat is most of the season in water.

Boats that are frequently lifted out of the water and relaunched during the boating season can be affected by antifouling oxidization. Out-of-the water, antifouling paint will oxidize, which will prevent the biocide release and slowly cause antifouling to lose its effectiveness. Follow the paint manufacturer's specifications for launching window.

Antifouling wears gradually over time, depending on factors such as the location where the boat is used and how often the boat is used. As a rule of thumb, antifouling lasts one season once applied. When the antifouling needs to be repainted, it is important to use the same antifouling paint as the existing antifoul, or to scrub off old antifouling paint down to gel coat. If different antifouling paints are used, there is a risk that the composition of the paints are incompatible, preventing the antifouling paint from working.

© 2026 Axopar Boats / Brabus Marine

Contact your nearest BRABUS Marine dealer in antifouling repainting and condition inspection related matters.

7.3 Maintaining the interiors

7.3.1 Wooden interiors

The interior details of the boat, such as the locker doors and drawer fronts and wooden strips, are made of oiled wood.

- Clean the wooden interior details with a damp cloth and a small amount of soapy water.
- Treat the wooden surfaces again every year to protect the wood.

7.3.2 Plastic and painted surfaces

1. Wet the surface evenly with water before the actual cleaning.
2. Remove stains.
    - Remove regular stains with a brush and a lightly diluted cleaner.
    - Remove grease with a brush or a sponge and window cleaner.
3. Clean the surface afterwards with sponge and water.
4. Wipe dry with a piece of cloth.

7.3.3 Fabrics

The interior fabrics are washed according to separate washing instructions (marking on the fabric).

In case the marking is not visible:

1. Wash in 40°C with a light spin cycle.
2. Hang to drip dry.

The material may slightly shrink. If you want to avoid shrinking, take the fabrics to a dry cleaner.

7.3.4 Doors and hatches

- Clean the tracks of sliding doors and hatches regularly and lubricate, if necessary.
- Lubricate handles and locks with regular lock lubricant.

7.4 Maintaining the cover



New covers may leak initially, as the seams need to swell.

© 2026 Axopar Boats / Brabus Marine

During use

To prevent quick deterioration of the cover, secure it tightly in a folded-up position to prevent flapping.

After use

NOTICE

- Hang to dry. Never use a drying cabinet or iron to speed up drying.
- Check that the cover is completely dry before stowing. Stowing a moist cover can cause mold damage.
- Store the cover in dry indoor conditions for the winter.
- The cover must not be stored in the boat.

7.4.1 Cleaning the cover

The cover needs to be thoroughly cleaned two or three times a year.

NOTICE Never use high pressure washers or chemical cleaning agents.

1. Let the fabric cover soak for at least 24 hours.
2. After soaking, wash the inside and outside of the cover with a sponge or a soft brush.

   Use mild soapy water and plenty of water, max. 30°C.
3. Rinse thoroughly with freshwater.

   Mix 12% vinegar in the final rinsing water to neutralize the soap residues.
4. Hang the cover to drip dry.

7.5 Protecting underwater metal parts

Boat's underwater metal components, such as thru-hulls, seacocks, trim tabs, engine internal components and propellers, are subject to electrolytic corrosion. Electrolysis and galvanic corrosion (corrosion of dissimilar metals in salt water) can occur in marine environment due to external factors such as stray currents, polluted waters, or proximity of other vessels. It is important for boat owner to be aware of the phenomena, as they can cause serious deterioration over time.

Signs of electrolytic corrosion are, for example, white, powdery substance on exposed metal such as propellers or breakers, or thru-hulls and seacocks turning greenish. If the corrosion has progressed far, even deep pitting can appear on the part’s surface.

The boats are equipped with sacrificial anodes to protect the metal parts from galvanic corrosion. Additionally, boats equipped with shore power have galvanic isolators to stop low voltage currents from flowing through the boat.

All underwater metal parts need to be inspected annually for signs of corrosion. Additionally, underwater thru-hulls and seacocks are recommended to be replaced every 5 years. Please see the section ***Preventing corrosion*** for more details.

© 2026 Axopar Boats / Brabus Marine

7.6 Preventing corrosion

Sacrificial anodes are installed on the boat's trim tabs and engines to protect metallic parts from corrosion damage. The anodes need to be replaced regularly as they wear out to protect other metallic parts.

- Inspect the anodes monthly.
- Replace them when approximately fifty percent of the anode has deteriorated.

In general, anodes need replacement once a year in fresh water, and more frequently in saltwater environment. If there is an increase in the consumption speed, it can be a sign of electrical issue and the root cause should be investigated.

7.7 Preventing frost damage

- The bilge pump system is fitted with a water lock on the hose.
  - Detach the hose and fully drain the water from the water lock and run the pumps dry. Otherwise the pumps may freeze and break.
- Unscrew the frost plug on the underside of the shower fittings.
  - If there is no frost plug, unscrew the shower hose.
- Drain the water tank and all other components containing water in order to avoid frost damage.
- Run the freshwater pump dry to drain out all the water.
- Make sure that no water remains in the boat under any circumstances. Leave the hatches in the cabin partially open.

7.8 Checklist: Before winter lay-up

- Wash the hull and bottom immediately after lifting the vessel out of the water.
- Wash all parts inside, also under the floorboards.
- Leave all lockers, drawers, and cabin and wardrobe doors open.
- Remove the carpets.
  - Store the carpets and cushions indoors in a dry place.
  - If this is not possible, make sure that the cushions are dry and position them on their side.
- Disconnect and service the air conditioner.
  - Switch off the power and disconnect the power supply.
  - Close the seacocks.
  - Drain the cooling water circuits and pumps, or fill them with antifreeze.
  - Check the more detailed instruction in the manufacturer's manual.
- Disconnect and service the fridge.
  - Switch off the power and disconnect the power supply.
  - Defrost the fridge.
  - Clean and dry the exterior and the interior of the fridge.

© 2026 Axopar Boats / Brabus Marine

- Empty and dry the condensate water tray.
- Leave the door slightly ajar to enable ventilation.
- Check the more detailed instruction in the manufacturer's manual.

- Ensure good ventilation in the boat.
- Make sure that there is no water beneath the fuel tank. Any water present can be extracted using the suction pipe that is attached to the tank's exterior.
- Make sure that the rubber O-ring between the fuel tank inlet and the fuel tank cap is intact. Otherwise there is risk of water getting inside the fuel tank.

NOTICE If the batteries are left aboard, make sure they are fully charged, otherwise the batteries can freeze and crack.

7.9 Checklist: Before launching

1. Remove the tarpaulin in good time before launching.
2. Wash the hull with a regular shampoo and a soft brush.
3. Wax the hull, if necessary.

   Use a standard boat wax.
4. If there are small scratches on the hull or if some of the surface gelcoat has lost its shine, use a rubbing compound on these areas before polishing.
5. Paint the bottom with antifouling paint.
6. If the batteries have been removed, put them back and check the electrolyte level in the cells.

   Check the condition of the batteries.
7. Check all cables, clamps, engine mountings and other fastenings.
8. Check the steering before launching.
9. Check the instrumentation.
10. Close all water drain plugs.
11. Check that the seacocks are tight and in order, check for any frost damage.
12. Check all pipes, hoses and cocks.
13. Make a note of any frost damage.

7.10 Corrective maintenance

7.10.1 Deposits

Mild detergents and fine rubbing compounds reduce the weathering and calcium deposits accumulated on the surfaces.

© 2026 Axopar Boats / Brabus Marine

NOTICE Do not apply the rubbing compound in direct sunlight.

- Use only a fine grit compound, and follow the label instructions carefully.
- For the best result, wax the surface after treating it with the rubbing compound.

7.10.2 Scratches and nicks

Most scratches and nicks can be removed by using a rubbing compound followed by waxing.

7.10.3 Stains

Most stains can be removed by washing with a mild detergent.

- For stubborn stains, use a tine abrasive household cleanser followed by waxing to restore original luster.
- For non-water-soluble stains, such as grease, oil, and rubber heel marks, use a solvent such as acetone, rubbing alcohol, toluene or xylene, followed by a mild detergent.
    - If these solvents are not effective, try a rubbing compound or fine sanding followed by waxing.

7.10.4 Deep marks, gouges and holes

Deep marks, gouges and holes should be repaired professionally.

Gelcoats can be well repaired by professionals, and in most cases the repair will be undetectable.

NOTICE In cases where the damage has pierced the gelcoat layer, further exposure to water or chemicals should be avoided.

Failure to observe this precaution may result in extensive and potentially costly damage to the underlying laminate structure.

© 2026 Axopar Boats / Brabus Marine

8 Environment

When handling environmentally hazardous substances such as fuel, oils, solvents, grease, bottom coats, you need to consider the following:

- Always read the instructions for each product carefully and handle the product with care.
  - Make sure that the used packaging, cans and similar items are discarded in designated collection points.
  - If you are in any doubt whether the product is hazardous or not, contact the supplier or vendor of the product.
- The backwash from boats wears down the shoreline and creates problems for other boats near you.
  - Always adjust your speed to the situation and the surroundings to avoid unnecessary backwash.
- Always drive the boat at the most economical engine revs possible, taking the prevailing conditions into account, to avoid unnecessary emissions and noise.
- Make sure that the engine is properly serviced at regular intervals so that noise and emission levels are minimized.
  - Read the engine manufacturer's manual carefully.
- As a boat owner you must be aware of the local environmental laws, and respect codes of good practice.
  - Never empty the septic or blackwater tank into water.
  - Familiarize yourself with the international regulations on the prevention of marine pollution (MARPOL) and comply with these regulations.
- Always investigate the source of any oil leaks as soon as possible.
- Dispose of recovered spilt oil correctly.
- Keep oil-absorbing cloths or rolls on board.
- Never dispose of overboard any oil, paint or other chemical that is potentially harmful to the environment. Sanctions are in place in most parts of the world for those who disregard this rule!

⚠ WARNING Any oil must be treated as chemical waste.

8.1 Requirements for North America

The EPA standards state that in freshwater lakes, freshwater reservoirs or other freshwater impoundments whose inlets or outlets are such as to prevent the ingress or egress by vessel traffic subject to this regulation, or in rivers not capable of navigation by interstate vessel traffic subject to this regulation, marine sanitation devices certified by the U.S. Coast Guard installed on all vessels shall be designed and operated to prevent the overboard discharge of sewage, treated or untreated, or of any waste derived from sewage.

The EPA standards further state that this shall not be construed to prohibit the carriage of Coast Guard-certified flow-through treatment devices which have been secured so as to prevent such discharges. They also state that waters where a Coast Guard-certified marine sanitation device permitting discharge is allowed include coastal waters and estuaries, the Great Lakes and interconnected waterways,

© 2026 Axopar Boats / Brabus Marine

freshwater lakes and impoundments accessible through locks, and other flowing waters that are navigable interstate by vessels subject to this regulation (40 CFR 140.3).

© 2026 Axopar Boats / Brabus Marine

9 Appendix I: Checklists

9.1 Checklist: Fire in the engine

- Stop the engine.
- Steer the boat up against the wind, if possible.
- Make sure all passengers have life jackets.
- If necessary:
  - Evacuate the passengers.
  - Call for sea rescue.
- Shut off fuel and main power switches.
- Extinguish the fire.
- Wait until fully certain that the fire has been extinguished before opening the engine cover.

  Carefully open the engine cover and be prepared to use the handheld fire extinguisher if necessary for post-fire extinguishing.
- Put out possible smoldering fires with water.

9.2 Checklist: After fire

- Open doors and windows for better ventilation.
- Inspect the boat and its equipment, and repair any damages.
- Contact local authorities, if needed.
- Make sure that the fire extinguishing equipment is refilled or replaced after use.

9.3 Checklist: After grounding

If the boat hits a rock, the damage may be easily visible or hidden.

- Make sure that everyone on board is wearing a life jacket.
- Check that everyone on board is up on the deck.
- If necessary, make an emergency call or use a distress signaling device.
- Immediately after a capsize, check the bilge for leaks. Even if the bilge pump is not rated for leaks, you may try to empty the boat using it.
- Stop the engines and lift them out of the water.
- Turn off all the main electrical switches.
- If you can detach the boat after a rock slide, check the condition of the engine.
- Inspect the boat for leaks.
- To avoid further damage to the engine, do not drive the boat if, for example, you notice an oil leak or the engine blade is damaged.

© 2026 Axopar Boats / Brabus Marine

- If the leak is small, the boat is detached and at least one of the engines is functioning, drive to the nearest shore to prevent the boat from sinking.
- If a life raft is available and required, prepare it for use.
- If you detect a leak, close all doors and hatches. Open doors and hatches may cause the boat to drown more quickly.
- Do not go inside of the boat if it has a leak.
- Call for towing assistance from local authorities or other agencies.
- A professional should inspect the boat after grounding. Even if there is no visible leak, the hull may be damaged and in need of repair.

⚠ WARNING A big leak may cause the boat to sink quickly. Do not go or stay in and wear a life jacket.

9.4 Checklist: Regular inspection before leaving harbor

Safety

Make sure that:

- All the people onboard have life jackets.
- The wind and wave conditions do not exceed the design category of the boat.
- The emergency stop lanyard is attached to driver.
- There is a fire extinguisher (or several) onboard and their approval/inspection date has not expired.
- The needed ropes and anchor are onboard.

Draining and tightness

Check that:

- There is no water in the bilge.
- All the bilge pumps are functional.
- The bilge has no signs of fuel or oil leaks.
- All deck hatches are tightly closed.

Electrical and engine

Check that:

- All the fuses are intact.
- The main switches are switched on.
- The batteries have enough power.
- The engine works properly.
- The engine cooling water flows as expected.
- The fuel level is sufficient.

© 2026 Axopar Boats / Brabus Marine

⚠ WARNING The specified tank capacity is not necessarily fully available, depending on the trim and load on board. The tank must always be kept at least 20% full.

9.5 Checklist: After using the boat

Make sure that:

- The main switches are switched off.
- The septic tank discharge valve is closed.
- There is no water in the bilge.
- The bilge pumps are functional.
- The deck draining works properly and all the draining valves are open.
- All deck hatches, roof canvas and doors are tightly closed.

9.6 Checklist: Boat handling before leaving harbor

For safe navigation under all weather conditions, proper sound signaling equipment in compliance with regulations (COLREG, 1972) must be carried on board. Make sure that the sound signaling equipment on the boat is compliant with these regulations.

⚠ CAUTION According to national regulations in some countries, it is a legal requirement to wear a life vest at all times.

Before leaving the harbor, check the following:

- Check that the boat and its equipment are in seaworthy condition.
- Always listen to long-term weather forecasts when planning longer trips.
- Always make sure there is enough fuel and freshwater in the tanks.
- Check that all items on board are properly stowed and adequately secured to manage rough sea and wind conditions.
- Make sure that the swim ladder is raised out of the water before moving off.
- Make sure that the steering is correctly positioned before starting.
- All persons on board must wear an appropriate life vest when on deck.

9.7 Checklist: Before anchoring

1. Check the chart to see if anchoring is permitted in the area.
2. Listen to the weather forecast for the area and take note of the expected wind conditions.
3. Switch on the echo sounder.
4. Study the seabed conditions and make sure that there is good holding ground.
5. Check that the safety chain has been released from the anchor.
6. Wait until you have reached the intended anchoring point before lowering the anchor.

© 2026 Axopar Boats / Brabus Marine

7. Let out the anchor line equal to at least three times the depth of the water.
8. Put the engine in astern to check that the anchor has taken hold (only when bow anchoring).
9. Note your position on the GPS. Regularly check that the boat has not moved from its position.
10. Set the echo sounder to “Anchor Watch”.

⚠ WARNING Always fix the anchor in such a way that it is securely fastened onto the boat. An anchor that falls off when under way may cause serious damage to the boat and mortal danger to the crew.

9.8 Checklist: Before winter lay-up

- Wash the hull and bottom immediately after lifting the vessel out of the water.
- Wash all parts inside, also under the floorboards.
- Leave all lockers, drawers, and cabin and wardrobe doors open.
- Remove the carpets.
  - Store the carpets and cushions indoors in a dry place.
  - If this is not possible, make sure that the cushions are dry and position them on their side.
- Disconnect and service the air conditioner.
  - Switch off the power and disconnect the power supply.
  - Close the seacocks.
  - Drain the cooling water circuits and pumps, or fill them with antifreeze.
  - Check the more detailed instruction in the manufacturer's manual.
- Disconnect and service the fridge.
  - Switch off the power and disconnect the power supply.
  - Defrost the fridge.
  - Clean and dry the exterior and the interior of the fridge.
  - Empty and dry the condensate water tray.
  - Leave the door slightly ajar to enable ventilation.
  - Check the more detailed instruction in the manufacturer's manual.
- Ensure good ventilation in the boat.
- Make sure that there is no water beneath the fuel tank. Any water present can be extracted using the suction pipe that is attached to the tank's exterior.
- Make sure that the rubber O-ring between the fuel tank inlet and the fuel tank cap is intact. Otherwise there is risk of water getting inside the fuel tank.

NOTICE If the batteries are left aboard, make sure they are fully charged, otherwise the batteries can freeze and crack.

© 2026 Axopar Boats / Brabus Marine

9.9 Checklist: Before launching

1. Remove the tarpaulin in good time before launching.
2. Wash the hull with a regular shampoo and a soft brush.
3. Wax the hull, if necessary.

   Use a standard boat wax.
4. If there are small scratches on the hull or if some of the surface gelcoat has lost its shine, use a rubbing compound on these areas before polishing.
5. Paint the bottom with antifouling paint.
6. If the batteries have been removed, put them back and check the electrolyte level in the cells.

   Check the condition of the batteries.
7. Check all cables, clamps, engine mountings and other fastenings.
8. Check the steering before launching.
9. Check the instrumentation.
10. Close all water drain plugs.
11. Check that the seacocks are tight and in order, check for any frost damage.
12. Check all pipes, hoses and cocks.
13. Make a note of any frost damage.

9.10 Checklist: Fuel system

Check the fuel system before launch and winter lay-up:

- Ensure the fuel fill caps are properly labelled.
- Check that the fuel fill cap is retained (hinge or chain) to prevent falling overboard.
- Inspect any O-rings or gaskets for damage.
- Carefully inspect all hoses, primer bulbs, filters, and connections; recommend replacement as needed.
- Verify proper and secure routing of ventilation ducts.
- Inspect and lean, if possible, all vent fittings.

⚠ WARNING Avoid serious injury or death from fire or explosion resulting from leaking fuel. Inspect system for leaks at least once a year.

9.11 Maintenance log

Regular maintenance tasks are presented in the following table. If you feel confident enough, you can perform all these tasks yourself. If not, please contact your local Axopar dealer for help.

© 2026 Axopar Boats / Brabus Marine

Depending on vessel model and components, every task might not be relevant.

© 2026 Axopar Boats / Brabus Marine

MAINTENANCE LOG	Frequency				
Task to be performed	Every trip	Every month	Every 3 months	Every 6 months	Annually
Bilge system - Remove, clean and inspect bilge pump, check valve and its surroundings for damage or debris that may reduce the performance of the pump	●				
Waste system - Replace the no-smell carbon filters					●
Waste system - Run the macerator pump					●
Heating system - Run the heater for 10 minutes		●			
Air conditioning system - Clean air filter, seawater strainer and check the system for leaks		●			
Water system - Clean inline filter			●		
Inspect Zinc anodes - Replace all zinc anodes if 50 % has been eaten up				●	
Fire extinguisher inspection					●
CO alarm - Push test button for 1 sec			●		
Smoke alarm - Push test button for 3 sec			●		
Seacocks - Turn handle Open and Close					●
Batteries - Charge state, terminals securely attached and free from corrosion					●
LPG system - Check condition of LPG lines, connectors and LPG shut off valve					●
Fuel system - Check condition of fuel lines, connectors and fuel shutoff valves					●
Inspect fuel tank compartment bilge for water				●	
Livewell pump - Check condition of hoses and connectors			●		
Gelcoat waxing				●	
Clean hull & deck from saltwater	●				
Keep bilge dry and clean	●				
Boat covers - Clean upholstery covers and sunroof cover				●	

© 2026 Axopar Boats / Brabus Marine

10 Appendix II: Fuel system

© 2026 Axopar Boats / Brabus Marine

REVISIONS			
REV.	DESCRIPTION	DATE	APPROVED
A	Changed routing due to new tank box, less strips used	07.06.2022	VVU
D	Surge protector added	26. 9. 2024.	MPE
E	Updated according feedback.	15. 1. 2025.	SKei

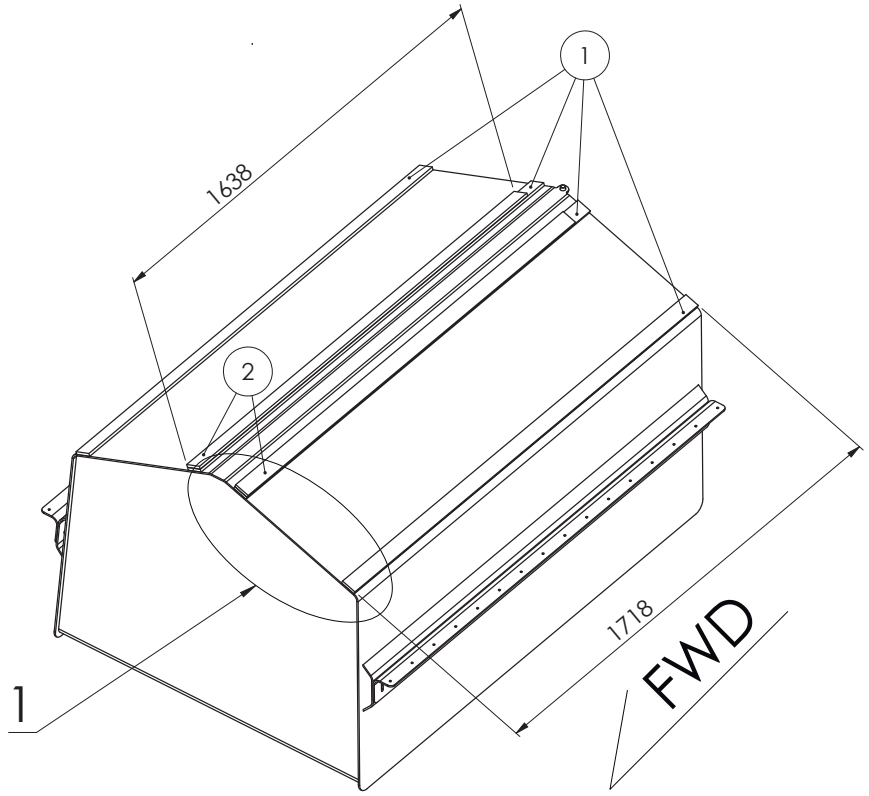

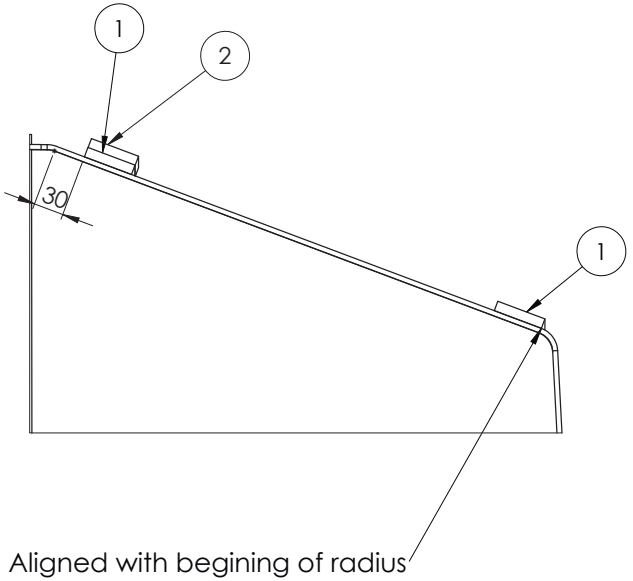

PART NO.	ITEM	ITEM	MATERIAL	SIZE, CAPACITY	QTY.
1	AXO3000305, A	BASE STRIP	NEOPRENE	1718x50x10	4
2		2nd STRIP		1638x50x10	2

This document and the information contained in it is proprietary and confidential information of Axopar Boats Oy. Neither this document nor any of the information contained herein may be reproduced, disclosed to others, or used for any purpose other than for the purpose it has been provided without the prior written permission of Axopar Boats Oy.

AXOPAR

ITEM	REV
AXO9000149	F

BOAT MODEL	MODEL YEAR	DRAWING	REV
AX45	2022	DRW00623	E

	BY	DATE	DESCRIPTION	SCALE	PAGE
CREATED	DUJKLE	15.11.2021	Fuel system, Tank preinstallation	1:15	1 / 4
CHECKED	L.C.	15.11.2021	TECHNICAL DESCRIPTION		
ACCEPTED	RWE	17.11.2021	Manufacturing specification		

PULS YACHT DESIGN

HULL TOP VIEW

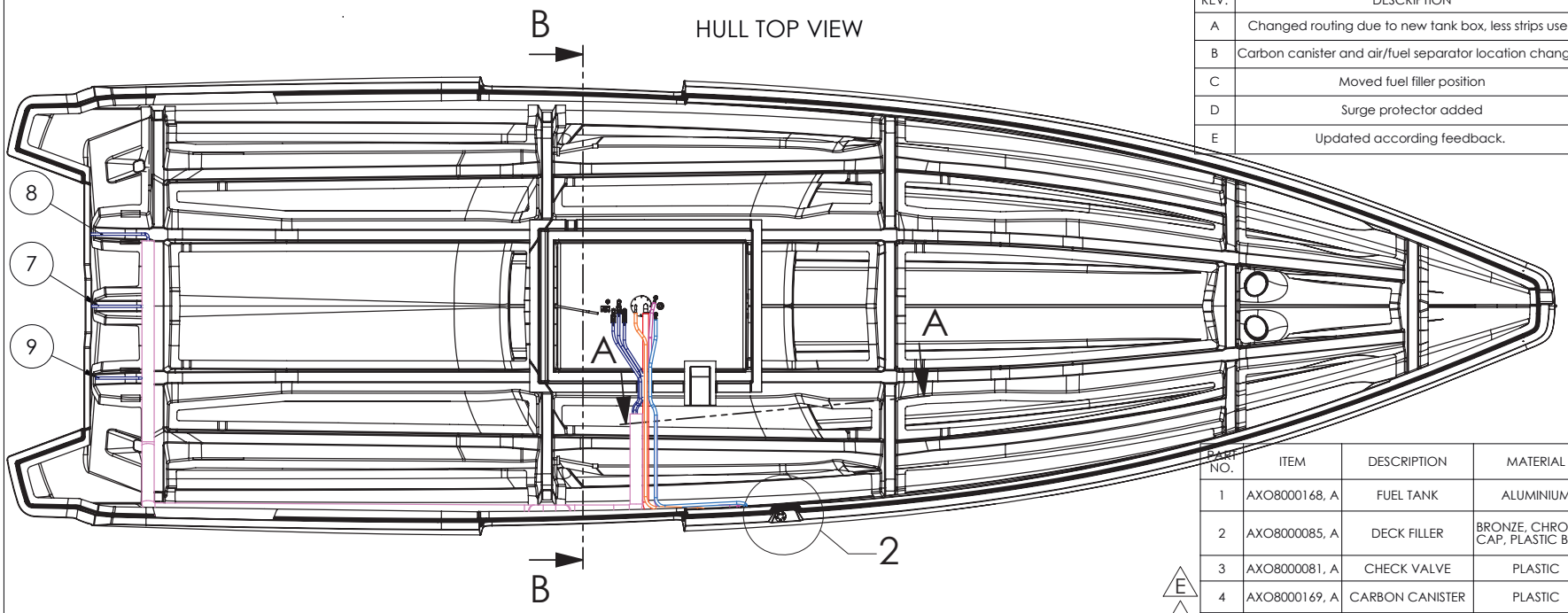

REVISIONS			
REV.	DESCRIPTION	DATE	APPROVED
A	Changed routing due to new tank box, less strips used	07.06.2022	VVU
B	Carbon canister and air/fuel separator location changed	16.08.2022	VVU
C	Moved fuel filler position	7.12.2022.	
D	Surge protector added	26. 9. 2024.	MPE
E	Updated according feedback.	15. 1. 2025.	SKei

PART NO.	ITEM	DESCRIPTION	MATERIAL	SIZE, CAPACITY	QTY.
1	AXO8000168, A	FUEL TANK	ALUMINIUM	1393 L	1
2	AXO8000085, A	DECK FILLER	BRONZE, CHROMED CAP, PLASTIC BODY	ø38MM / ø16MM	1
3	AXO8000081, A	CHECK VALVE	PLASTIC	ø38MM, (1-1/2")	1
E 4	AXO8000169, A	CARBON CANISTER	PLASTIC	ø16MM/ ø16MM (5/8" - 5/8")	1
E 5	AXO8000522, A	Y-CONNECTOR			1
6	AXO8000082, A	TANK VENTILATOR		ø16MM, (5/8")	1
7	AXO8000042, A	FUEL HOSE	NBR RUBBER	ø12	1
8	AXO8000042, A	FUEL HOSE	NBR RUBBER	ø12	1
9	AXO8000042, A	FUEL HOSE	NBR RUBBER	ø12	1
10	AXO8000040, A	FUEL HOSE	NBR RUBBER	ø38	1
11	AXO8000041, A	FUEL HOSE	NBR RUBBER	ø16	1
12	AXO8000041, A	FUEL HOSE	NBR RUBBER	ø16	1
13	AXO8000041, A	FUEL HOSE	NBR RUBBER	ø16	1
14	AXO8000041, A	FUEL HOSE	NBR RUBBER	ø16	1
15	AXO8000041, A	FUEL HOSE	NBR RUBBER	ø16	1
16	AXO0000241, A	PROTECTIVE HOSE	PLASTIC	Ø110/Ø92	1
17	AXO8000122, A	IN-LINE SURGE PROTECTOR	PLASTIC	ø16	1

ISO VIEW

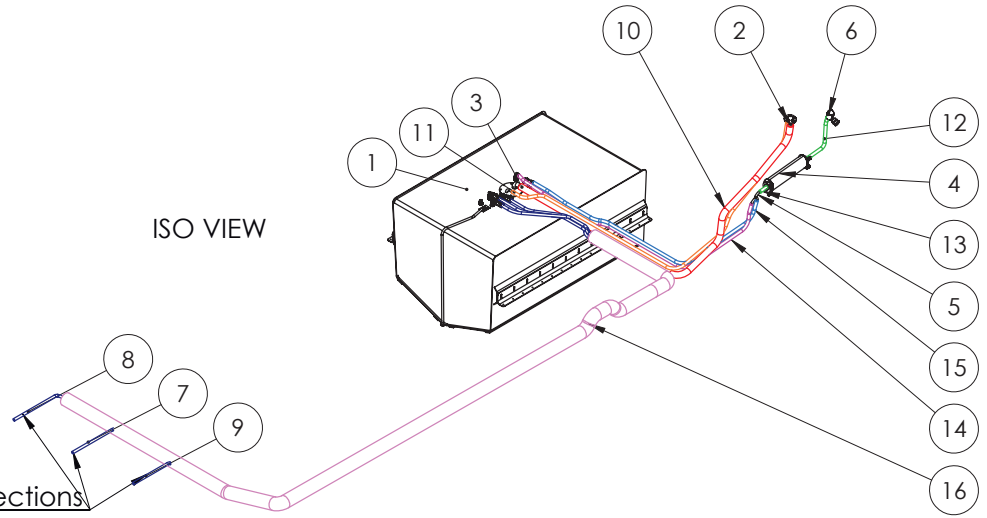

Engine connections

This document and the information contained in it is proprietary and confidential information of Axopar Boats Oy. Neither this document nor any of the information contained herein may be reproduced, disclosed to others, or used for any purpose other than for the purpose it has been provided without the prior written permission of Axopar Boats Oy.

AXOPAR

ITEM	REV
AXO9000149	F

BOAT MODEL	MODEL YEAR	DRAWING	REV
AX45	2022	DRW00623	E

	BY	DATE	DESCRIPTION	SCALE	PAGE
CREATED	DUJKLE	15.11.2021	Fuel system	1:40	2 / 4
CHECKED	L.C.	15.11.2021	TECHNICAL DESCRIPTION		
ACCEPTED	RWE	17.11.2021	Manufacturing specification		

PULS YACHT DESIGN

REVISIONS			
REV.	DESCRIPTION	DATE	APPROVED
A	Changed routing due to new tank box, less strips used	07.06.2022	VVU
B	Carbon canister and air/fuel separator location changed	16.08.2022	VVU
C	Moved fuel filler position	7.12.2022.	
D	Surge protector added	26. 9. 2024.	MPE

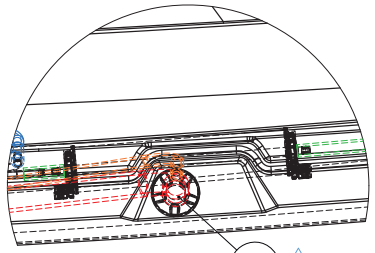

DETAIL 2
SCALE 1 : 10

Deck - Hull back view

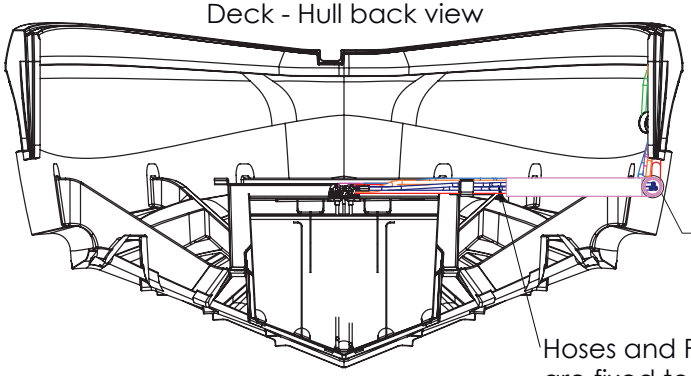

Hoses and PVC conduit are fixed to deck.

SECTION B-B
SCALE 1 : 30

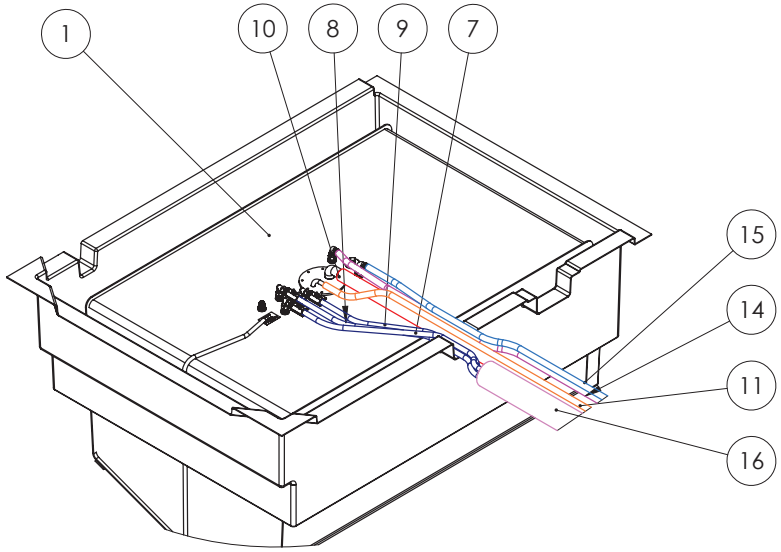

PVC Bulkheads - Fuel tank view
SCALE 1 : 20

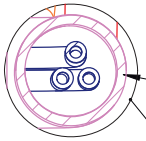

PVC conduit

Engine hoses (Pos. 7, 8 and 9)

DETAIL 3
SCALE 1 : 5

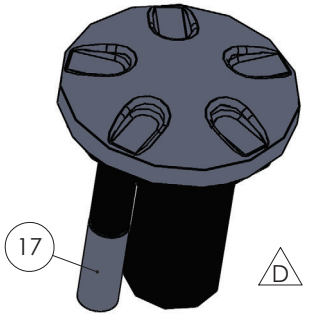

SURGE PROTECTOR ON IN-LINE
SCALE 1 : 2

This document and the information contained in it is proprietary and confidential information of Axopar Boats Oy. Neither this document nor any of the information contained herein may be reproduced, disclosed to others, or used for any purpose other than for the purpose it has been provided without the prior written permission of Axopar Boats Oy.

AXOPAR

ITEM	REV
AXO9000149	F

BOAT MODEL	MODEL YEAR	DRAWING	REV
AX45	2022	DRW00623	E

	BY	DATE	DESCRIPTION	SCALE	PAGE
CREATED	DUJKLE	15.11.2021	Fuel system	1:40	3 / 4
CHECKED	L.C.	15.11.2021	TECHNICAL DESCRIPTION		
ACCEPTED	RWE	17.11.2021	Manufacturing specification		

PULS YACHT DESIGN

REVISIONS			
REV.	DESCRIPTION	DATE	APPROVED
E	Updated according feedback.	15.01.2024	SKei

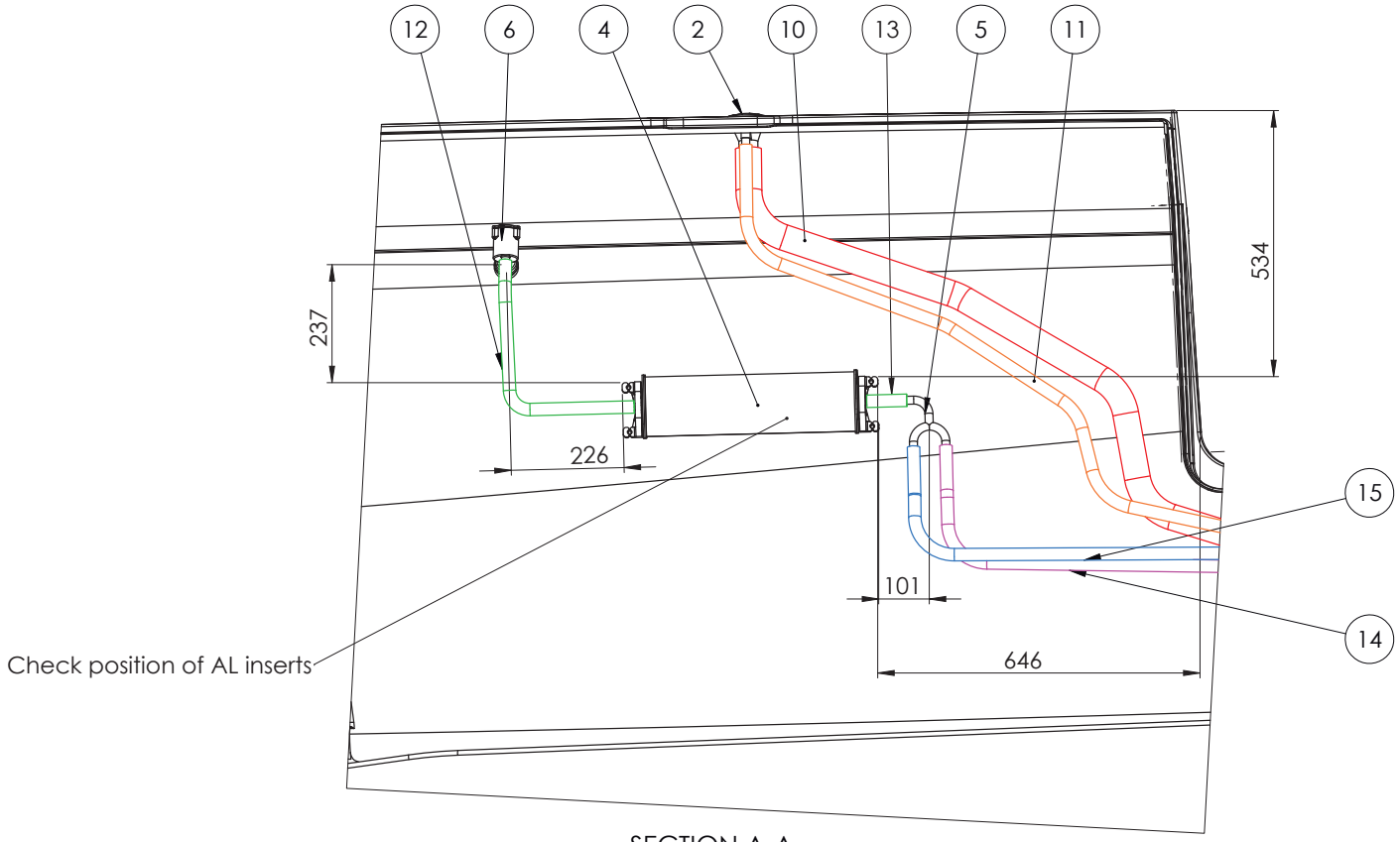

SECTION A-A
SCALE 1 : 10

Note:

-Shown hoses should be routed upwards at all time

-No carbon canister on EU boats.

This document and the information contained in it is proprietary and confidential information of Axopar Boats Oy. Neither this document nor any of the information contained herein may be reproduced, disclosed to others, or used for any purpose other than for the purpose it has been provided without the prior written permission of Axopar Boats Oy.

AXOPAR				ITEM AXO9000149	REV F
BOAT MODEL AX45			MODEL YEAR 2022	DRAWING DRW00623	REV E
	BY	DATE	DESCRIPTION	SCALE 1:40	PAGE 4 / 4
CREATED	DUJKLE	15.11.2021	Fuel system		
CHECKED	L.C.	15.11.2021	TECHNICAL DESCRIPTION		
ACCEPTED	RWE	17.11.2021	Manufacturing specification		

PULS YACHT DESIGN

11 Appendix III: Electrical diagrams

© 2026 Axopar Boats / Brabus Marine

Axopar 45

ELECTRICAL DIAGRAM / PRODUCTION DRAWINGS

DOCUMENT INCLUDES:
BOAT HARNESS / PANEL GENERAL LAYOUT
ELECTRICAL STRUCTURE OF 12V DC SYSTEM (EURO/USA)
12V DC DIAGRAM
PRODUCTION DRAWINGS

NOTE! ALL CABLE AREAS ARE IN METRIC SYSTEM (mm2).

REVISION C3

Navix disclaims all liability for any issues that may arise from the use of devices not specified in this documentation.
The electrical system design is based exclusively on the devices listed herein, or on the estimated maximum currents for each circuit when the specific device model was unknown at the time of engineering.
Any substitution of devices or the use of devices with higher ampacity than specified herein voids all warranties and releases Navix from any responsibility for system performance or safety.

Date of modification	Modified by	Description
11.6.2024	TuM	C3: 2005065; Rev-C3 update, Liability text added.
24.3.2023	TuM	A1: 2004274; NOT MODIFIED.
30.3.2023	TuM	B2: 2004274;

Date	30.10.2023
Drawing by	TuM
Sheet rev.	3
Project rev.	C

Copyright by

Boat	Sub-product code	Product code	Project ID
Axopar			

Boat model	Title	HL	Sheet
45	COVER PAGE	Loc	1/ 444

HARNESS STRUCTURE

INDIVIDUAL HARNESSES:

- 40365 SPEAKER CABLES
- 40441 BREAK OFF SWITCH HARNESS

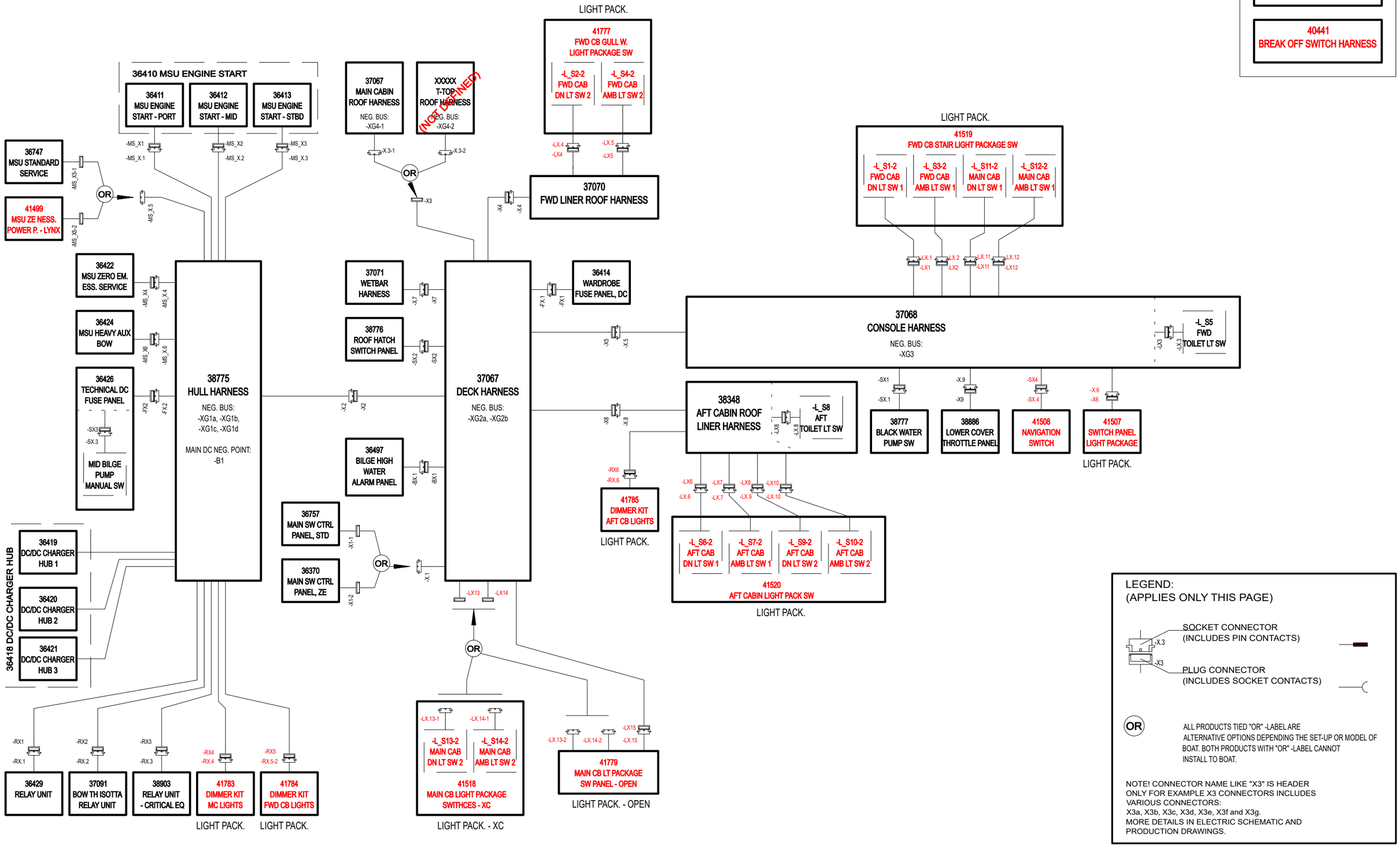

LEGEND:
(APPLIES ONLY THIS PAGE)

SOCKET CONNECTOR
(INCLUDES PIN CONTACTS)

PLUG CONNECTOR
(INCLUDES SOCKET CONTACTS)

OR — ALL PRODUCTS TIED "OR" -LABEL ARE ALTERNATIVE OPTIONS DEPENDING THE SET-UP OR MODEL OF BOAT. BOTH PRODUCTS WITH "OR" -LABEL CANNOT INSTALL TO BOAT.

NOTE! CONNECTOR NAME LIKE "X3" IS HEADER ONLY FOR EXAMPLE X3 CONNECTORS INCLUDES VARIOUS CONNECTORS:
X3a, X3b, X3c, X3d, X3e, X3f and X3g.
MORE DETAILS IN ELECTRIC SCHEMATIC AND PRODUCTION DRAWINGS.

Date of modification	Modified by	Description
5.6.2024	TuM	C3: 2005065; ZE BMS (LYNX), MY25 LIGHT SYSTEM & BRK OFF SW H. ADDED, SPKR H SEPARATED.
24.3.2023	TuM	A1: 2004274; NOT MODIFIED.
30.3.2023	TuM	B2: 2004274; HARNESS STRUCTURE ADDED.

Date	30.10.2023
Drawing by	TuM
Sheet rev.	3
Project rev.	C

Copyright by NAVIX

Boat: Axopar	Sub-product code	Product code	Project ID
Boat model: 45	Title: STRUCTURE: 12Vdc	HL / Loc	Sheet: 2 / 444

GENERAL LAYOUT

37085 Axopar 45 STANDARD 230VAC SYSTEM - EU
COMPLETE SYSTEM, WITH STD AND OPTIONS.

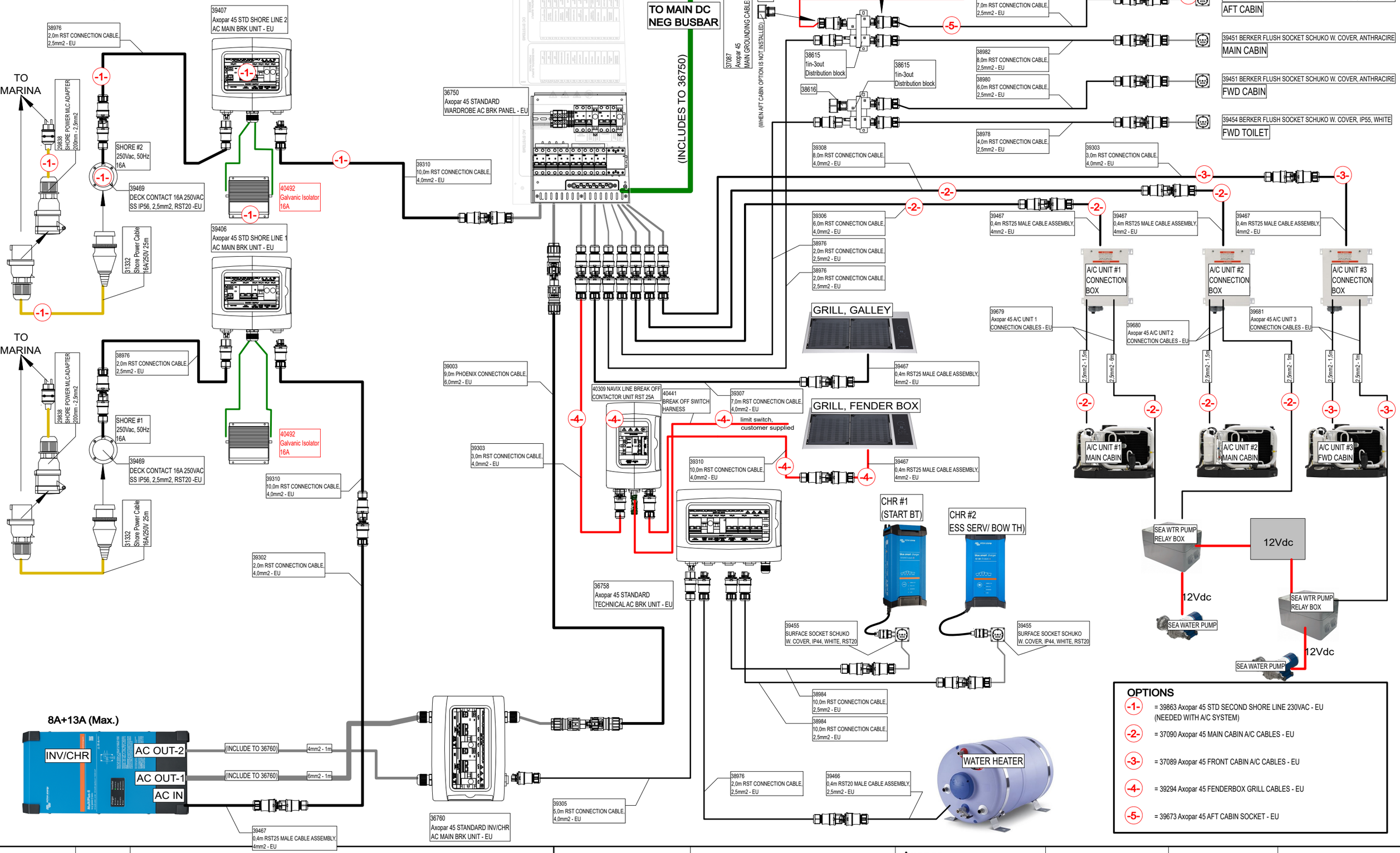

OPTIONS

- -1- = 39863 Axopar 45 STD SECOND SHORE LINE 230VAC - EU (NEEDED WITH A/C SYSTEM)
- -2- = 37090 Axopar 45 MAIN CABIN A/C CABLES - EU
- -3- = 37089 Axopar 45 FRONT CABIN A/C CABLES - EU
- -4- = 39294 Axopar 45 FENDERBOX GRILL CABLES - EU
- -5- = 39673 Axopar 45 AFT CABIN SOCKET - EU

Date of modification	Modified by	Description
29.5.2024	PF/TuM	C3: 2004890; Grill safety SW change, 2005065; Gal isol change, AFT toilet socket added.

Date	30.10.2023
Drawing by	
Sheet rev.	3
Project rev.	C

NAVIX
Copyright by

Axopar			
Boat	Sub-product code	Product code	Project ID
45	STRUCTURE: 230VAC STANDARD - EU	HL	3 / 444
Boat model	Title	Loc	Sheet

GENERAL LAYOUT

37086 Axopar 45 ZERO EMISSION 230VAC SYSTEM - EU
COMPLETE SYSTEM, WITH STD AND OPTIONS.

TO MARINA
38976 2,0m RST CONNECTION CABLE, 2,5mm2 - EU
29838 SHORE POWER MLC ADAPTER 200mm - 2,5mm2
SHORE #2 250Vac, 50Hz 16A
39469 DECK CONTACT 16A 250VAC SS IP56, 2,5mm2, RST20 -EU
31332 Shore Power Cable 16A/250V 25m
39409 Axopar 45 ZERO EM SHORE LINE 2 AC MAIN BRK UNIT - EU
40492 Galvanic Isolator 16A
39408 Axopar 45 ZERO EM SHORE LINE 1 AC MAIN BRK UNIT - EU
TO MARINA
38976 2,0m RST CONNECTION CABLE, 2,5mm2 - EU
29838 SHORE POWER MLC ADAPTER 200mm - 2,5mm2
SHORE #1 250Vac, 50Hz 16A
39469 DECK CONTACT 16A 250VAC SS IP56, 2,5mm2, RST20 -EU
31332 Shore Power Cable 16A/250V 25m
40492 Galvanic Isolator 16A
39310 10,0m RST CONNECTION CABLE, 4,0mm2 - EU
36415 Axopar 45 ZERO EM WARDROBE AC BRK PANEL - EU
(INCLUDES TO 36415)
TO MAIN DC NEG BUSBAR
TO MAIN GND POINT
37087 Axopar 45 MAIN GROUNDING CABLES - EU
(WHEN AFT CABIN OPTION IS NOT INSTALLED)
38616 (WHEN AFT CABIN OPTION IS NOT INSTALLED)
38984 10,0m RST CONNECTION CABLE, 2,5mm2 - EU
38981 7,0m RST CONNECTION CABLE, 2,5mm2 - EU
38615 1in-3out Distribution block
38982 8,0m RST CONNECTION CABLE, 2,5mm2 - EU
38980 6,0m RST CONNECTION CABLE, 2,5mm2 - EU
38978 4,0m RST CONNECTION CABLE, 2,5mm2 - EU
39454 BERKER FLUSH SOCKET SCHUKO W. COVER, IP55, WHITE
AFT TOILET
39451 BERKER FLUSH SOCKET SCHUKO W. COVER, ANTHRACITE
AFT CABIN
MAIN CABIN
FWD CABIN
39454 BERKER FLUSH SOCKET SCHUKO W. COVER, IP55, WHITE
FWD TOILET
39308 8,0m RST CONNECTION CABLE, 4,0mm2 - EU
39303 3,0m RST CONNECTION CABLE, 4,0mm2 - EU
39306 6,0m RST CONNECTION CABLE, 4,0mm2 - EU
38976 2,0m RST CONNECTION CABLE, 2,5mm2 - EU
38976 2,0m RST CONNECTION CABLE, 2,5mm2 - EU
39467 0,4m RST25 MALE CABLE ASSEMBLY, 4mm2 - EU
A/C UNIT #1 CONNECTION BOX
A/C UNIT #2 CONNECTION BOX
A/C UNIT #3 CONNECTION BOX
39679 Axopar 45 A/C UNIT 1 CONNECTION CABLES - EU
39680 Axopar 45 A/C UNIT 2 CONNECTION CABLES - EU
39681 Axopar 45 A/C UNIT 3 CONNECTION CABLES - EU
2,5mm2 - 1,5m
2,5mm2 - 6m
2,5mm2 - 1m
A/C UNIT #1 MAIN CABIN
A/C UNIT #2 MAIN CABIN
A/C UNIT #3 FWD CABIN
GRILL, GALLEY
GRILL, FENDER BOX
39309 9,0m RST CONNECTION CABLE, 4,0mm2 - EU
39309 9,0m RST CONNECTION CABLE, 4,0mm2 - EU
39303 3,0m RST CONNECTION CABLE, 4,0mm2 - EU
39310 10,0m RST CONNECTION CABLE, 4,0mm2 - EU
39310 10,0m RST CONNECTION CABLE, 4,0mm2 - EU
39301 1,0m RST CONNECTION CABLE, 4,0mm2 - EU
39302 2,0m RST CONNECTION CABLE, 4,0mm2 - EU
40309 NAVIX LINE BREAK OFF CONTACTOR UNIT RST 25A
40441 BREAK OFF SWITCH HARNESS
39307 7,0m RST CONNECTION CABLE, 4,0mm2 - EU
limit switch, customer supplied
39310 10,0m RST CONNECTION CABLE, 4,0mm2 - EU
39467 0,4m RST25 MALE CABLE ASSEMBLY, 4mm2 - EU
39467 0,4m RST20 MALE CABLE ASSEMBLY, 4mm2 - EU
CHR #1 (START BT)
CHR #2 ESS SERV/ BOW TH)
39455 SURFACE SOCKET SCHUKO W. COVER, IP44, WHITE, RST20
39455 SURFACE SOCKET SCHUKO W. COVER, IP44, WHITE, RST20
38984 10,0m RST CONNECTION CABLE, 2,5mm2 - EU
38984 10,0m RST CONNECTION CABLE, 2,5mm2 - EU
38976 2,0m RST CONNECTION CABLE, 2,5mm2 - EU
39466 0,4m RST20 MALE CABLE ASSEMBLY, 2,5mm2 - EU
WATER HEATER
SEA WTR PUMP RELAY BOX
12Vdc
12Vdc
SEA WATER PUMP
SEA WTR PUMP RELAY BOX
12Vdc
SEA WATER PUMP
8A+13A (Max.)
INV/CHR #2
AC OUT-2
AC OUT-1
AC IN
(INCLUDE TO 39291)
4mm2 - 1m
(INCLUDE TO 39290)
(INCLUDE TO 39291)
4mm2 - 1m
39467 0,4m RST25 MALE CABLE ASSEMBLY, 4mm2 - EU
8A+13A (Max.)
INV/CHR #1
AC OUT-2
AC OUT-1
AC IN
(INCLUDE TO 39290)
10mm2 - 1m
10mm2 - 1m
39467 0,4m RST25 MALE CABLE ASSEMBLY, 4mm2 - EU
39305 5,0m RST CONNECTION CABLE, 4,0mm2 - EU
39291 Axopar 45 ZERO EM INV/CHR AC OUT 2 BRK UNIT - EU
39290 Axopar 45 ZERO EM INV/CHR AC OUT 1 BRK UNIT - EU
36430 Axopar 45 ZERO EM TECHNICAL AC BRK UNIT - EU

OPTIONS

-1- = 37088 Axopar 45 ZERO EM SECOND SHORE LINE 230VAC - EU (NEEDED WITH A/C SYSTEM)
-2- = 37090 Axopar 45 MAIN CABIN A/C CABLES - EU
-3- = 37089 Axopar 45 FRONT CABIN A/C CABLES - EU
-4- = 39294 Axopar 45 FENDERBOX GRILL CABLES - EU
-5- = 39673 Axopar 45 AFT CABIN SOCKET - EU

29.5.2024	PF/TuM	C3: 2004890; Grill safety SW change, 2005065; Gal isol change, AFT toilet socket added.	Date	30.10.2023	NAVIX	Axopar		
			Drawing by			Boat	Sub-product code	Product code	Project ID
14.9.2023	TuM	B2:2004274; STRUCTURE ADDED.	Sheet rev.	3		45	STRUCTURE: 230Vac ZERO EMISSION - EU	HL	4 / 444
Date of modification	Modified by	Description	Project rev.	C	Copyright by	Boat model	Title	Loc	Sheet

GENERAL LAYOUT

38352 Axopar 45 BASIC 120VAC SYSTEM - USA
COMPLETE SYSTEM, WITH STD AND OPTIONS.

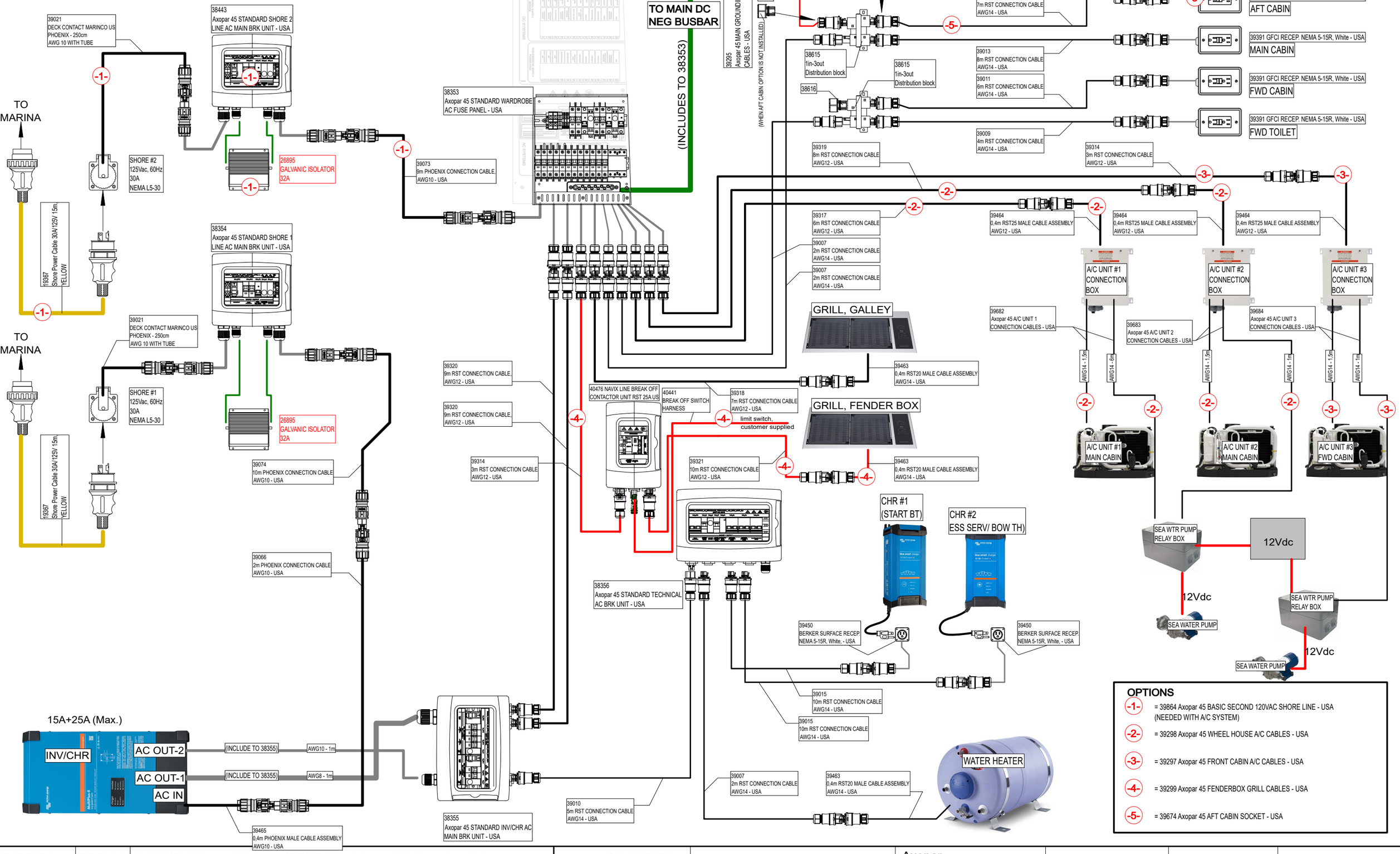

29.5.2024	PF/TuM	C3: 2004890; Grill safety SW change, 2005065; Gal isol change, AFT toilet socket added.	Date	30.10.2023		Axopar			
			Drawing by	TuM		Boat	Sub-product code	Product code	Project ID
4.9.2023	TuM	B2: 2004274; STRUCTURE ADDED.	Sheet rev.	3	NAVIX	45	STRUCTURE: 120Vac BASIC - USA	HL	5 / 444
Date of modification	Modified by	Description	Project rev.	C	Copyright by	Boat model	Title	Loc	Sheet

GENERAL LAYOUT

38357 Axopar 45 ZERO EMISSION 120VAC SYSTEM - USA
COMPLETE SYSTEM, WITH STD AND OPTIONS.

39021 DECK CONTACT MARINCO US PHOENIX - 250cm AWG 10 WITH TUBE
38444 Axopar 45 ZERO EM SHORE 2 AC LINE MAIN BRK UNIT - USA
TO MARINA
SHORE #2 125Vac, 60Hz 30A NEMA L5-30
19367 Shore Power Cable 30A/125V 15m YELLOW
26895 GALVANIC ISOLATOR 32A
38358 Axopar 45 ZERO EM WARDROBE AC FUSE PANEL - USA
39073 9m PHOENIX CONNECTION CABLE AWG10 - USA
38359 Axopar 45 ZERO EM SHORE 1 AC LINE MAIN BRK UNIT - USA
39021 DECK CONTACT MARINCO US PHOENIX - 250cm AWG 10 WITH TUBE
TO MARINA
SHORE #1 125Vac, 60Hz 30A NEMA L5-30
19367 Shore Power Cable 30A/125V 15m YELLOW
26895 GALVANIC ISOLATOR 32A
39073 9m PHOENIX CONNECTION CABLE AWG10 - USA
39074 10m PHOENIX CONNECTION CABLE AWG10 - USA
39314 3m RST CONNECTION CABLE AWG12 - USA
39074 10m PHOENIX CONNECTION CABLE AWG10 - USA
39065 1m PHOENIX CONNECTION CABLE AWG10 - USA
39066 2m PHOENIX CONNECTION CABLE AWG10 - USA
39293 Axopar 45 ZERO EM INV/CHR AC OUT 2 BRK UNIT - USA
15A+25A (Max.)
INV/CHR #2
AC OUT-2
AC OUT-1
AC IN
(INCLUDE TO 39293) AWG10 - 1m
(INCLUDE TO 39292)
(INCLUDE TO 39293) AWG10 - 1m
39465 0,4m PHOENIX MALE CABLE ASSEMBLY AWG10 - USA
15A+25A (Max.)
INV/CHR #1
AC OUT-2
AC OUT-1
AC IN
(INCLUDE TO 39292) AWG6 - 1m
AWG6 - 1m
39465 0,4m PHOENIX MALE CABLE ASSEMBLY AWG10 - USA
39292 Axopar 45 ZERO EM INV/CHR AC OUT 1 BRK UNIT - USA
38362 Axopar 45 ZERO EM TECHNICAL AC BRK UNIT - USA
39010 5m RST CONNECTION CABLE AWG14 - USA
40476 NAVIX LINE BREAK OFF CONTACTOR UNIT RST 25A US
40441 BREAK OFF SWITCH HARNESS
39318 7m RST CONNECTION CABLE AWG12 - USA
limit switch, customer supplied
39321 10m RST CONNECTION CABLE AWG12 - USA
39464 0,4m RST25 MALE CABLE ASSEMBLY AWG12 - USA
CHR #1 (START BT)
CHR #2 ESS SERV/ BOW TH)
39450 BERKER SURFACE RECEP. NEMA 5-15R, White, - USA
39015 10m RST CONNECTION CABLE AWG14 - USA
39007 2m RST CONNECTION CABLE AWG14 - USA
39463 0,4m RST20 MALE CABLE ASSEMBLY AWG14 - USA
WATER HEATER
TO MAIN DC NEG BUSBAR
(INCLUDES TO 38358)
TO MAIN GND POINT
38616 (WHEN AFT CABIN OPTION IS NOT INSTALLED)
39015 10m RST CONNECTION CABLE AWG14 - USA
39285 Axopar 45 MAIN GROUNDING CABLES - USA
(WHEN AFT CABIN OPTION IS NOT INSTALLED)
38615 1in-3out Distribution block
39012 7m RST CONNECTION CABLE AWG14 - USA
39013 8m RST CONNECTION CABLE AWG14 - USA
39011 6m RST CONNECTION CABLE AWG14 - USA
39009 4m RST CONNECTION CABLE AWG14 - USA
39319 8m RST CONNECTION CABLE AWG12 - USA
39314 3m RST CONNECTION CABLE AWG12 - USA
39317 6m RST CONNECTION CABLE AWG12 - USA
39007 2m RST CONNECTION CABLE AWG14 - USA
39007 2m RST CONNECTION CABLE AWG14 - USA
GRILL, GALLEY
GRILL, FENDER BOX
39464 0,4m RST25 MALE CABLE ASSEMBLY AWG12 - USA
39682 Axopar 45 A/C UNIT 1 CONNECTION CABLES - USA
39683 Axopar 45 A/C UNIT 2 CONNECTION CABLES - USA
39684 Axopar 45 A/C UNIT 3 CONNECTION CABLES - USA
A/C UNIT #1 CONNECTION BOX
A/C UNIT #2 CONNECTION BOX
A/C UNIT #3 CONNECTION BOX
AWG14 - 1.5m
AWG14 - 6m
AWG14 - 1.5m
AWG14 - 7m
AWG14 - 1.5m
AWG14 - 1m
A/C UNIT #1 MAIN CABIN
A/C UNIT #2 MAIN CABIN
A/C UNIT #3 FWD CABIN
SEA WTR PUMP RELAY BOX
12Vdc
12Vdc
SEA WATER PUMP
SEA WTR PUMP RELAY BOX
12Vdc
SEA WATER PUMP
39391 GFCI RECEP. NEMA 5-15R, White - USA
AFT TOILET
AFT CABIN
MAIN CABIN
FWD CABIN
FWD TOILET

OPTIONS

- -1- = 39296 Axopar 45 ZERO EM SECOND 120VAC SHORE LINE - USA (NEEDED WITH A/C SYSTEM)
- -2- = 39298 Axopar 45 WHEEL HOUSE A/C CABLES - USA
- -3- = 39297 Axopar 45 FRONT CABIN A/C CABLES - USA
- -4- = 39299 Axopar 45 FENDERBOX GRILL CABLES - USA
- -5- = 39674 Axopar 45 AFT CABIN SOCKET - USA

Date of modification	Modified by	Description
29.5.2024	PF/TuM	C3: 2004890; Grill safety SW change, 2005065; Gal isol change, AFT toilet socket added.
21.8.2023	TuM	B2: 2004274; STRUCTURE ADDED

Date 30.10.2023
Drawing by TuM
Sheet rev. 3
Project rev. C

NAVIX
Copyright by

Boat	Sub-product code	Product code	Project ID
Axopar			
Boat model	Title		Loc
45	STRUCTURE: 120Vac ZERO EMISSION - USA	HL	Sheet 6 / 444

DC MAIN SYSTEMS

Date of modification	Modified by	Description							
30.10.2023	PF	C3: 2004890; NOT MODIFIED	Date	30.10.2023	Copyright by NAVIX	Axopar Boat			
24.3.2023	TuM	A1: 2004274; NOT MODIFIED.	Drawing by	TuM					
30.3.2023	TuM	B2: 2004274;	Sheet rev.	3		45 Boat model	------ DC MAIN SYSTEMS Title	HL----- Loc	7 / 444 Sheet
			Project rev.	C					

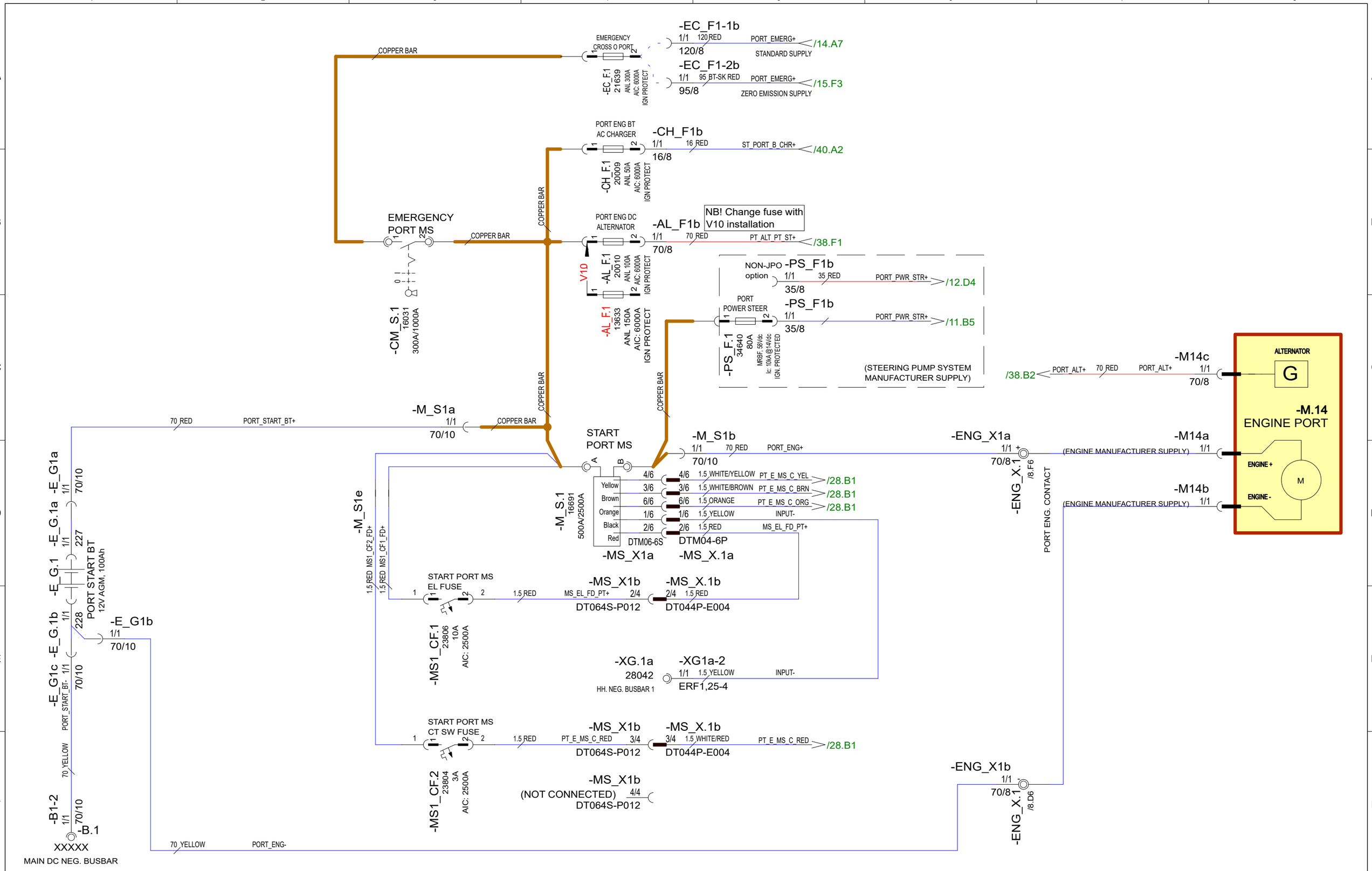

30.10.2023	PF	C3: 2004890; V10 FUSES	Date	30.10.2023	NAVIX	Axopar				
24.3.2023	TuM	A1: 2004274; NOT MODIFIED.	Drawing by	TuM		Boat	Sub-product code	Product code	Project ID	
30.3.2023	TuM	B2: 2004274; -XG1a-2, 227 & 228 TO E_G1 ADDED	Sheet rev.	3		45	DC: ENGINE PORT - DIAGRAM	HL	8 / 444	
Date of modification	Modified by	Description	Project rev.	C	Copyright by	Boat model	Title	Loc	Sheet	

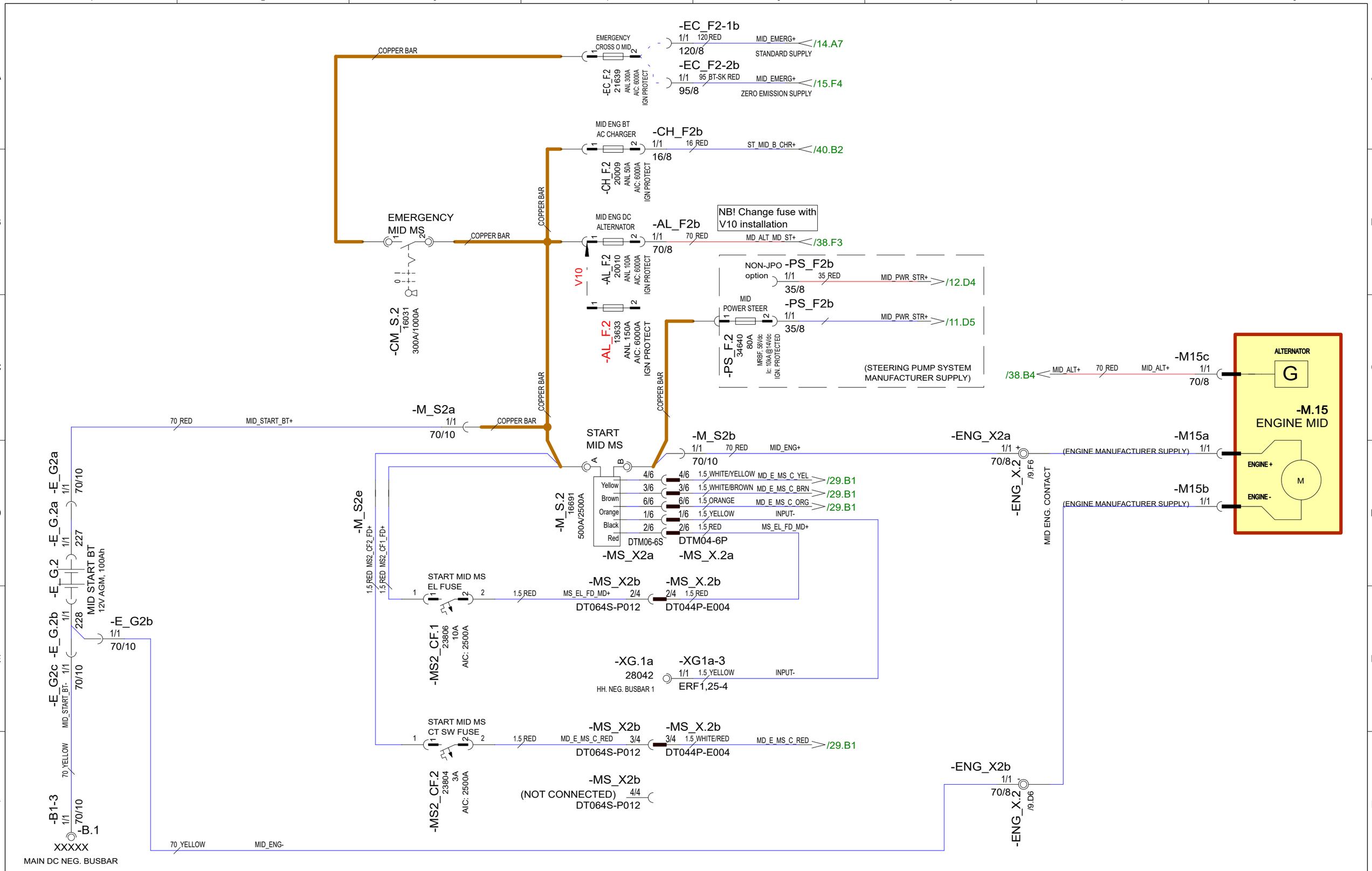

30.10.2023	PF	C3: 2004890; V10 FUSES	Date	30.10.2023	NAVIX	Axopar			
24.3.2023	TuM	A1: 2004274; NOT MODIFIED.	Drawing by	TuM		Boat	Sub-product code	Product code	Project ID
30.3.2023	TuM	B2: 2004274; -XG1a-3, 227 & 228 TO E_G2 ADDED	Sheet rev.	3		45	DC: ENGINE MID - DIAGRAM	HL	9 / 444
Date of modification	Modified by	Description	Project rev.	C	Copyright by	Boat model	Title	Loc	Sheet

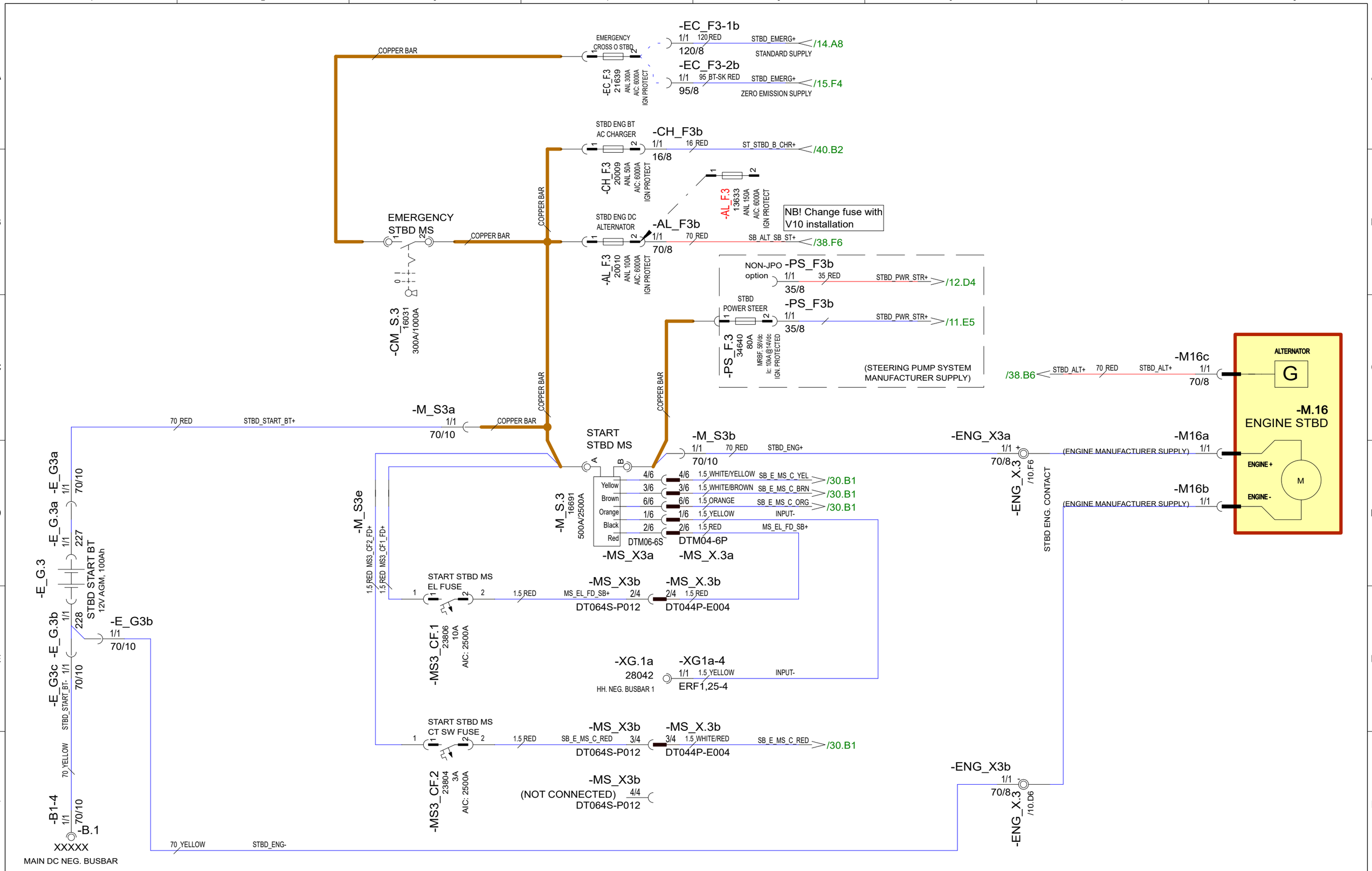

30.10.2023	PF	C3: 2004890; V10 FUSES	Date	30.10.2023	NAVIX	Axopar		
24.3.2023	TuM	A1: 2004274; NOT MODIFIED.	Drawing by	TuM		Boat	Sub-product code	Product code	Project ID
30.3.2023	TuM	B2: 2004274; -XG1a-4, 227 & 228 TO E_G3 ADDED	Sheet rev.	3		45	DC: ENGINE STBD - DIAGRAM	HL	10 / 444
Date of modification	Modified by	Description	Project rev.	C	Copyright by	Boat model	Title	Loc	Sheet

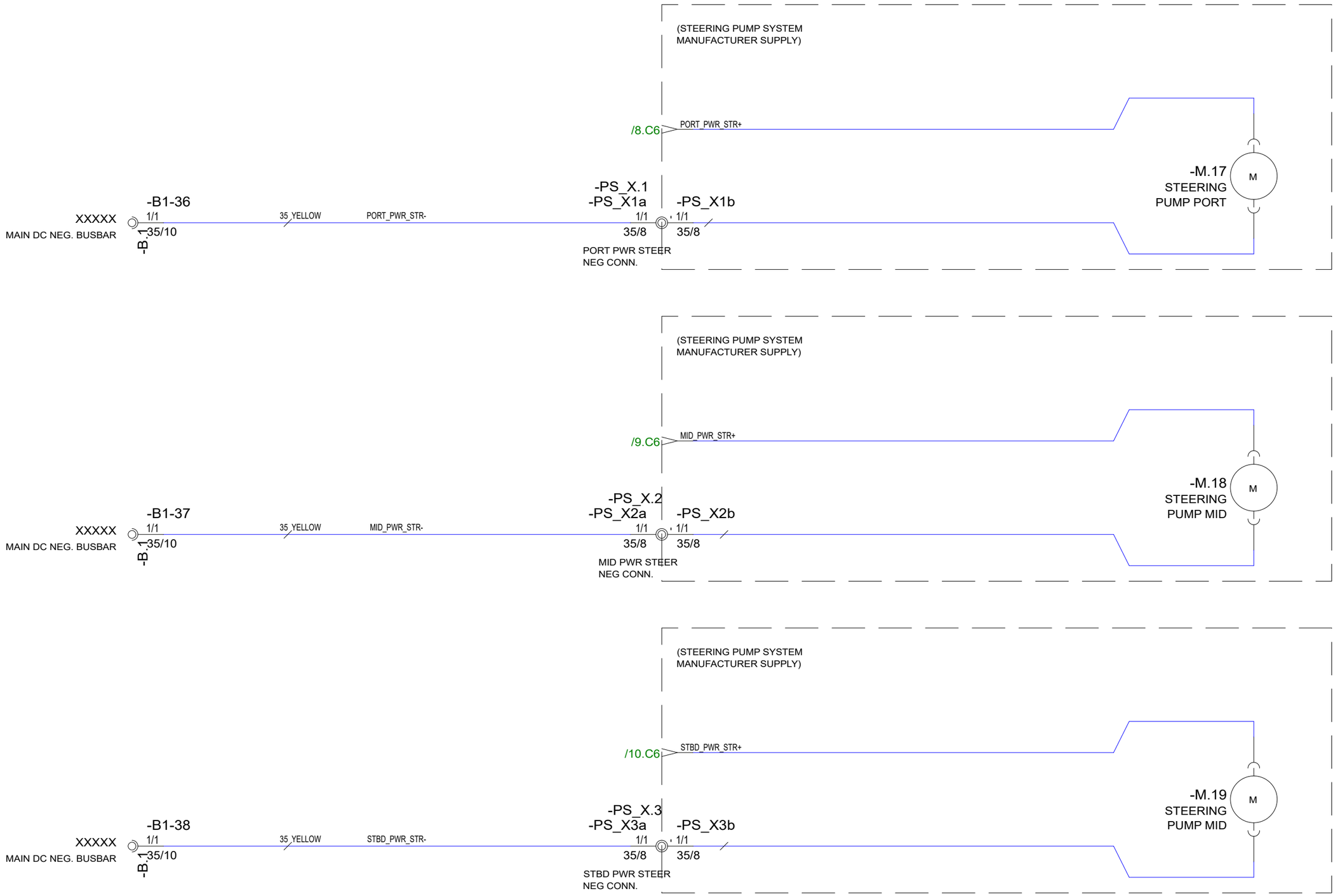

30.10.2023	PF	C3: 2004890; NOT MODIFIED	Date	30.10.2023	NAVIX	Axopar			
24.3.2023	TuM	A1: 2004274; NOT MODIFIED.	Drawing by	TuM					
30.3.2023	TuM	B2: 2004274; NOT MODIFIED.	Sheet rev.	3		45	DC: POWER STEER, JPO - DIAGRAM	HL	11/ 444
Date of modification	Modified by	Description	Project rev.	C	Copyright by	Boat model	Title	Loc	Sheet

Boat	Sub-product code	Product code	Project ID
Axopar			

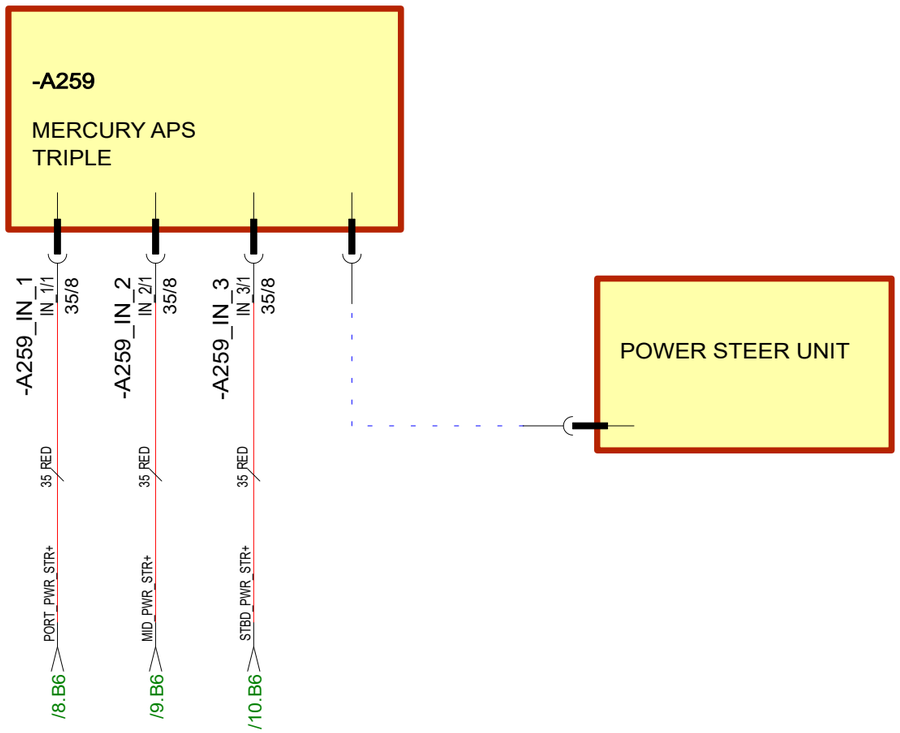

30.10.2023	PF	C3: 2004890; NON-JPO cables added	Date	30.10.2023	NAVIX	Axopar			
24.3.2023	TuM	A1: 2004274; NOT MODIFIED.	Drawing by	TuM		Boat	Sub-product code	Product code	Project ID
30.3.2023	TuM	B2: 2004274; NOT MODIFIED.	Sheet rev.	3		45	DC: POWER STEER. NO JPO - DIAGRAM	HL	12 / 444
Date of modification	Modified by	Description	Project rev.	C	Copyright by	Boat model	Title	Loc	Sheet

NOTE.
TOTAL LENGTHS OF POSITIVE
AND NEGATIVE CABLES MUST BE SAME
IN ALL SERVICE BATTERY SUPPLY CIRCUITS.

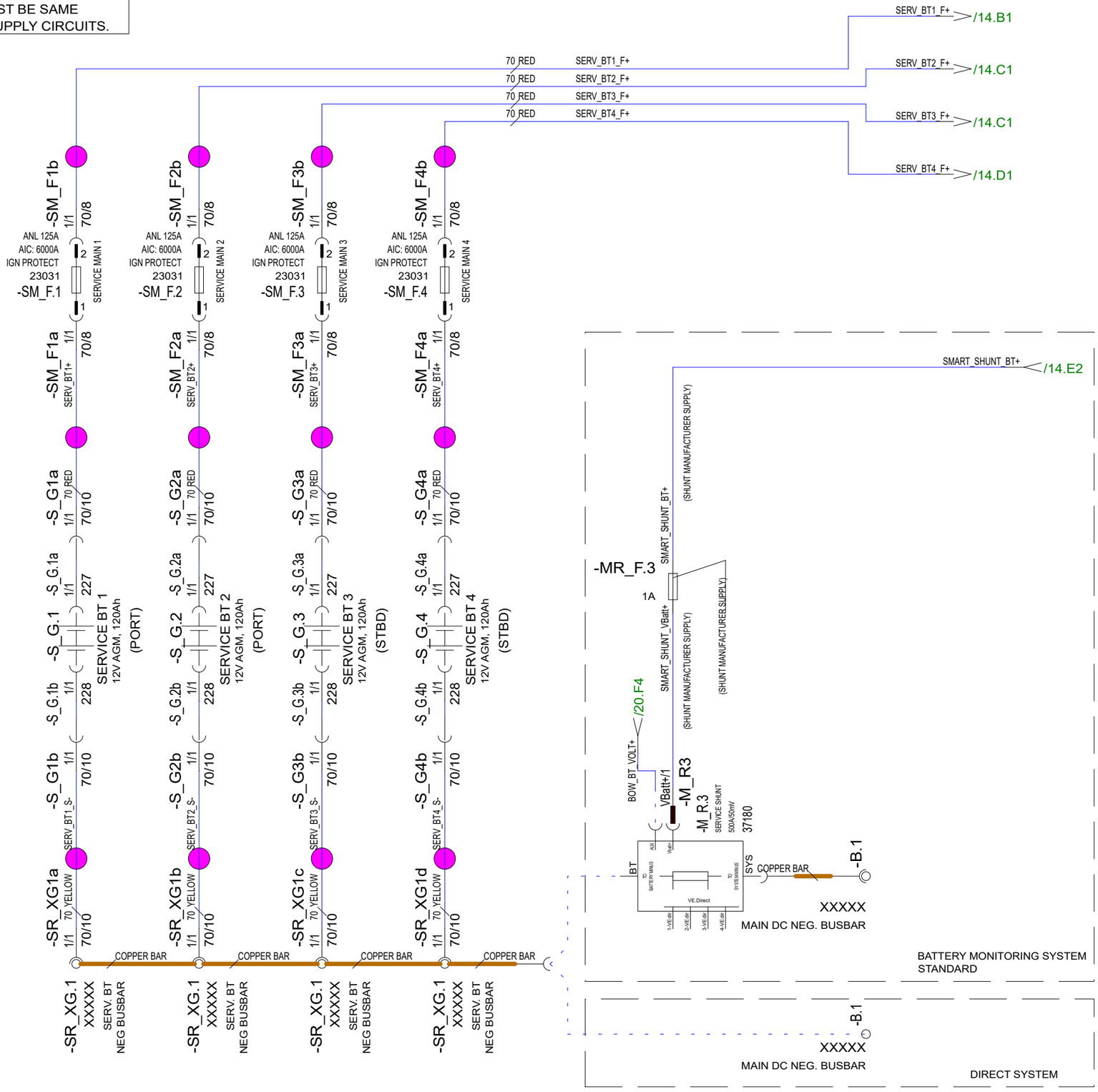

Date of modification	Modified by	Description
30.10.2023	PF	C3: 2004890; NOT MODIFIED
24.3.2023	TuM	A1: 2004274; NOT MODIFIED.
30.3.2023	TuM	B2: 2004274; 227 & 228 ADDED TO S_G1-4.

Date	30.10.2023
Drawing by	TuM
Sheet rev.	3
Project rev.	C

NAVIX
Copyright by

Boat	Sub-product code	Product code	Project ID
Axopar			
Boat model	Title		
45	DC: SERVICE STANDARD BATTERY - DIAGRAM	HL Loc	13 / 444 Sheet

NOTE.
POSITIVE CABLES MUST TO BE SAME LENGTH.

TO GYRO SYSTEM /27.D1 SERV_MS+

-IM_F5a INV/CHR MAIN 1 1/1 120/8
/42.C2 INV/CHR_DC_MS+ 120 RED
-IM_F5 23032 ANL 200A AIC: 6000A IGN PROTECT

-IM_F6a INV/CHR MAIN 2 1/1 120/8
/42.C2 INV/CHR_DC_MS+ 120 RED
-IM_F6 23032 ANL 200A AIC: 6000A IGN PROTECT

-M_S7a /13.A6 SERV_BT1_F+ 1/1 70/8
-SM_F.6 23031 ANL 125A AIC: 6000A IGN PROTECT
SERVICE MSU MAIN 1

-M_S7b /13.A6 SERV_BT2_F+ 1/1 70/8
-SM_F.7 23031 ANL 125A AIC: 6000A IGN PROTECT
SERVICE MSU MAIN 2

-M_S7c /13.A6 SERV_BT3_F+ 1/1 70/8
-SM_F.8 23031 ANL 125A AIC: 6000A IGN PROTECT
SERVICE MSU MAIN 3

-M_S7d /13.B6 SERV_BT4_F+ 1/1 70/8
-SM_F.9 23031 ANL 125A AIC: 6000A IGN PROTECT
SERVICE MSU MAIN 4

-M_S7g /13.C6 SMART_SHUNT_BT+
ZERO EM SYSTEM

COPPER BAR

SERVICE MSU MAIN 5
-SM_F.5 20012 ANL 500A AIC: 6000A IGN PROTECT

-ES_F2-1b 1/1 35/8 35 BT-SK RED
/36.B1 ES MAIN CS+
ESSENTIAL MAIN - CS
ANL 50A AIC: 6000A IGN PROTECT 20009 -ES_F.2-1

-NES_F3-1b 1/1 35/8 35 BT-SK RED
/36.F1 NES MAIN CS+
NON ESS MAIN - CS
ANL 50A AIC: 6000A IGN PROTECT 20009 -NES_F.3-1

-AL_F4-1b 1/1 70/8 70 RED
/38.F2 PT ALT SERV+
PORT ENG DC ALTERNATOR
ANL 100A AIC: 6000A IGN PROTECT 20010 -AL_F.4-1
V10 ANL 150A AIC: 6000A IGN PROTECT 13633 -AL_F.4-1

-AL_F5-1b 1/1 70/8 70 RED
/38.F4 MD ALT SERV+
MID ENG DC ALTERNATOR
ANL 100A AIC: 6000A IGN PROTECT 20010 -AL_F.5-1
V10 ANL 150A AIC: 6000A IGN PROTECT 13633 -AL_F.5-1

-AL_F6-1b 1/1 70/8 70 RED
/38.F6 SB ALT SERV+
STBD ENG DC ALTERNATOR
ANL 100A AIC: 6000A IGN PROTECT 20010 -AL_F.6-1
V10 ANL 150A AIC: 6000A IGN PROTECT 13633 -AL_F.6-1

-EC_F4-1b 1/1 120/8 120 RED
/8.A5 PORT EMERG+
EMERGENCY CROSS O PORT
ANL 300A AIC: 6000A IGN PROTECT 21639 -EC_F.4-1

-EC_F5-1b 1/1 120/8 120 RED
/9.A5 MID EMERG+
EMERGENCY CROSS O MID
ANL 300A AIC: 6000A IGN PROTECT 21639 -EC_F.5-1

-EC_F6-1b 1/1 120/8 120 RED
/10.A5 STBD EMERG+
EMERGENCY CROSS O STBD
ANL 300A AIC: 6000A IGN PROTECT 21639 -EC_F.6-1

NB! Change fuses with V10 installation

RESERVED FOR SOLAR POWER TRICKLE SYSTEM
RESERVED FOR SOLAR POWER HEAVY DUTY SYSTEM

AUDIO_AMP_1_F+ /78.A1 TO AUDIO AMP 1
AUDIO_AMP_1_F+ /78.D1
AUDIO_AMP_2_F+ /79.A1 TO AUDIO AMP 2
AUDIO_AMP_2_F+ /79.E1
(NOT AVAILABLE) TO AUDIO AMP 3
AUDIO_AMP_3_F+ /80.E1

SERVICE MS
-M_S7e
-M_S.7 16691 500A/2500A DTM06-6S
-MS_X5-1a
Yellow 4/6 PP/SR_MS_C_YEL /32.A2
Brown 3/6 PP/SR_MS_C_BRN /32.A2
Orange 6/6 PP/SR_MS_C_ORG /32.B2
Black 1/6 INPUT- /32.B2
Red 2/6 MS_EL_FD_PP/SR+ /32.B2

SERVICE MS EL
MS4_CF1_FD+ 1.5 RED
-MS7_CF.1 23806 10A AIC: 2500A
-MS_X5-1b MS_EL_FD_SERV+ 2/4 DT064S-P012 MS_EL_FD_PP/SR+ /32.C2

SERVICE MS CT SW
MS4_CF2_FD+ 1.5 RED
-MS7_CF.2 23804 3A AIC: 2500A
-MS_X5-1b SERV_MS_C_RED 3/4 DT064S-P012 PP/SR_MS_C_RED /32.E2

-MS_X5-1b (NOT CONNECTED) 4/4 DT064S-P012 (RESERVED FOR ZERO EM. BMS UNIT SUPPLY)

-MS_X5-1c /82.F1 STRG_R_OUTLET+ 1/1 2635110 6 RED
STORAGE ROOM OUTLET
20A AIC: 2500A 23808 -NES_F.6-1
STRG_R_OUTLET_F+ -M_S7h

-ES_F1-1b 1/1 95/8 95 BT-SK RED
ES_MAIN_SW+ /35.B1
ESSENTIAL MAIN - SW
-ES_F.1-1 13633 ANL 150A AIC: 6000A IGN PROTECT

-NES_F1-1b 1/1 95/8 95 BT-SK RED
NES_MAIN_1_SW+ /35.E1
NON ESS MAIN 1 - SW
-NES_F.1-1 13633 ANL 150A AIC: 6000A IGN PROTECT

-NES_F2-1b 1/1 95/8 95 BT-SK RED
NES_MAIN_2_SW+ /36.D1
NON ESS MAIN 2 - SW
-NES_F.2-1 13633 ANL 150A AIC: 6000A IGN PROTECT

SERV_MS_SW+ /23.D1 AFT WINCH SUPPLY

Date of modification	Modified by	Description
30.10.2023	PF	C3: 2004890; V10 FUSES
24.3.2023	TuM	A1: 2004274; NOT MODIFIED.
30.3.2023	TuM	B2: 2004274; NOT MODIFIED.

Date	30.10.2023
Drawing by	TuM
Sheet rev.	3
Project rev.	C

Copyright by NAVIX

Axopar			
Boat	Sub-product code	Product code	Project ID
45	DC: SERVICE STANDARD MAIN SW - DIAGRAM	HL	14 / 444
Boat model	Title	Loc	Sheet

NOTE.
POSITIVE CABLES MUST TO BE SAME LENGTH.

NOTE.
POSITIVE CABLES MUST TO BE SAME LENGTH.

NOTE.
NEGATIVE CABLES MUST TO BE SAME LENGTH.

-ES_G1a 1/1 95/10
-ES_G.1a +/1 227
-ES_G.1 227
-ES_G.1b -/1 228
ESSENTIAL SERVICE BT 1
12V AGM, 120Ah
-ES_G1b 1/1 95/10
ESS_SRV_BT1_S-

-ES_G2a 1/1 95/10
-ES_G.2a +/1 227
-ES_G.2 227
-ES_G.2b -/1 228
ESSENTIAL SERVICE BT 2
12V AGM, 120Ah
-ES_G2b 1/1 95/10
ESS_SRV_BT2_S-

-M_R2a BT-/1 95 YELLOW 95/10
-M_R2b BT-/1 95 YELLOW 95/10

95 BT-SK RED ESS_SRV_BT1+
95 BT-SK RED ESS_SRV_BT2+

-ESM_F1a 1/1 95/8
-ESM_F.1 13633 ANL 150A AIC: 6000A IGN PROTECT
ESS SERVICE MAIN 1

-ESM_F2a 1/1 95/8
-ESM_F.2 13633 ANL 150A AIC: 6000A IGN PROTECT
ESS SERVICE MAIN 2

COPPER BAR

/39.A2 DC-DC_M1_IN+ 50 RED
-DDM_F1b 1/1 50/8
DC/DC CHARGER MAIN 1
ANL 100A AIC: 6000A IGN PROTECT 20010 -DDM_F.1

/39.A4 DC-DC_M2_IN+ 50 RED
-DDM_F2b 1/1 50/8
DC/DC CHARGER MAIN 2
ANL 100A AIC: 6000A IGN PROTECT 20010 -DDM_F.2

/39.A7 DC-DC_M3_IN+ 50 RED
-DDM_F3b 1/1 50/8
DC/DC CHARGER MAIN 3
ANL 100A AIC: 6000A IGN PROTECT 20010 -DDM_F.3

RESERVED FOR SOLAR POWER TRICKLE SYSTEM
RESERVED FOR SOLAR POWER HEAVY DUTY SYSTEM

BATTERY MONITORING SYSTEM
-M_S4g
(SHUNT MANUFACTURER SUPPLY)
SMART_SHUNT_BT+
SMART_SHUNT_VBatt+
(SHUNT MANUFACTURER SUPPLY)

-MR_F.1
1A

SHUNT SHUNT
BT
TO BATTERY MINUS
AUX
Vbatt+
1-VEdir
2-VEdir
3-VEdir
4-VEdir
VE.Direct
TO SYSTEM MINUS
SYS

BOW_BT_VOLT+ /20.F4
VBatt+/1
(SHUNT MANUFACTURER SUPPLY)
-M_R2ct
-M_R.2
ES SERVICE SHUNT
500A/50mV
37180

NOTE.
KEEP AS SHORT AS POSSIBLE.
DO NOT BUNDLE WITH OTHER WIRES.

-B.1 XXXXX MAIN DC NEG. BUSBAR
-B.1 XXXXX MAIN DC NEG. BUSBAR
DIRECT SYSTEM

-M_R2c SYS-/1 120/10
120 YELLOW ESS_SERV_BT-
-B1-5 1/1 120/10
-B.1 XXXXX MAIN DC NEG. BUSBAR

EMERGENCY CROSS O PORT
-EC_F.4-2 21639 ANL 300A AIC: 6000A IGN PROTECT
-EC_F4-2b 1/1 95/8
95 BT-SK RED PORT_EMERG+ /8.A5

EMERGENCY CROSS O MID
-EC_F.5-2 21639 ANL 300A AIC: 6000A IGN PROTECT
-EC_F5-2b 1/1 95/8
95 BT-SK RED MID_EMERG+ /9.A5

EMERGENCY CROSS O STBD
-EC_F.6-2 21639 ANL 300A AIC: 6000A IGN PROTECT
-EC_F6-2b 1/1 95/8
95 BT-SK RED STBD_EMERG+ /10.A5

SERVICE AC CHARGER
-CH_F4b 1/1 16/8
16 RED SERV_B_CHR+ /41.A2
-CH_F.4 20009 ANL 50A AIC: 6000A IGN PROTECT

ESSENTIAL MAIN - CS
-ES_F2-2b 1/1 35/8
35 BT-SK RED ES_MAIN_CS+ /36.A1
-ES_F.2-2 20009 ANL 50A AIC: 6000A IGN PROTECT

PORT ENG DC ALTERNATOR
-AL_F4-2b 1/1 70/8
70 RED PT_ALT_SERV+ /38.F2
V10
-AL_F.4-2 13633 ANL 150A AIC: 6000A IGN PROTECT
-AL_F4-2 20010 ANL 100A AIC: 6000A IGN PROTECT

NB! Change fuses with V10 installation

MID ENG DC ALTERNATOR
-AL_F5-2b 1/1 70/8
70 RED MD_ALT_SERV+ /38.F4
V10
-AL_F.5-2 13633 ANL 150A AIC: 6000A IGN PROTECT
-AL_F5-2 20010 ANL 100A AIC: 6000A IGN PROTECT

STBD ENG DC ALTERNATOR
-AL_F6-2b 1/1 70/8
70 RED SB_ALT_SERV+ /38.F6
V10
-AL_F.6-2 13633 ANL 150A AIC: 6000A IGN PROTECT
-AL_F6-2 20010 ANL 100A AIC: 6000A IGN PROTECT

ESSENTIAL MAIN - SW
-ES_F1-2b 1/1 95/8
95 BT-SK RED ES_MAIN_SW+ /35.B1
-ES_F.1-2 13633 150A AIC: 6000A IGN PROTECT

ESSENTIAL SERVICE MS
-MS_X.4a
-M_S.4 16691 500A/2500A
Yellow 4/6 4/6 1.5 WHITE/YELLOW SERV_MS_C_YEL /31.B1
Brown 3/6 3/6 1.5 WHITE/BROWN SERV_MS_C_BRN /31.B1
Orange 6/6 6/6 1.5 ORANGE SERV_MS_C_ORG /31.B1
Black 1/6 1/6 1.5 YELLOW
Red 2/6 2/6 1.5 RED MS_EL_FD_SERV+
DTM06-6S DTM04-6P
-MS_X4a

-M_S4e
1.5 RED MS4_CF2_FD+
1.5 RED MS4_CF1_FD+

ESS SERVICE MS EL
-MS4_CF.1 23806 10A AIC: 2500A
1.5 RED MS_EL_FD_SERV+ 2/4
-MS_X4b DT064S-P012
2/4 1.5 RED
-MS_X.4b DT044P-E004

-XG.1a 28042 HH. NEG. BUSBAR 1
1/1 1.5 YELLOW INPUT-
-XG1a-6 ERF1,25-4

ESS SERVICE MS CT SW
-MS4_CF.2 23804 3A AIC: 2500A
1.5 RED SERV_MS_C_RED 3/4
-MS_X4b DT064S-P012
3/4 1.5 WHITE/RED SERV_MS_C_RED /31.B1
-MS_X.4b DT044P-E004

-MS_X4b (NOT CONNECTED) 4/4 DT064S-P012

Date of modification	Modified by	Description
29.5.2024	PF/TuM	C3: 2004890; V10 FUSES; 2004998; BMS SYSTEM UPDATE.
24.3.2023	TuM	A1: 2004274; NOT MODIFIED.
30.3.2023	TuM	B2: 2004274; XG1a-6, 227 & 228 TO ES_G1-2 ADDED.

Date	30.10.2023
Drawing by	TuM
Sheet rev.	3
Project rev.	C

NAVIX
Copyright by

Axopar			
Boat	Sub-product code	Product code	Project ID
45	DC: SERVICE ZERO EMISSION - DIAGRAM	HL	
Boat model	Title	Loc	15 / 444 Sheet

NOTE.
POSITIVE CABLES MUST TO BE SAME LENGTH.

NOTE.
NEGATIVE CABLES MUST TO BE SAME LENGTH.

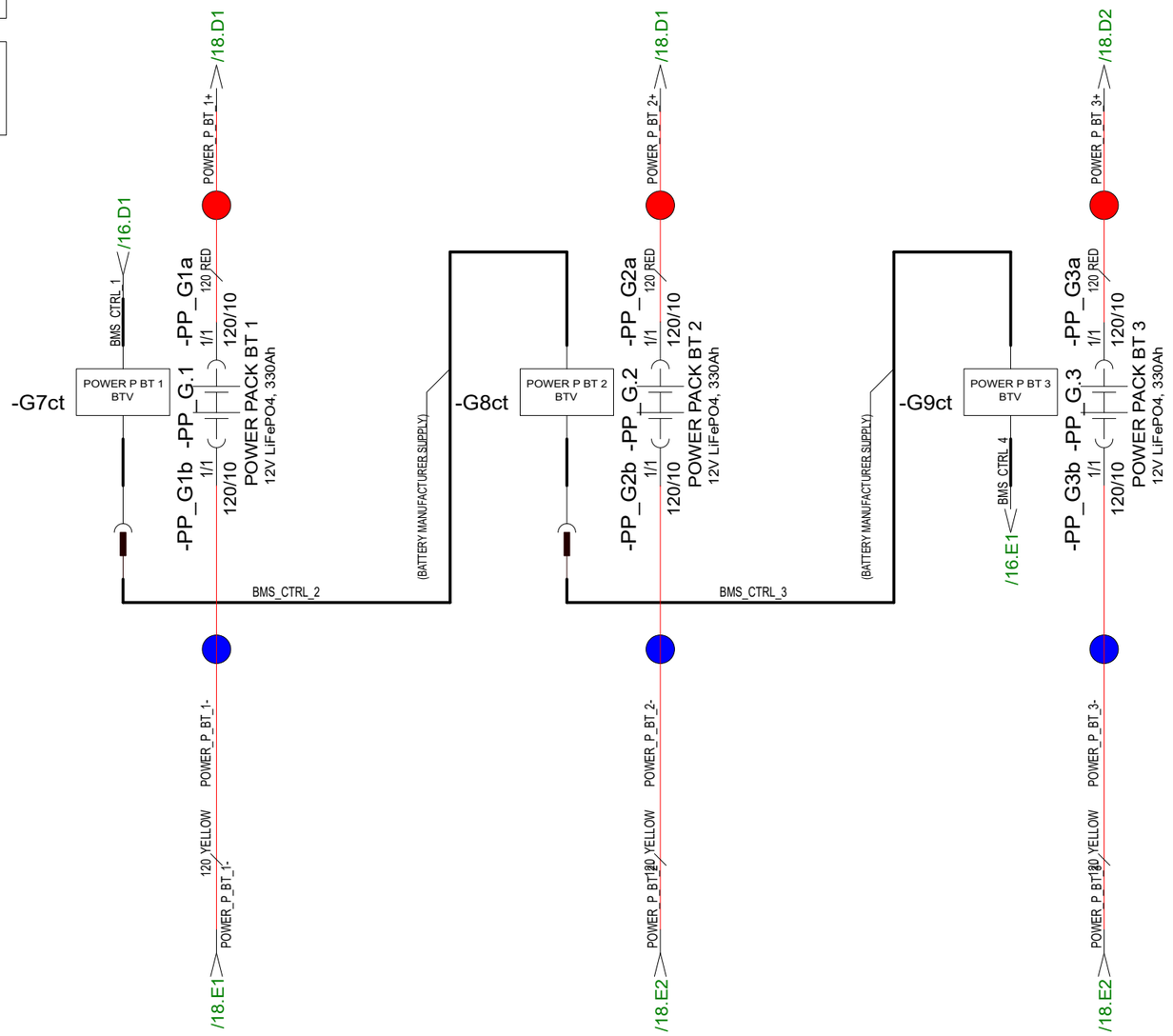

Date of modification	Modified by	Description						
26.4.2024	TuM	C3: 2004998; BMS SYSTEM UPDATE, 1000A SHUNT (M_R1) REMOVED.	Date	30.10.2023	Copyright by	Axopar		
24.3.2023	TuM	A1: 2004274; NOT MODIFIED.	Drawing by	TuM		Boat	Sub-product code	Product code / Project ID
30.3.2023	TuM	B2: 2004274; NOT MODIFIED.	Sheet rev.	3		45	DC: POWER PACK BATTERY - DIAGRAM	HL / Loc
			Project rev.	C		Boat model	Title	16 / 444 Sheet

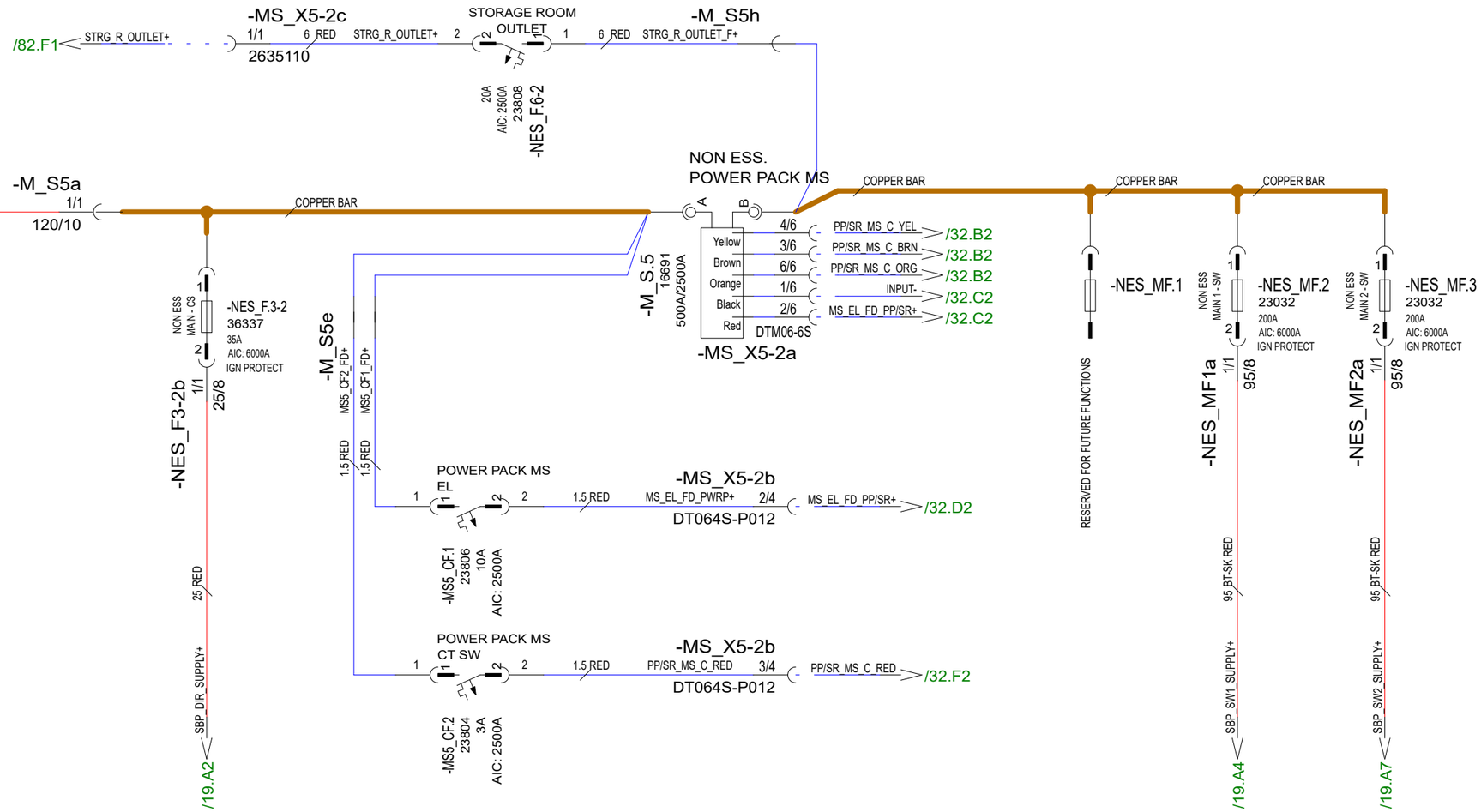

26.4.2024	PF/TuM	C3: 2004998; BMS SYSTEM UPDATED, GM_S.1, HEAVY DT SOLAR REMOVED	Date	30.10.2023	NAVIX	Axopar			
24.3.2023	TuM	A1: 2004274; NOT MODIFIED.	Drawing by	TuM		Boat	Sub-product code	Product code	Project ID
30.3.2023	TuM	B2: 2004274; NOT MODIFIED.	Sheet rev.	3		45	DC: POWER PACK - DIAGRAM	HL	17 / 444
Date of modification	Modified by	Description	Project rev.	C	Copyright by	Boat model	Title	Loc	Sheet

NOTE.
POSITIVE CABLES MUST TO BE SAME LENGTH.

NOTE.
POSITIVE CABLES MUST TO BE SAME LENGTH.

-LX_A.1
Victron Lynx
Class-T Power In 1000

-LX_A.2
Victron Lynx
Class-T Power In 1000

-LX_A.3
Victron Lynx
Smart BMS 1000 (M10)

-LX_A.4
Victron Lynx
Distributor 1000 (M10)

-LX_A.5
Victron Lynx
Distributor 1000 (M10)

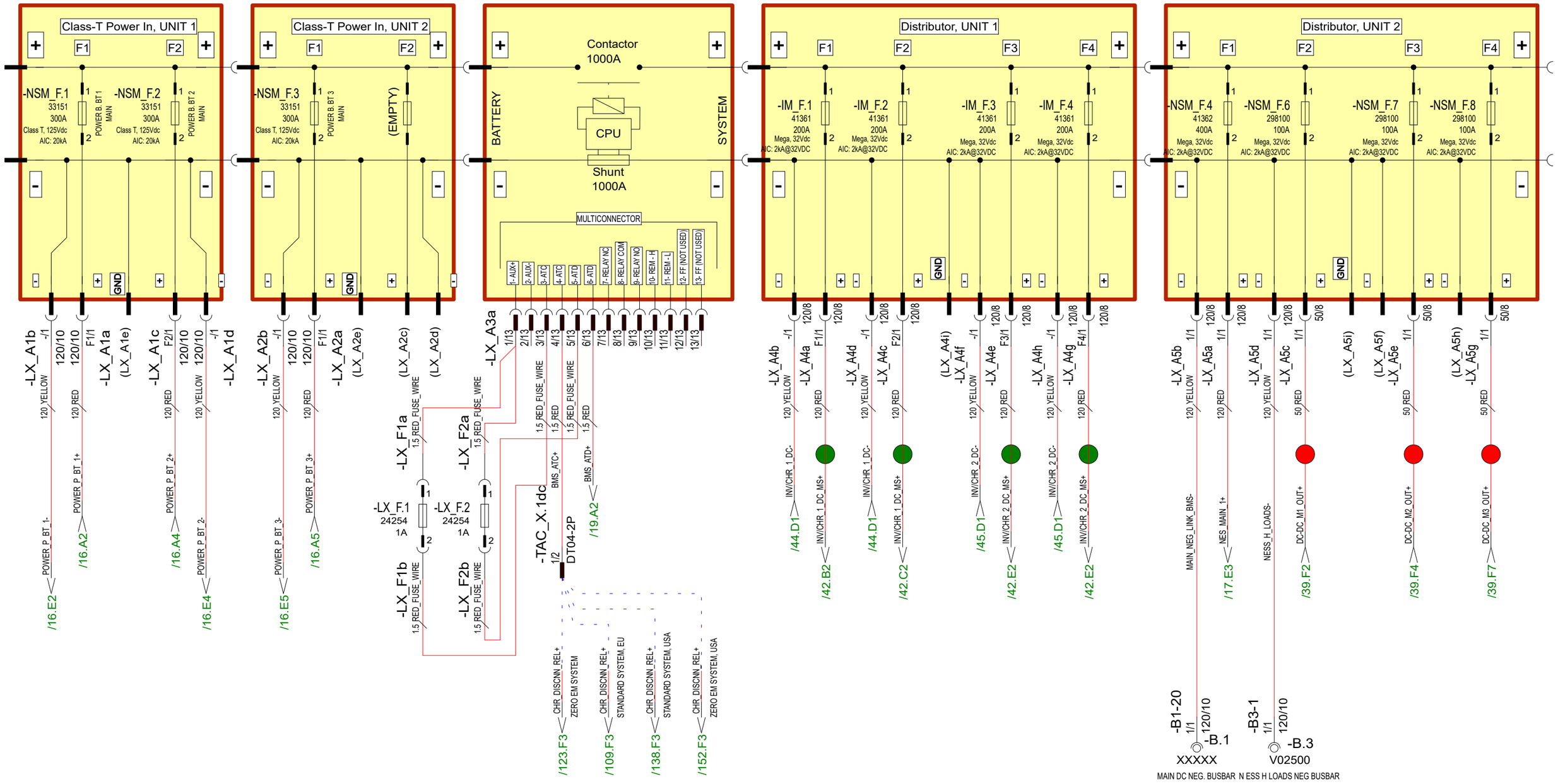

26.4.2024	TuM	C3: 2004998; BMS SYSTEM UPDATE, LYNX SYSTEM ADDED.	Date	26.4.2024	NAVIX	Axopar			
			Drawing by	TuM					
			Sheet rev.	3					
Date of modification	Modified by	Description	Project rev.	C	Copyright by	Boat	Sub-product code	Product code	Project ID
						45	DC: POWER PACK	HL	18 / 444
						Boat model	BMS/ DISTRIBUTION - DIAGRAM	Loc	Sheet
							Title		

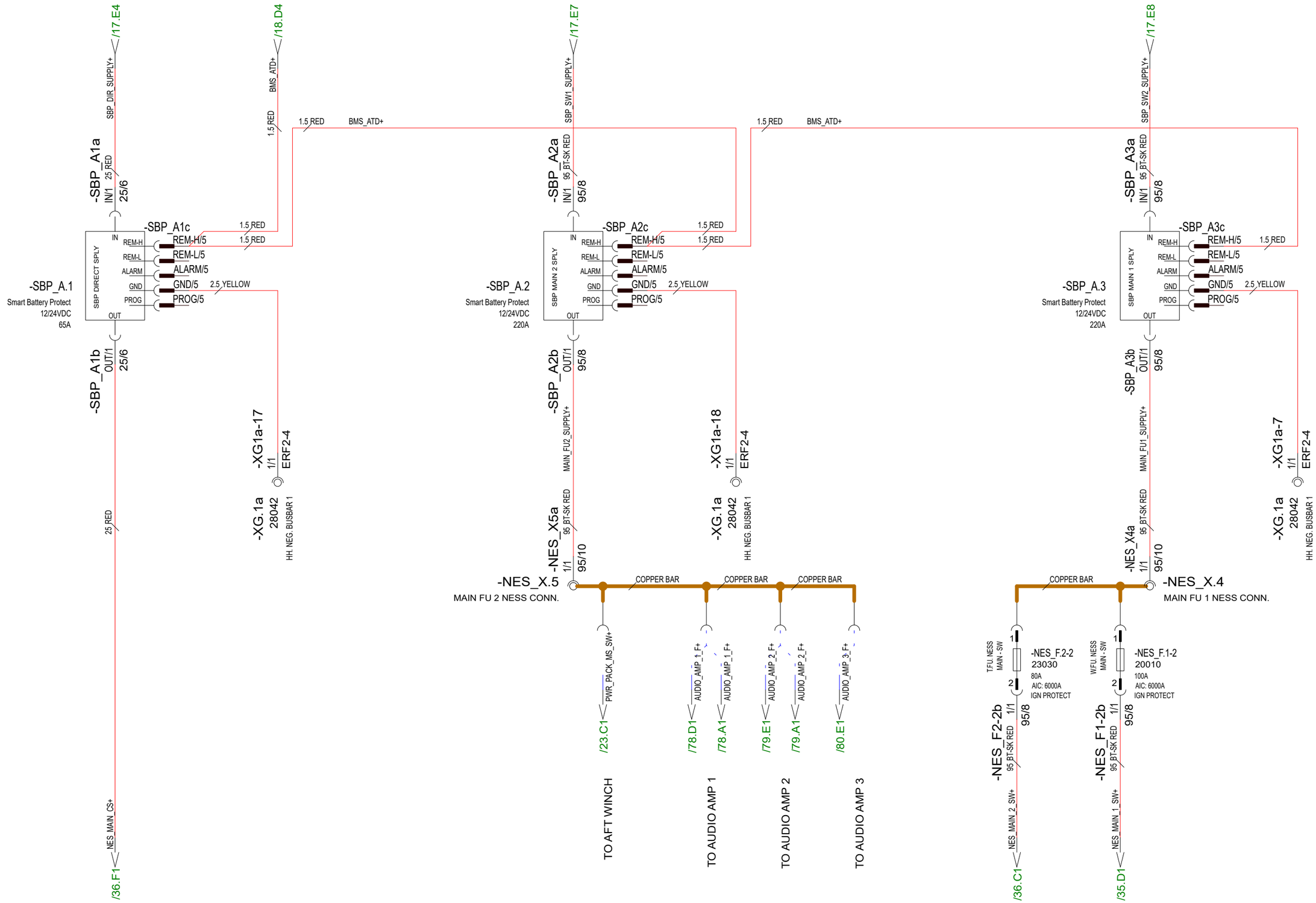

26.4.2024	TuM	C3: 2004998; BMS SYSTEM UPDATE, SBP SYSTEM ADDED.	Date	26.4.2024	NAVIX	Axopar			
			Drawing by	TuM		Boat	Sub-product code	Product code	Project ID
			Sheet rev.	3		45	DC: POWER PACK BATTERY PROTECTION - DIAGRAM		
Date of modification	Modified by	Description	Project rev.	C	Copyright by	Boat model	Title	Loc	Sheet
								HL	19 / 444

NOTE.
POSITIVE CABLES MUST TO BE SAME LENGTH.

NOTE.
POSITIVE CABLES MUST TO BE SAME LENGTH.

NOTE.
NEGATIVE CABLES MUST TO BE SAME LENGTH.

NB! Change fuses with V10 installation

-CH_F5b
H AUX BOW AC CHARGER
/41.B2 H_AUX_B_CHR+ 16 RED 1/1 16/8
ANL 50A AIC: 6000A IGN PROTECT 20009 -CH_F.5

-AL_F7b
PORT ENG DC ALTERNATOR
/38.F2 PT_ALT_H_AUX+ 70 RED 1/1 70/8
V10
ANL 100A AIC: 6000A IGN PROTECT 20010 -AL_F.7
ANL 150A AIC: 6000A IGN PROTECT 13633 -AL_F.7

-AL_F8b
MID ENG DC ALTERNATOR
/38.F5 MD_ALT_H_AUX+ 70 RED 1/1 70/8
V10
ANL 100A AIC: 6000A IGN PROTECT 20010 -AL_F.8
ANL 150A AIC: 6000A IGN PROTECT 13633 -AL_F.8

-AL_F9b
STBD ENG DC ALTERNATOR
/38.F7 SB_ALT_H_AUX+ 70 RED 1/1 70/8
V10
ANL 100A AIC: 6000A IGN PROTECT 20010 -AL_F.9
ANL 150A AIC: 6000A IGN PROTECT 13633 -AL_F.9

COPPER BAR

-BHA_F1a 1/1 120/8
-BHA_F1.1 23032 200A AIC: 6000A IGN PROTECT
-BHA_F1b 1/1 120/8
-M_S6a 1/1 120/10
120 RED BOW_HA_BT+
120 RED BOW_HA_BT+
BOW HEAVY AUX MAIN 1
BOW_HA_MS+

-BHA_F2a 1/1 120/8
-BHA_F.2 23032 200A AIC: 6000A IGN PROTECT
-BHA_F2b 1/1 120/8
-M_S6b 1/1 120/10
BOW HEAVY AUX MAIN 2
BOW_HA_MS+

-M_S6g
2.5 RED BOW_BT_VOLT_F+

-BHA_G1a 1/1 120/10
-BHA_G1b 1/1 120/10
-BHA_G.1a 1/1 227
-BHA_G.1 HEAVY AUX BOW BT 12V AGM, 120Ah
-BHA_G.1c 1/1 228
-BHA_G1c 1/1 120/10 BOW_HA_BT- 120 YELLOW
-BHA_G1d 1/1 120/10 BOW_HA_BT- 120 YELLOW

-B2-3 1/1 120/10 V02500 BOW DC NEG. BUSBAR -B.2
-B2-2 1/1 120/10 V02500 BOW DC NEG. BUSBAR -B.2

BOW BT VOLTAGE SENSE
-MS6_CF.3 23804 3A AIC: 2500A
-MS_X6c 1/3 2635310 2.5 RED
-MS_X.6c 1/3 2634310 2.5 RED

-M_RX1 BOW_BT_VOLT+ AUX/1
BOW_BT_VOLT+ /13.E4 BATTERY MONITORING SYSTEM STANDARD
BOW_BT_VOLT+ /15.E2 BATTERY MONITORING SYSTEM ZERO EMISSION

-W_F3b
BOW WINCH FOLDING ARM
1/1 25 RED BOW_W_ARM_F+ /25.A1 25/8
-W_F3 21614 60A AIC: 6000A IGN PROTECT

-W_F2b
BOW WINCH
1/1 70 RED BOW_WINCH_F+ /24.F1 70/8
-W_F.2 13633 150A AIC: 6000A IGN PROTECT

-BTH_F1b
BOW THRUSTER MAIN 1
1/1 95 RED BOW_TH_1+ /26.E1 95/8
-BTH_F.1 36353 175A AIC: 6000A IGN PROTECT

-BTH_F2b
BOW THRUSTER MAIN 2
1/1 95 RED BOW_TH_2+ /26.F1 95/8
-BTH_F.2 36353 175A AIC: 6000A IGN PROTECT

-M_S6h 4 RED BOW_CTRL_F+
-MS6_CF4a LINE/1 RSB8152
BOW WINCH/ THRUSTER CTRL
-MS6_CF4b LOAD/1 4 RED 2/3
-MS_X6c 2/3 -MS_X.6c 2/3 BOW_CTRL+ /25.F
-MS6_CF4c 1/1
-MS_X6c 2.5 RED 3/3 -MS_X.6c 3/3 BOW_CTRL+ /26.C
-MS6_CF.4 23807 15A AIC: 2500A

HEAVY AUX BOW MS
-M_S6e
1.5 RED MS6_CF2_FD+
1.5 RED MS6_CF1_FD+

-M_S.6 16691 500A/2500A
DTM06-6S -MS_X6a
DTM04-6P -MS_X.6a

Yellow	4/6	4/6	1.5 WHITE/YELLOW	HA_B_MS_C_YEL	/33.B1
Brown	3/6	3/6	1.5 WHITE/BROWN	HA_B_MS_C_BRN	/33.B1
Orange	6/6	6/6	1.5 ORANGE	HA_B_MS_C_ORG	/33.B1
Black	1/6	1/6	1.5 YELLOW	INPUT-	
Red	2/6	2/6	1.5 RED	MS_EL_FD_HA_B+	

H AUX BOW MS EL
1.5 RED MS_EL_FD_HA_B+ 2/4 -MS_X6b DT064S-P012
2/4 1.5 RED -MS_X.6b DT044P-E004
-MS6_CF.1 23806 10A AIC: 2500A

-B.2 V02500 BOW DC NEG. BUSBAR
-B2-9 1/1 1.5 YELLOW INPUT- PR6

H AUX BOW MS CT SW
1.5 RED HA_B_MS_C_RED 3/4 -MS_X6b DT064S-P012
3/4 1.5 WHITE/RED HA_B_MS_C_RED /33.B1 -MS_X.6b DT044P-E004
-MS6_CF.2 23804 3A AIC: 2500A

-MS_X6b (NOT CONNECTED) 4/4 DT064S-P012

30.10.2023	PF	C3: 2004890; V10 FUSES	Date	30.10.2023	NAVIX	Axopar			
24.3.2023	TuM	A1: 2004274; NOT MODIFIED.	Drawing by	TuM		Boat	Sub-product code	Product code	Project ID
30.3.2023	TuM	B2: 2004274; -B2-9, 227 & 228 TO BHA_G1 ADDED.	Sheet rev.	3		45	DC: HEAVY AUX BOW - DIAGRAM	HL	20 / 444
Date of modification	Modified by	Description	Project rev.	C	Copyright by	Boat model	Title	Loc	Sheet

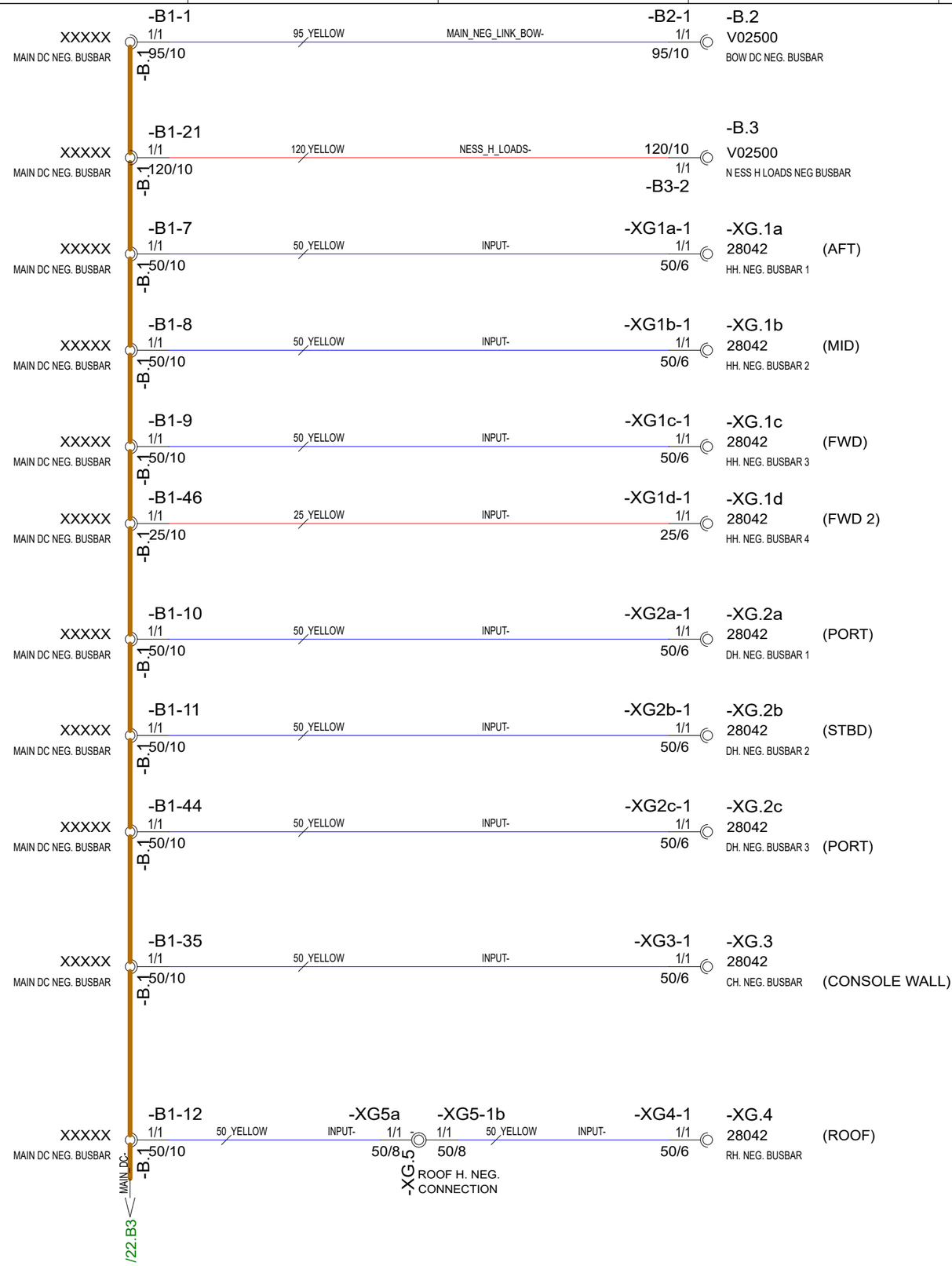

7.6.2024	TuM	C3: 2005065; B3 & XG1d ADDED,	Date	30.10.2023	NAVIX	Axopar		
24.3.2023	TuM	A1: 2004274; NOT MODIFIED.	Drawing by	TuM		Boat	Sub-product code	Product code / Project ID
22.4.2023	TuM	B2: 2004274; HARNESS NEG BUSBARS RE-ARRANGED.	Sheet rev.	3		45	DC: HARNESS NEGATIVE - DIAGRAM	HL
Date of modification	Modified by	Description	Project rev.	C	Copyright by	Boat model	Title	Loc / Sheet: 21/ 444

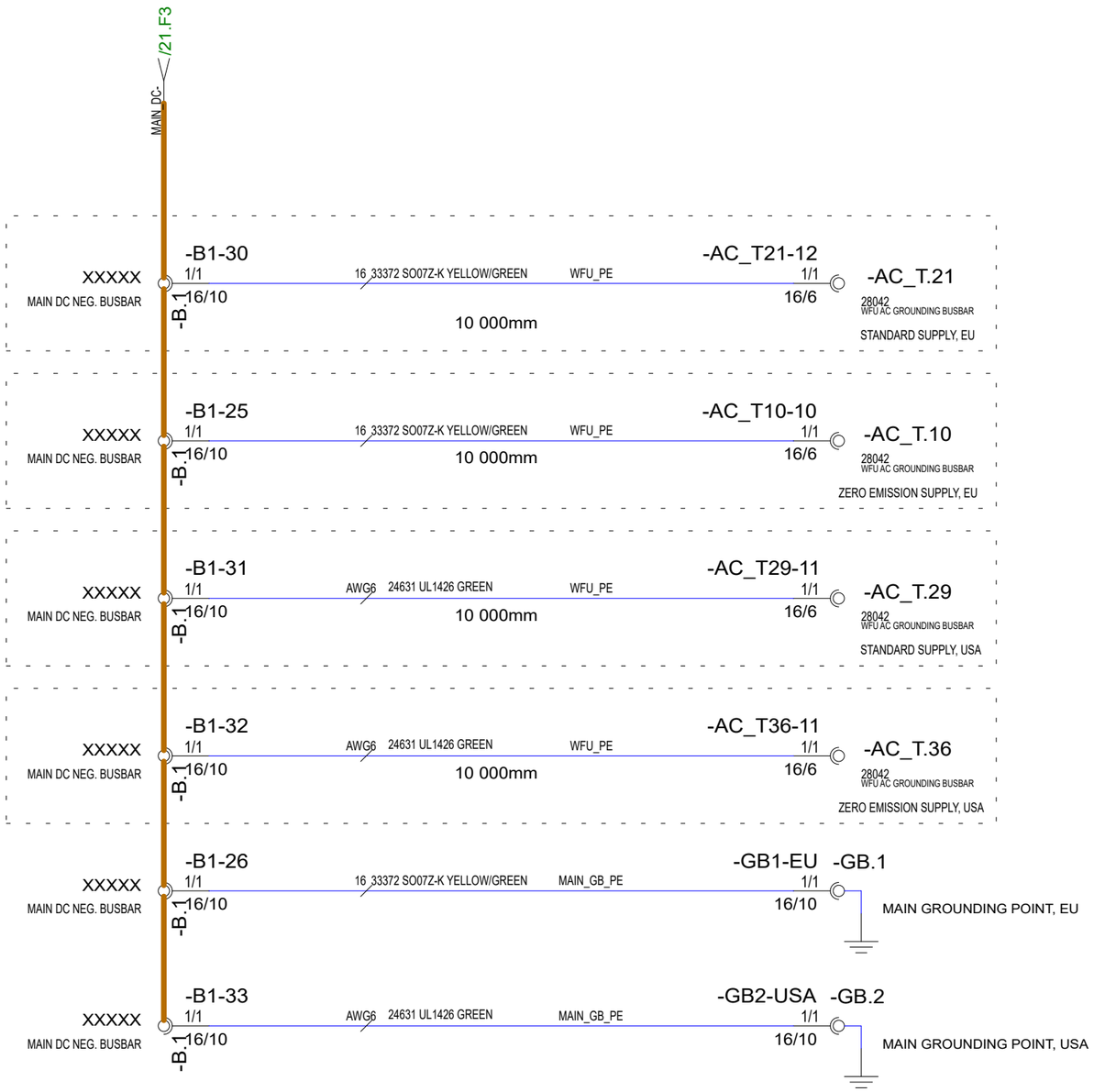

30.10.2023	PF	C3: 2004890; NOT MODIFIED	Date	30.10.2023		Axopar		
24.3.2023	TuM	A1: 2004274; NOT MODIFIED.	Drawing by	TuM		Boat	Sub-product code	Product code / Project ID
30.3.2023	TuM	B2: 2004274; HARNESS NEG BUSBARS RE-ARRANGED.	Sheet rev.	3	NAVIX	45	DC: MAIN NEGATIVE POINT - DIAGRAM	HL
Date of modification	Modified by	Description	Project rev.	C	Copyright by	Boat model	Title	Loc / 22 / 444 Sheet

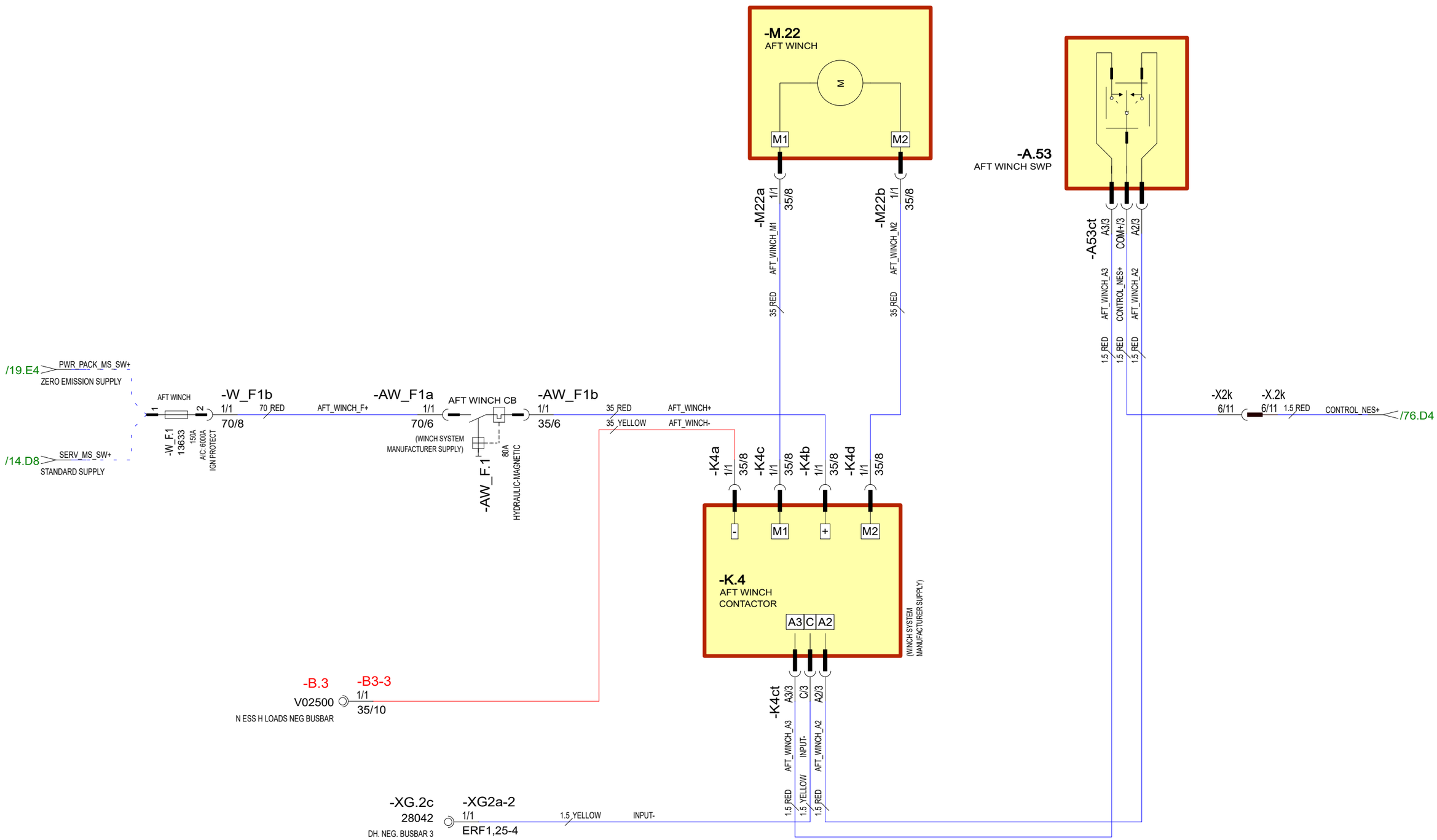

Date of modification	Modified by	Description
26.4.2024	TuM	C3: 2004998; BMS UPDATE, WINCH NEG B1 -> B3.
24.3.2023	TuM	A1: 2004274; NOT MODIFIED.
30.3.2023	TuM	B2: 2004274; -XG2a-2 ADDED.

Date	30.10.2023
Drawing by	TuM
Sheet rev.	3
Project rev.	C

Copyright by

NAVIX

Axopar			
Boat	Sub-product code	Product code	Project ID
45	DC: AFT WINCH - DIAGRAM	HL	
Boat model	Title	Loc	23 / 444 Sheet

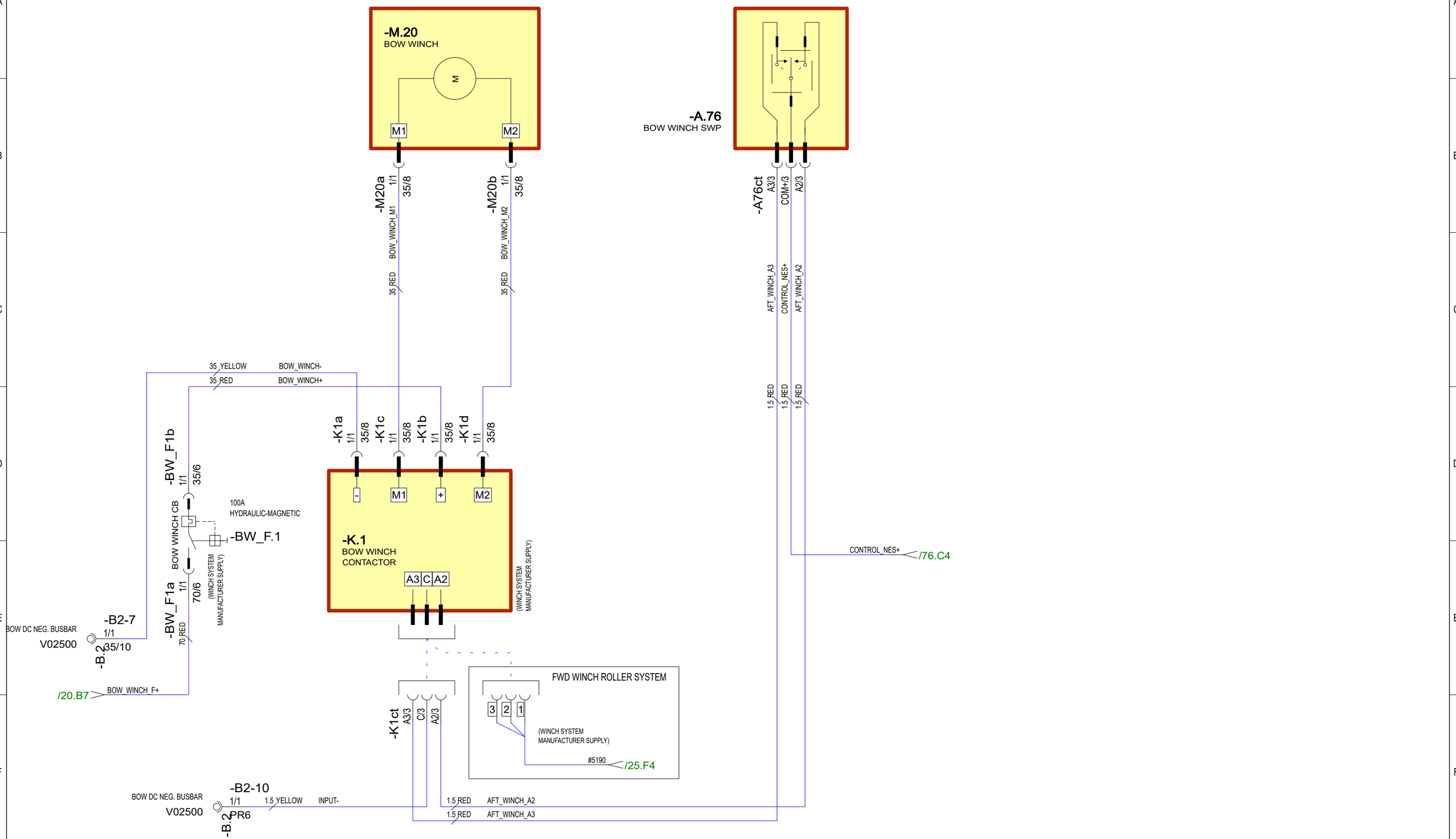

30.10.2023	PF	C3: 2004890; NOT MODIFIED	Date	30.10.2023	NAVIX	Axopar			
24.3.2023	TuM	A1: 2004274; NOT MODIFIED.	Drawing by	TuM		Boat	Sub-product code	Product code	Project ID
30.3.2023	TuM	B2: 2004274; -B2-10 ADDED.	Sheet rev.	3		45	DC: FORE WINCH - DIAGRAM	HL	24 / 444
Date of modification	Modified by	Description	Project rev.	C	Copyright by	Boat model	Title	Loc	Sheet

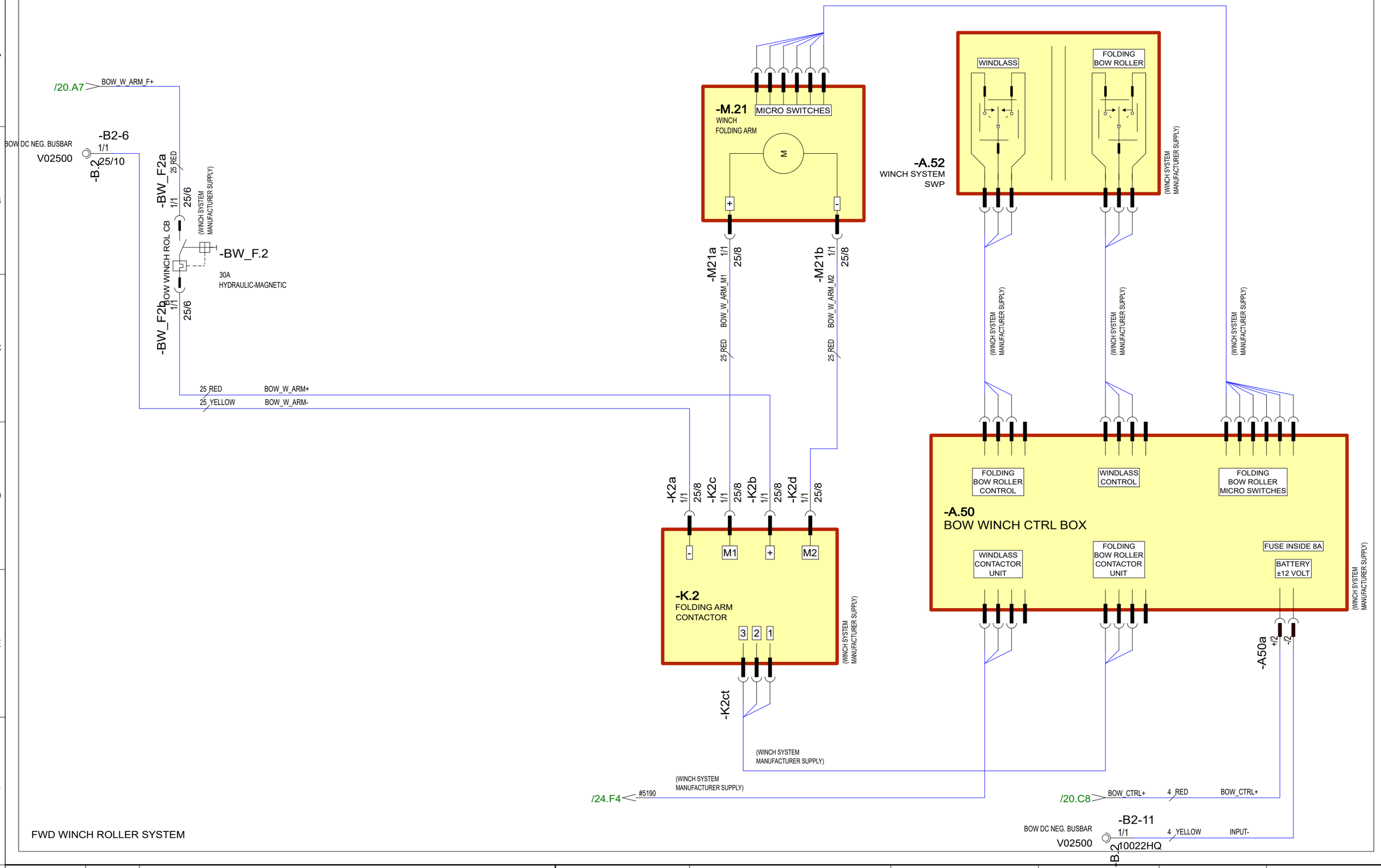

FWD WINCH ROLLER SYSTEM

Date of modification	Modified by	Description
30.10.2023	PF	C3: 2004890; NOT MODIFIED
24.3.2023	TuM	A1: 2004274; NOT MODIFIED.
30.3.2023	TuM	B2: 2004274; -B2-11 ADDED.

Date	30.10.2023
Drawing by	TuM
Sheet rev.	3
Project rev.	C

NAVIX
Copyright by

Boat	Sub-product code	Product code	Project ID
Axopar			
Boat model	Title	Loc	Sheet
45	DC: FORE WINCH BOW ROLLER - DIAGRAM	HL	25 / 444

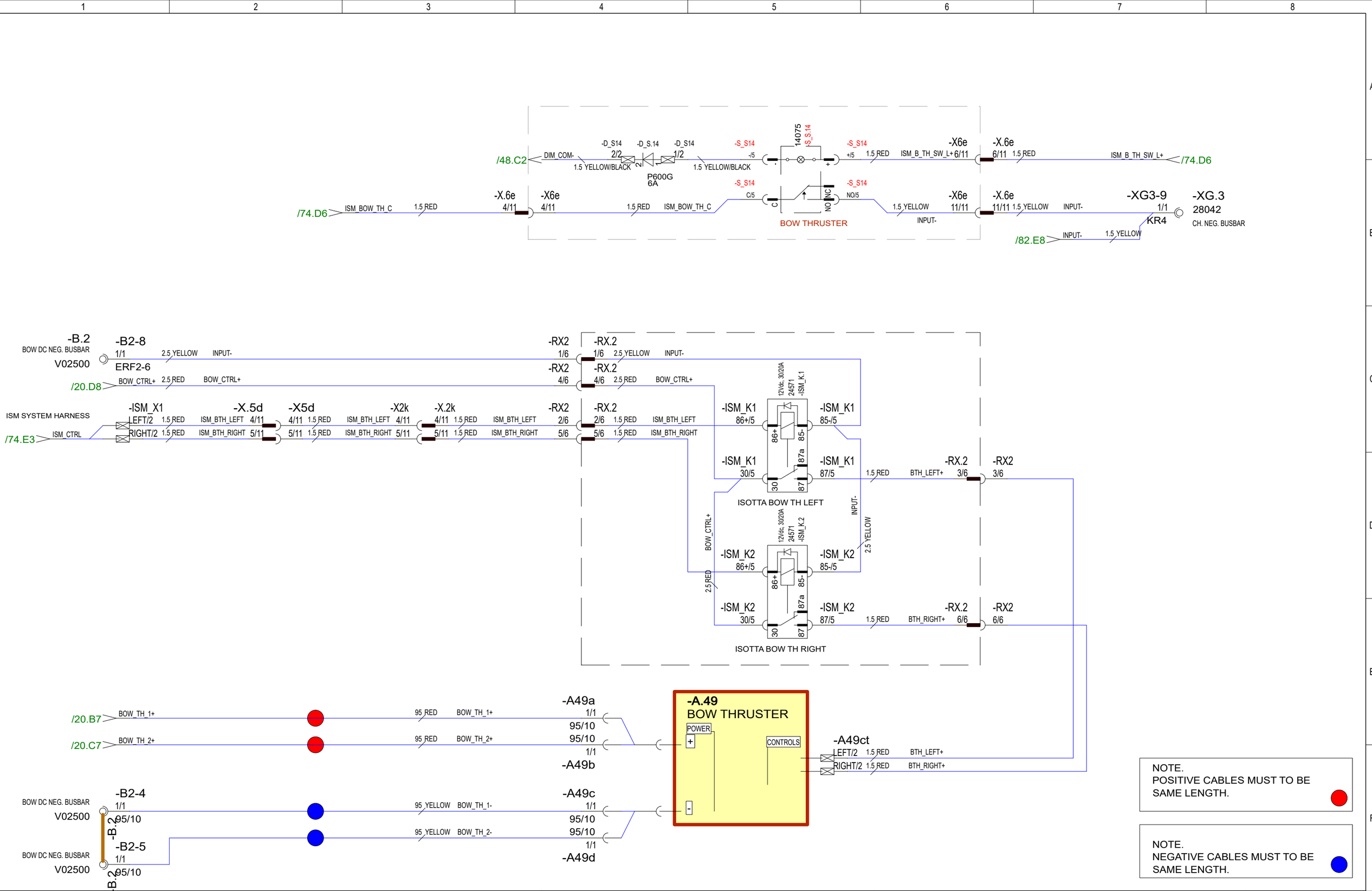

Date of modification	Modified by	Description					
29.5.2024	TuM	C3: 2005065; BOW TH SW RENAMED TO S_S14.	Date	30.10.2023	NAVIX	Axopar	
24.3.2023	TuM	A1: 2004274; NOT MODIFIED.	Drawing by	TuM		Boat	Sub-product code / Product code / Project ID
30.3.2023	TuM	B2: 2004274; -B2-8 RING 10mm -> 6mm; HARNESS CONNECTIONS ADDED.	Sheet rev.	3		45	DC: BOW THRUSTER - DIAGRAM
			Project rev.	C	Copyright by	Boat model	Title / HL / Loc / 26 / 444 Sheet

NOT DEFINED

TO GYRO SYSTEM /27.D1 PWR_PACK_MS+

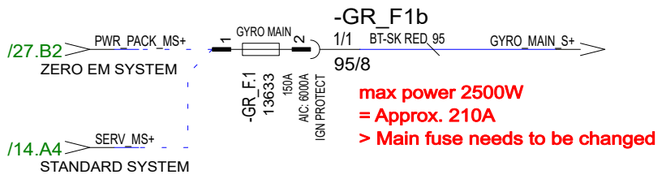

30.10.2023	PF	C3: 2004890; NOT MODIFIED	Date	30.10.2023		Axopar			
24.3.2023	TuM	A1: 2004274; NOT MODIFIED.	Drawing by	TuM		Boat	Sub-product code	Product code	Project ID
30.3.2023	TuM	B2: 2004274; NOT MODIFIED.	Sheet rev.	3		45	DC: GYRO STABILIZATION - DIAGRAM	HL	27 / 444
Date of modification	Modified by	Description	Project rev.	C	Copyright by	Boat model	Title	Loc	Sheet

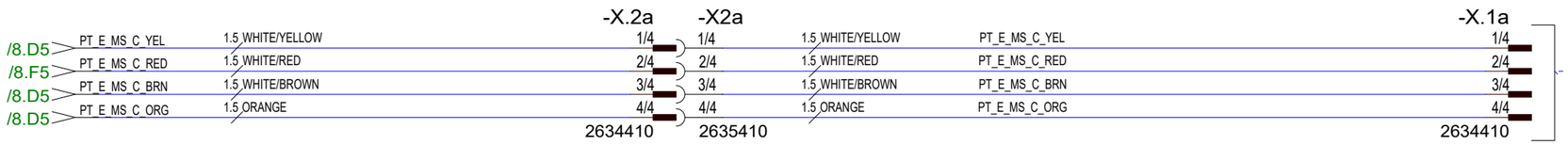

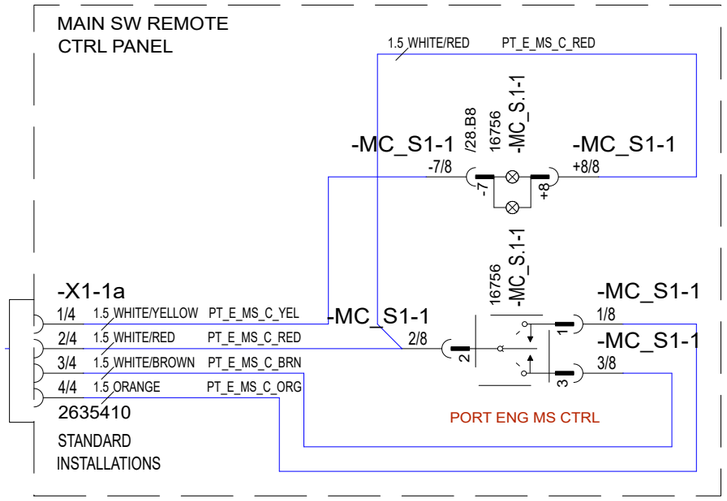

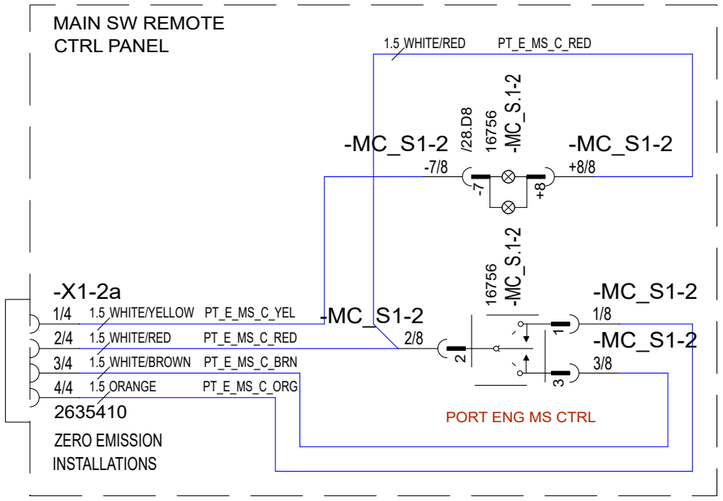

30.10.2023	PF	C3: 2004890; NOT MODIFIED	Date	30.10.2023	NAVIX	Axopar		
24.3.2023	TuM	A1: 2004274; NOT MODIFIED.	Drawing by	TuM		Boat	Sub-product code	Product code	Project ID
30.3.2023	TuM	B2: 2004274; -X2a & -X.2a ADDED.	Sheet rev.	3		45	DC: MAIN SW CONTROL ENG PORT - DIAGRAM	HL	28 / 444
Date of modification	Modified by	Description	Project rev.	C	Copyright by	Boat model	Title	Loc	Sheet

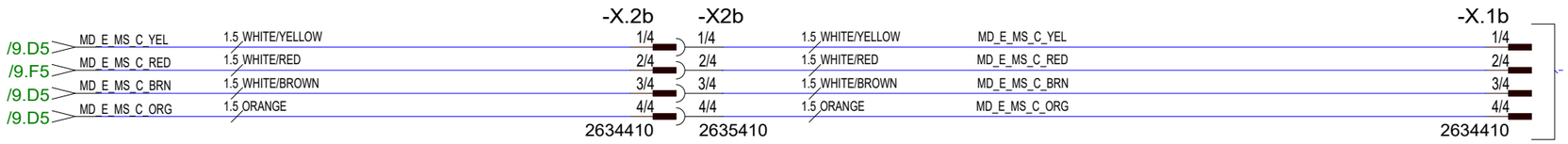

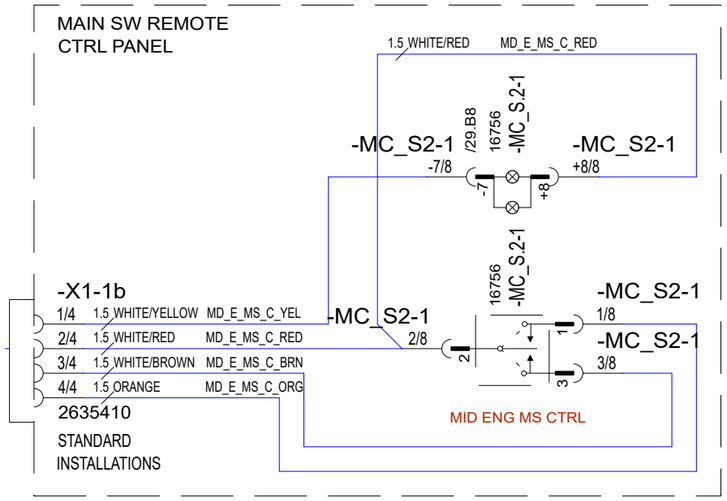

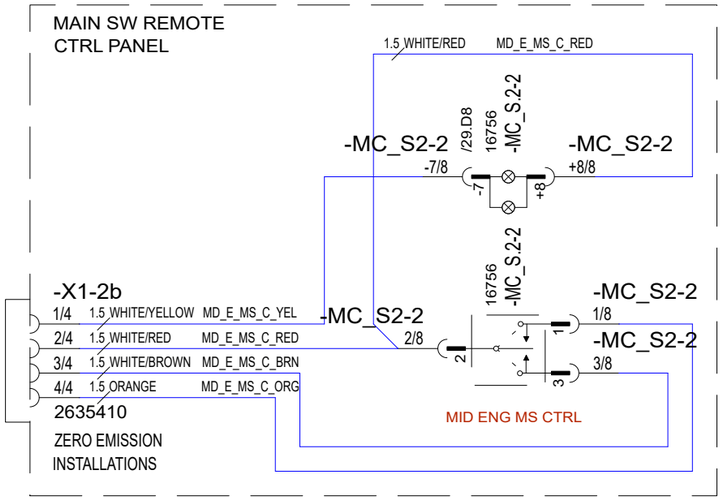

30.10.2023	PF	C3: 2004890; NOT MODIFIED	Date	30.10.2023	NAVIX	Axopar		
24.3.2023	TuM	A1: 2004274; NOT MODIFIED.	Drawing by	TuM		Boat	Sub-product code	Product code	Project ID
30.3.2023	TuM	B2: 2004274; -X2b & -X.2b ADDED.	Sheet rev.	3		45	DC: MAIN SW CONTROL ENG MID - DIAGRAM	HL	29 / 444
Date of modification	Modified by	Description	Project rev.	C	Copyright by	Boat model	Title	Loc	Sheet

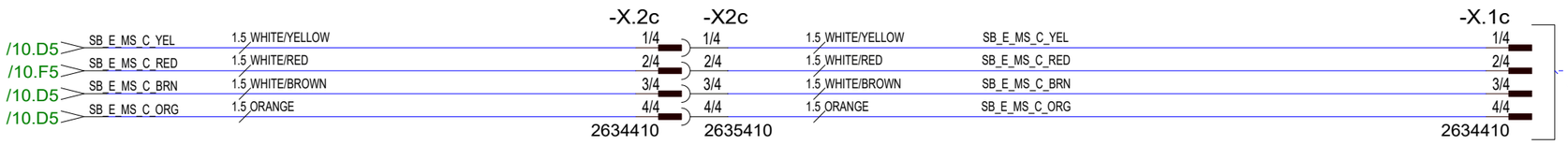

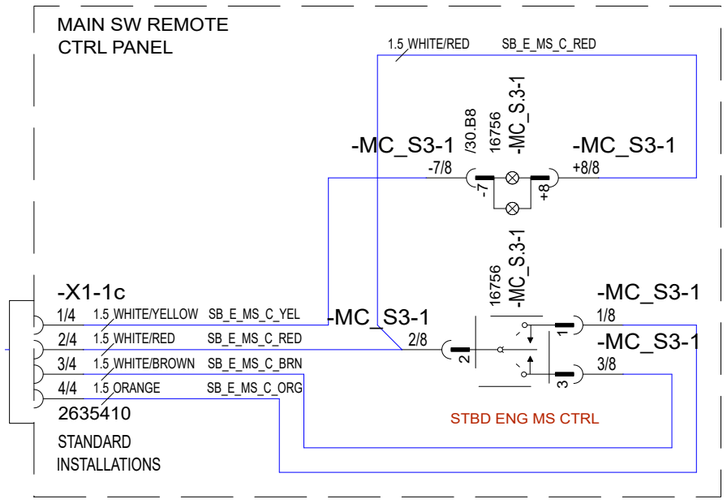

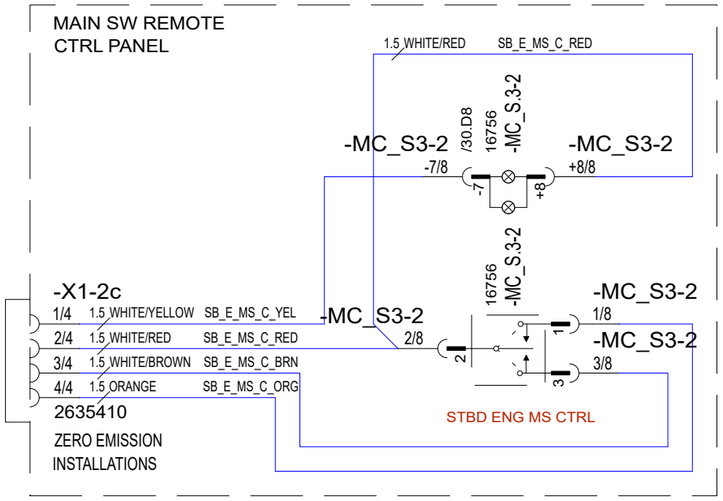

30.10.2023	PF	C3: 2004890; NOT MODIFIED	Date	30.10.2023	NAVIX	Axopar		
24.3.2023	TuM	A1: 2004274; NOT MODIFIED.	Drawing by	TuM		Boat	Sub-product code	Product code	Project ID
30.3.2023	TuM	B2: 2004274; -X2c & -X.2c ADDED.	Sheet rev.	3		45	DC: MAIN SW CONTROL ENG STBD - DIAGRAM	HL	30 / 444
Date of modification	Modified by	Description	Project rev.	C	Copyright by	Boat model	Title	Loc	Sheet

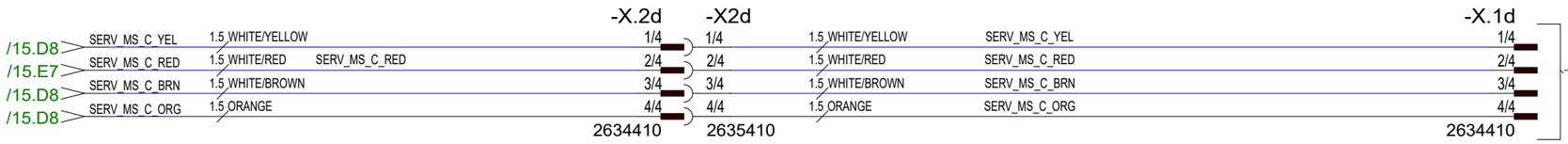

MAIN SW REMOTE
CTRL PANEL

(NOT AVAILABLE)

STANDARD
INSTALLATIONS

MAIN SW REMOTE
CTRL PANEL

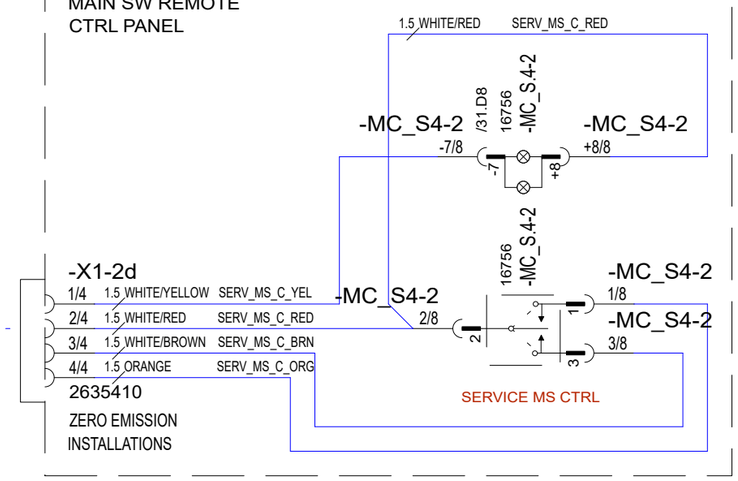

ZERO EMISSION
INSTALLATIONS

Date of modification	Modified by	Description						
30.10.2023	PF	C3: 2004890; NOT MODIFIED	Date	30.10.2023	Copyright by	Axopar		
24.3.2023	TuM	A1: 2004274; NOT MODIFIED.	Drawing by	TuM		Boat	Sub-product code	Product code	Project ID
30.3.2023	TuM	B2: 2004274; -X2d & -X.2d ADDED.	Sheet rev.	3		45	DC: MAIN SW CONTROL SERVICE - DIAGRAM	HL
			Project rev.	C		Boat model	Title	Loc	31/ 444 Sheet

STANDARD INSTALLATIONS
/14.D6 PP/SR_MS_C_YEL
/14.D6 PP/SR_MS_C_BRN
/14.D6 PP/SR_MS_C_ORG
/14.D6 INPUT-
/14.D6 MS_EL_FD_PP/SR+

ZERO EMISSION INSTALLATIONS
/17.C6 PP/SR_MS_C_YEL
/17.C6 PP/SR_MS_C_BRN
/17.C6 PP/SR_MS_C_ORG
/17.D6 INPUT-
/17.D6 MS_EL_FD_PP/SR+

4/6 1.5 WHITE/YELLOW PP/SR_MS_C_YEL
3/6 1.5 WHITE/BROWN PP/SR_MS_C_BRN
6/6 1.5 ORANGE PP/SR_MS_C_ORG
1/6 1.5 YELLOW INPUT-
2/6 1.5 RED MS_EL_FD_PWRP+
DTM04-6P
-MS_X.5a

-X.2e
1/4
2/4
3/4
4/4
2634410

-X2e
1/4 1.5 WHITE/YELLOW PP/SR_MS_C_YEL
2/4 1.5 WHITE/RED PP/SR_MS_C_RED
3/4 1.5 WHITE/BROWN PP/SR_MS_C_BRN
4/4 1.5 ORANGE PP/SR_MS_C_ORG
2635410

-X.1e
1/4
2/4
3/4
4/4
2634410

MAIN SW REMOTE CTRL PANEL
1.5 WHITE/RED PP/SR_MS_C_RED
-MC_S5-1 /32.B8 16756 -MC_S.5-1
-MC_S5-1 -7/8 -7
-MC_S5-1 +8/8 +8
-X1-1e
1/4 1.5 WHITE/YELLOW PP/SR_MS_C_YEL
2/4 1.5 WHITE/RED PP/SR_MS_C_RED
3/4 1.5 WHITE/BROWN PP/SR_MS_C_BRN
4/4 1.5 ORANGE PP/SR_MS_C_ORG
2635410
STANDARD INSTALLATIONS
-MC_S5-1 2/8
16756 -MC_S.5-1
-MC_S5-1 1/8
-MC_S5-1 3/8
SERVICE MS CTRL

STANDARD INSTALLATIONS
/14.E6 MS_EL_FD_PP/SR+

ZERO EMISSION INSTALLATIONS
/17.D6 MS_EL_FD_PP/SR+

-MS_X.5b
2/4 1.5 RED MS_EL_FD_PWRP+
DT044P-E004

-XG.1a
28042
HH. NEG. BUSBAR 1
-XG1a-5
1/1 1.5 YELLOW INPUT-
ERF1,25-4

STANDARD INSTALLATIONS
/14.E6 PP/SR_MS_C_RED

ZERO EMISSION INSTALLATIONS
/17.E6 PP/SR_MS_C_RED

-MS_X.5b
3/4 1.5 WHITE/RED PP/SR_MS_C_RED
DT044P-E004

MAIN SW REMOTE CTRL PANEL
1.5 WHITE/RED PP/SR_MS_C_RED
-MC_S5-2 /32.D8 16756 -MC_S.5-2
-MC_S5-2 -7/8 -7
-MC_S5-2 +8/8 +8
-X1-2e
1/4 1.5 WHITE/YELLOW PP/SR_MS_C_YEL
2/4 1.5 WHITE/RED PP/SR_MS_C_RED
3/4 1.5 WHITE/BROWN PP/SR_MS_C_BRN
4/4 1.5 ORANGE PP/SR_MS_C_ORG
2635410
ZERO EMISSION INSTALLATIONS
-MC_S5-2 2/8
16756 -MC_S.5-2
-MC_S5-2 1/8
-MC_S5-2 3/8
POWER PACK MS CTRL

30.10.2023	PF	C3: 2004890; NOT MODIFIED	Date	30.10.2023	NAVIX	Axopar			
24.3.2023	TuM	A1: 2004274; NOT MODIFIED.	Drawing by	TuM		Boat	Sub-product code	Product code	Project ID
30.3.2023	TuM	B2: 2004274; -X2e & -X.2e ADDED.	Sheet rev.	3		45	DC: MAIN SW CONTROL POWER P/ SERVICE - DIAGRAM	HL	32 / 444
Date of modification	Modified by	Description	Project rev.	C	Copyright by	Boat model	Title	Loc	Sheet

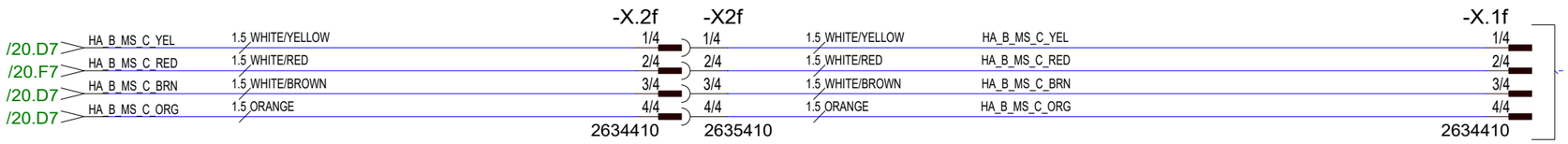

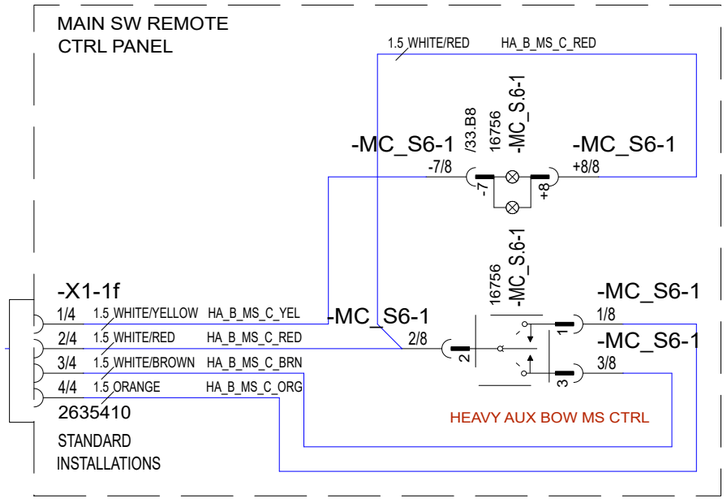

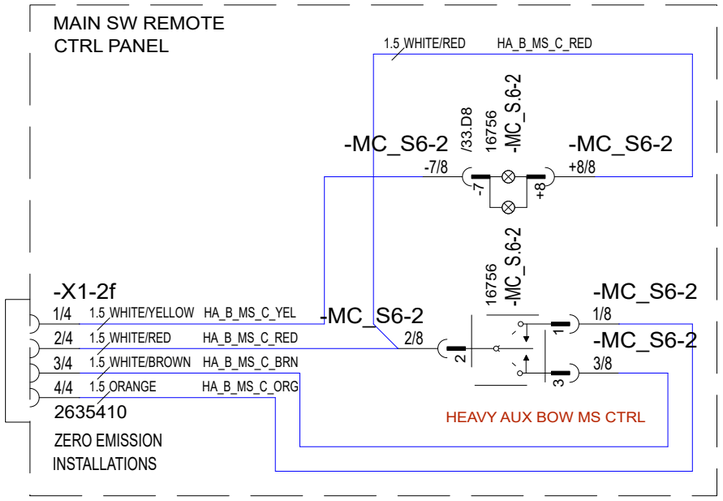

30.10.2023	PF	C3: 2004890; NOT MODIFIED	Date	30.10.2023	NAVIX	Axopar		
24.3.2023	TuM	A1: 2004274; NOT MODIFIED.	Drawing by	TuM		Boat	Sub-product code	Product code	Project ID
30.3.2023	TuM	B2: 2004274; -X2f & -X.2f ADDED.	Sheet rev.	3		45	DC: MAIN SW CONTROL HEAVY AUX BOW - DIAGRAM	HL	33 / 444
Date of modification	Modified by	Description	Project rev.	C	Copyright by	Boat model	Title	Loc	Sheet

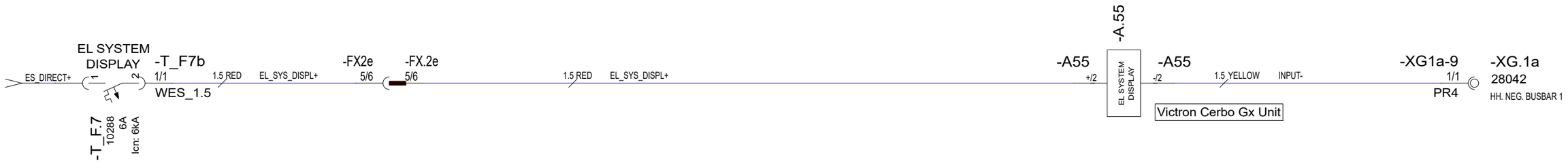

29.5.2024	TuM	C3: 2004998; VE.BUS BMS V1 system removed	Date 30.10.2023	Copyright by NAVIX	Axopar Boat			
24.3.2023	TuM	A1: 2004274; NOT MODIFIED.	Drawing by TuM					
30.3.2023	TuM	B2: 2004274; -XG1a-9 & -XG1a-10, -F_X2c ADDED.	Sheet rev. 3		45 Boat model	DC: POWER CONTROL SYSTEM - DIAGRAM Title	HL Loc	34 / 444 Sheet
Date of modification	Modified by	Description	Project rev. C					

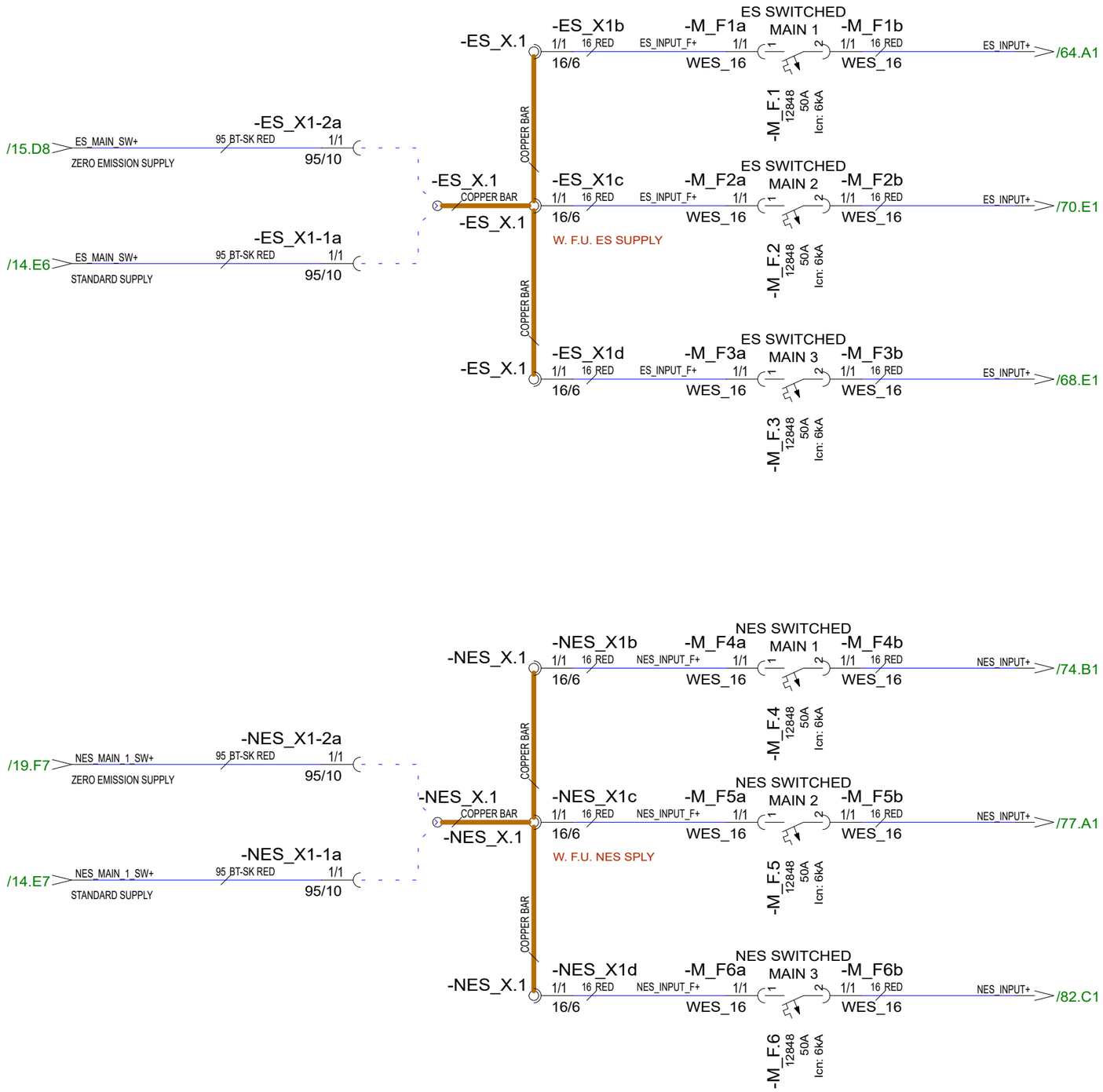

Date of modification	Modified by	Description						
30.10.2023	PF	C3: 2004890; NOT MODIFIED	Date	30.10.2023	NAVIX	Axopar		
24.3.2023	TuM	A1: 2004274; NOT MODIFIED.	Drawing by	TuM		Boat	Sub-product code	Product code / Project ID
30.3.2023	TuM	B2: 2004274; NOT MODIFIED.	Sheet rev.	3		45	DC: MAIN SUPPLY WARDOBE FU - DIAGRAM	HL
			Project rev.	C	Copyright by	Boat model	Title	Loc / Sheet: 35 / 444

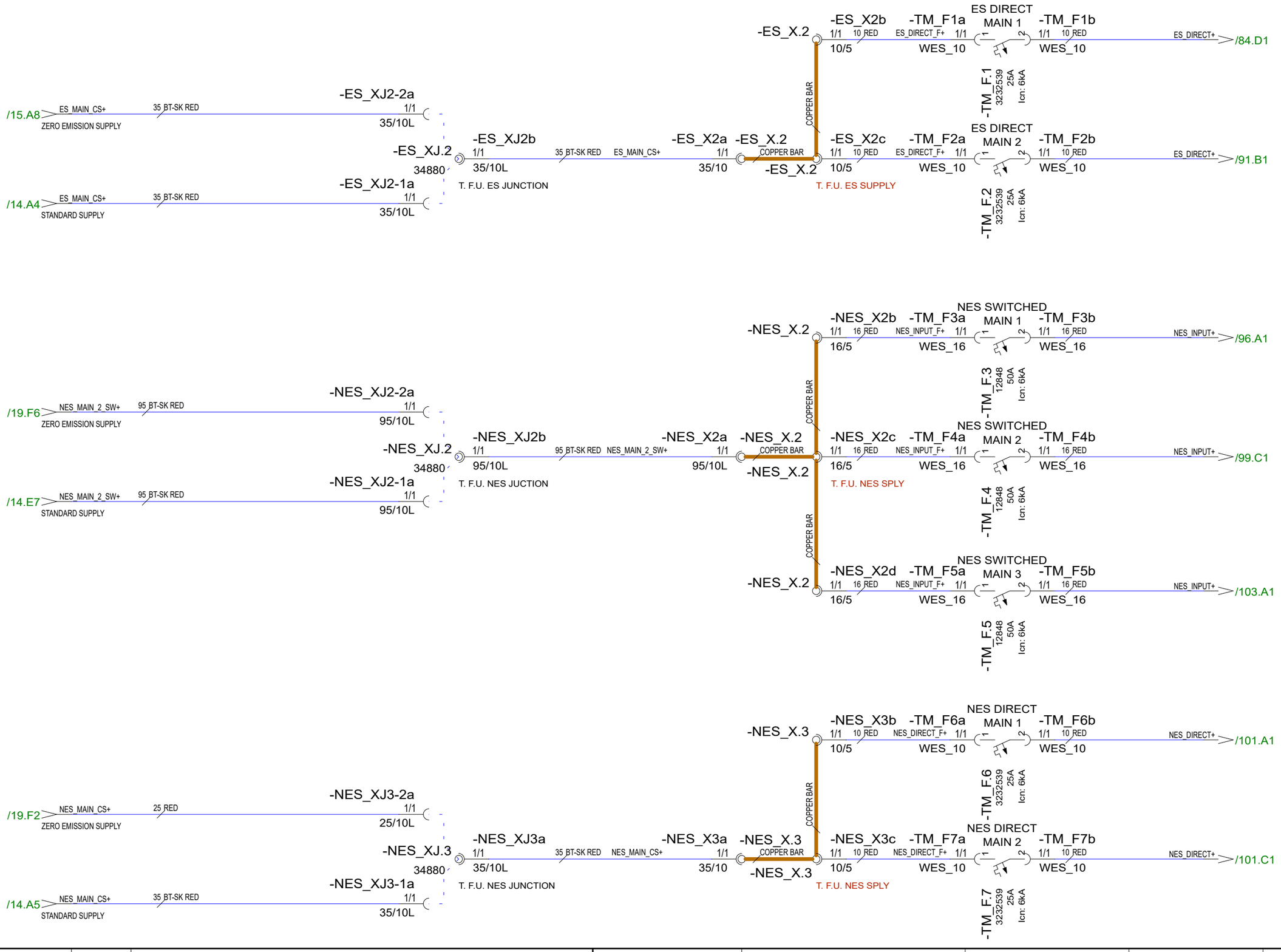

30.10.2023	PF	C3: 2004890; NOT MODIFIED	Date	30.10.2023	NAVIX	Axopar			
24.3.2023	TuM	A1: 2004274; NOT MODIFIED.	Drawing by	TuM		Boat	Sub-product code	Product code	Project ID
30.3.2023	TuM	B2: 2004274; JUNCTION CONNECTIONS ADDED.	Sheet rev.	3		45	DC: MAIN SUPPLY TECHNICAL FU - DIAGRAM	HL	36 / 444
Date of modification	Modified by	Description	Project rev.	C	Copyright by	Boat model	Title	Loc	Sheet

DC CHARGNING SYSTEMS

Date of modification	Modified by	Description		
30.10.2023	PF	C3: 2004890; NOT MODIFIED	Date	30.10.2023
24.3.2023	TuM	A1: 2004274; NOT MODIFIED.	Drawing by	TuM
30.3.2023	TuM	B2: 2004274; NOT MODIFIED.	Sheet rev.	3
			Project rev.	C

Copyright by

NAVIX

Boat	Sub-product code	Product code	Project ID
Axopar			
Boat model	Title	HL	Sheet
45	------ DC CHARGING SYSTEMS ------	Loc	37 / 444

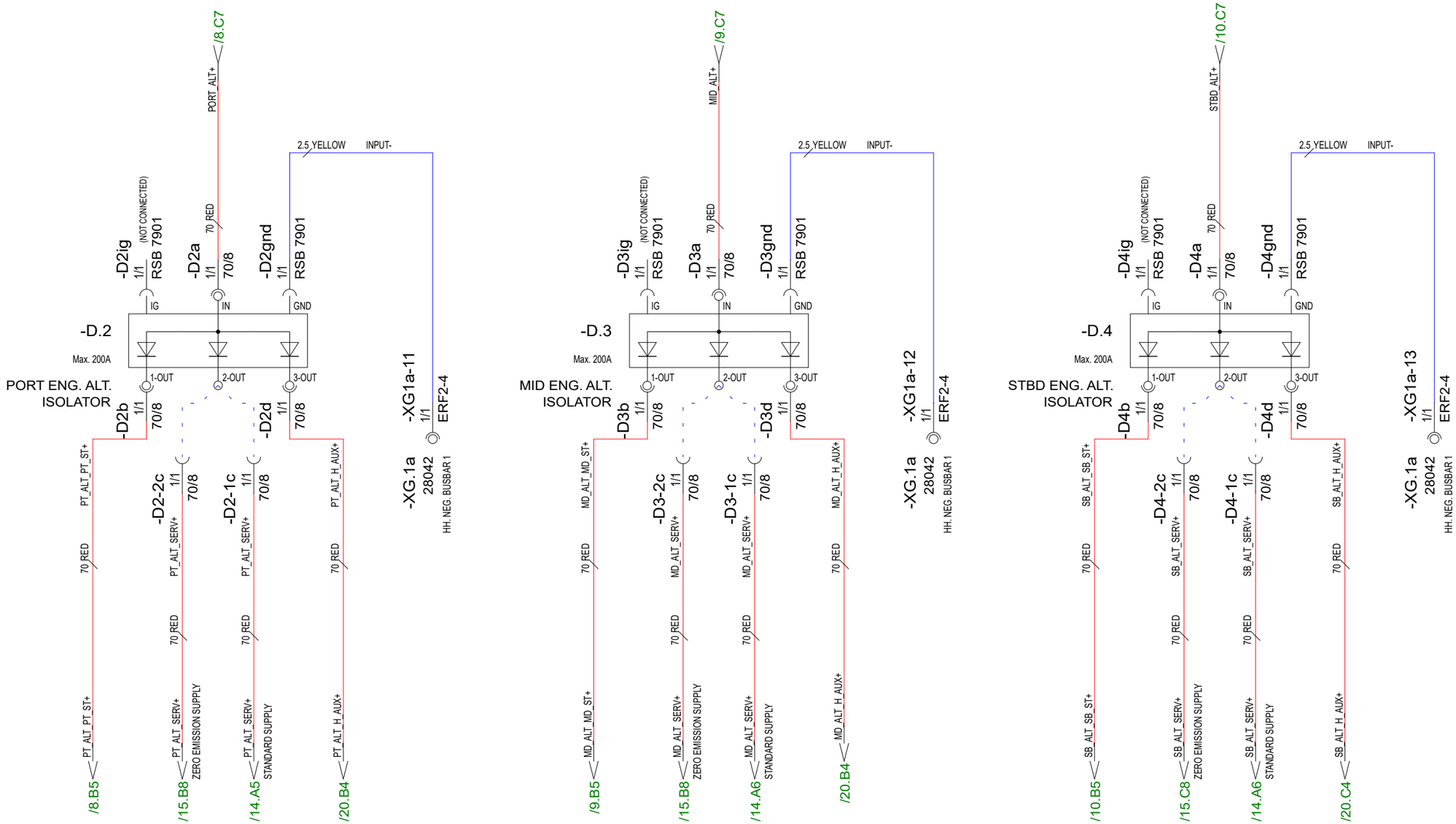

Date of modification	Modified by	Description
30.10.2023	PF	C3: 2004890; ALTERNATOR CABLES 50MM2->70MM2
24.3.2023	TuM	A1: 2004274; NOT MODIFIED.
30.3.2023	TuM	B2: 2004274; NEGATIVE CONNECTIONS -XG1a-11...3 ADDED.

Date	30.10.2023
Drawing by	TuM
Sheet rev.	3
Project rev.	C

NAVIX
Copyright by

Axopar			
Boat	Sub-product code	Product code	Project ID
45	DC: ALTERNATOR CHARGING - DIAGRAM	HL	38 / 444
Boat model	Title	Loc	Sheet

NOTE.
POSITIVE CABLES MUST TO BE SAME LENGTH.

NOTE.
POSITIVE CABLES MUST TO BE SAME LENGTH.

NOTE.
NEGATIVE CABLES MUST TO BE SAME LENGTH.

-DD_X1a DC-DC_M1_IN+ 1/1 50/8 /15.A4
-DD_X1 COPPER BAR COPPER BAR
-DD_X2a DC-DC_M2_IN+ 1/1 50/8 /15.B4
-DD_X2 COPPER BAR COPPER BAR
-DD_X3a DC-DC_M3_IN+ 1/1 50/8 /15.B4
-DD_X3 COPPER BAR COPPER BAR

DC/DC CHARGER 1 IN -DD_F.1 21614 60A AIC: 6000A IGN PROTECT
DC/DC CHARGER 2 IN -DD_F.3 21614 60A AIC: 6000A IGN PROTECT
DC/DC CHARGER 3 IN -DD_F.5 21614 60A AIC: 6000A IGN PROTECT
DC/DC CHARGER 4 IN -DD_F.7 21614 60A AIC: 6000A IGN PROTECT
DC/DC CHARGER 5 IN -DD_F.9 21614 60A AIC: 6000A IGN PROTECT
DC/DC CHARGER 6 IN -DD_F.11 21614 60A AIC: 6000A IGN PROTECT

-DD_F1b DC-DC_CHR1_IN 1/1 16/8L
-DD_F3b DC-DC_CHR2_IN 1/1 16/8
-DD_F5b DC-DC_CHR3_IN 1/1 16/8L
-DD_F7b DC-DC_CHR4_IN 1/1 16/8
-DD_F9b DC-DC_CHR5_IN 1/1 16/8L
-DD_F11b DC-DC_CHR6_IN 1/1 16/8

CHR_DISCNN+ /123.F6 ZERO EM SYSTEM
CHR_DISCNN+ /109.F6 STANDARD SYSTEM, EU
CHR_DISCNN+ /138.F6 STANDARD SYSTEM, USA
CHR_DISCNN+ /152.F6 ZERO EM SYSTEM, USA

-TAC_X.1dc 2/2 DT04-2P

1.5 RED CHR_DISCNN+

-A57a IN/1 16 RED WES_16
-A58a IN/1 16 RED WES_16
-A59a IN/1 16 RED WES_16
-A60a IN/1 16 RED WES_16
-A61a IN/1 16 RED WES_16
-A62a IN/1 16 RED WES_16

-A57d -A58d -A59d -A60d -A61d -A62d
H L

-A57 DC-DC CHARGER 1 12VDC/12VDC 30A
-A58 DC-DC CHARGER 2 12VDC/12VDC 30A
-A59 DC-DC CHARGER 3 12VDC/12VDC 30A
-A60 DC-DC CHARGER 4 12VDC/12VDC 30A
-A61 DC-DC CHARGER 5 12VDC/12VDC 30A
-A62 DC-DC CHARGER 6 12VDC/12VDC 30A

REMOTE 12Vdc 12Vdc

-A57c -A58c -A59c -A60c -A61c -A62c
GND/1 WES_16

-A57b DC-DC_CHR1_OUT 1/1 WES_16
-A58b DC-DC_CHR2_OUT 1/1 WES_16
-A59b DC-DC_CHR3_OUT 1/1 WES_16
-A60b DC-DC_CHR4_OUT 1/1 WES_16
-A61b DC-DC_CHR5_OUT 1/1 WES_16
-A62b DC-DC_CHR6_OUT 1/1 WES_16

16 YELLOW DC-DC_CHR-

-DD_F2b 1/1 16 RED 16/8
-DD_F4b 1/1 16 RED 16/8L
-DD_F6b 1/1 16 RED 16/8
-DD_F8b 1/1 16 RED 16/8L
-DD_F10b 1/1 16 RED 16/8
-DD_F12b 1/1 16 RED 16/8L

DC/DC CHARGER 1 OUT -DD_F.2 21614 60A AIC: 6000A IGN PROTECT
DC/DC CHARGER 2 OUT -DD_F.4 21614 60A AIC: 6000A IGN PROTECT
DC/DC CHARGER 3 OUT -DD_F.6 21614 60A AIC: 6000A IGN PROTECT
DC/DC CHARGER 4 OUT -DD_F.8 21614 60A AIC: 6000A IGN PROTECT
DC/DC CHARGER 5 OUT -DD_F.10 21614 60A AIC: 6000A IGN PROTECT
DC/DC CHARGER 6 OUT -DD_F.12 21614 60A AIC: 6000A IGN PROTECT

-DD_X7a 1/1 16/8
-DD_X7b 1/1 16/8
-DD_X8a 1/1 16/8
-DD_X8b 1/1 16/8
-DD_X9a 1/1 16/8
-DD_X9b 1/1 16/8

COPPER BAR COPPER BAR COPPER BAR COPPER BAR

-DD_X4 -DD_X5 -DD_X6 -DD_X7 -DD_X8 -DD_X9

-DD_X4a DC-DC_M1_OUT+ 1/1 50/8
-DD_X5a DC-DC_M2_OUT+ 1/1 50/8
-DD_X6a DC-DC_M3_OUT+ 1/1 50/8

-DD_X7c INPUT- 1/1 50/8
-DD_X8c INPUT- 1/1 50/8
-DD_X9c INPUT- 1/1 50/8

50 YELLOW

/18.E7 /18.E8 /18.E8

-B1-14 -B1-15 -B1-16
1/1 50/10 -B.1
XXXXX MAIN DC NEG. BUSBAR

30.10.2023	PF	C3: 2004890; NOT MODIFIED	Date	30.10.2023	NAVIX	Axopar	
24.3.2023	TuM	A1: 2004274; NOT MODIFIED.	Drawing by	TuM		Boat	Sub-product code / Product code / Project ID
30.3.2023	TuM	B2: 2004274; TAC_X.1dc VARIANT CONNECTIONS ADDED.	Sheet rev.	3		45	DC: DC/DC CHARGING - DIAGRAM
Date of modification	Modified by	Description	Project rev.	C	Copyright by	Boat model	Title / HL / Loc / 39 / 444 Sheet

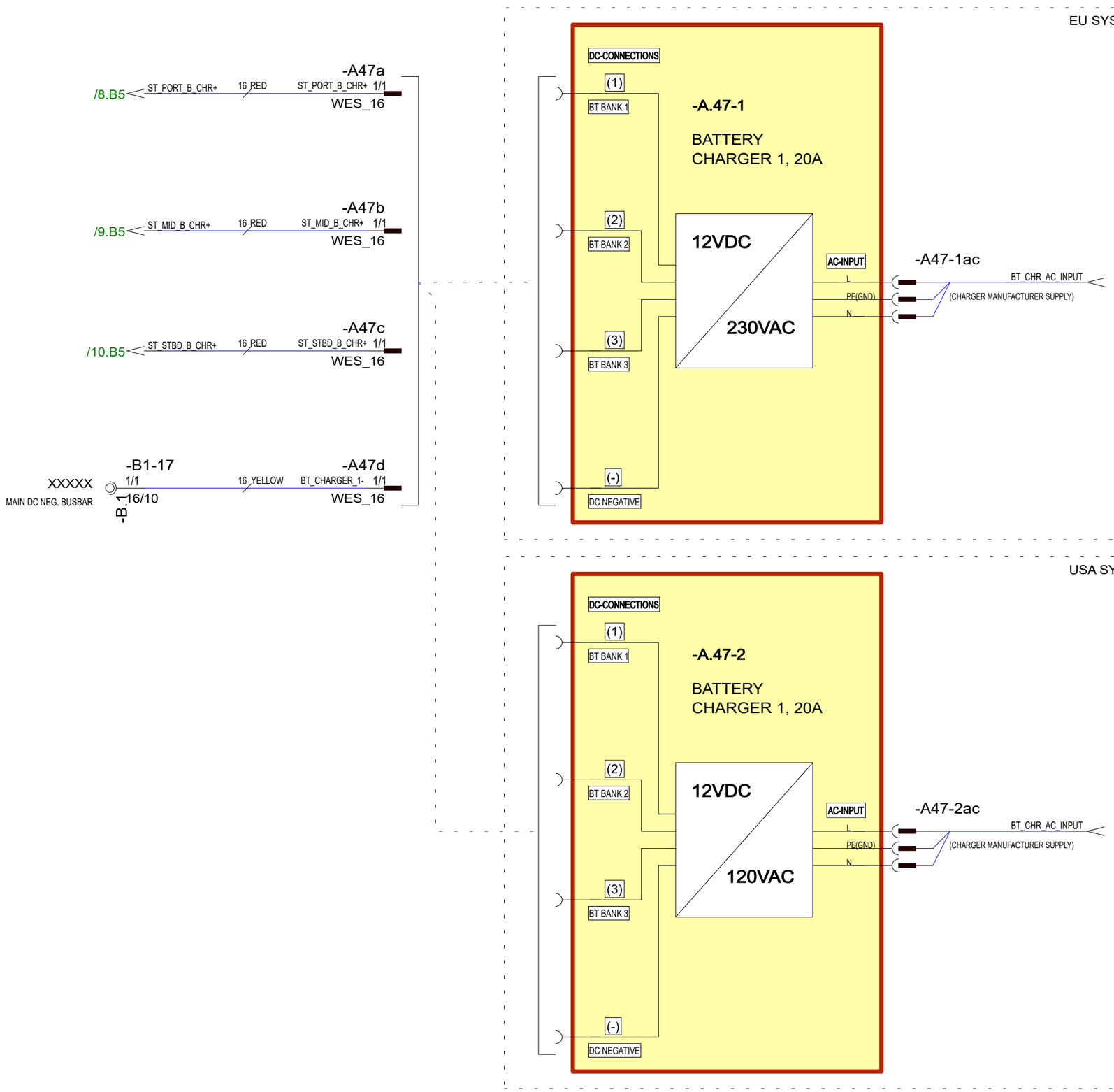

Date of modification	Modified by	Description
30.10.2023	PF	C3: 2004890; NOT MODIFIED
24.3.2023	TuM	A1: 2004274; USA SYSTEM ADDED.
30.3.2023	TuM	B2: 2004274; NOT MODIFIED.

Date	30.10.2023
Drawing by	TuM
Sheet rev.	3
Project rev.	C

Copyright by

NAVIX

Axopar Boat			
45 Boat model	DC: START BT CHARGING - DIAGRAM Title	HL Loc	40 / 444 Sheet

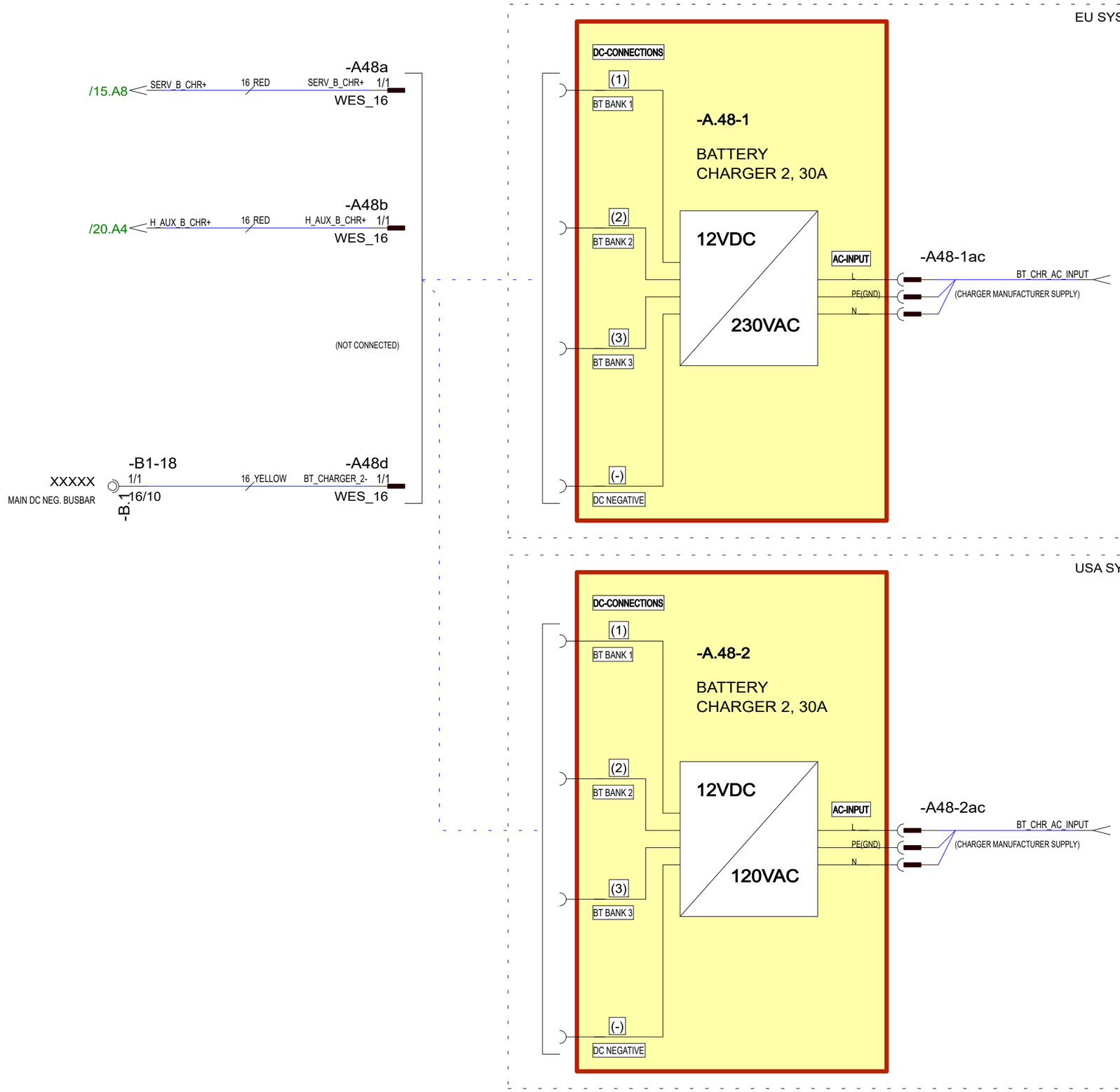

Date of modification	Modified by	Description
30.10.2023	PF	C3: 2004890; NOT MODIFIED
24.3.2023	TuM	A1: 2004274; USA SYSTEM ADDED.
30.3.2023	TuM	B2: 2004274; NOT MODIFIED.

Date	30.10.2023
Drawing by	TuM
Sheet rev.	3
Project rev.	C

Copyright by

Boat	Sub-product code	Product code	Project ID
Axopar			
Boat model	**Title**		**Loc**
45	DC: SERVICE BT / HA BOW BT CHARGING - DIAGRAM	HL	41/ 444 Sheet

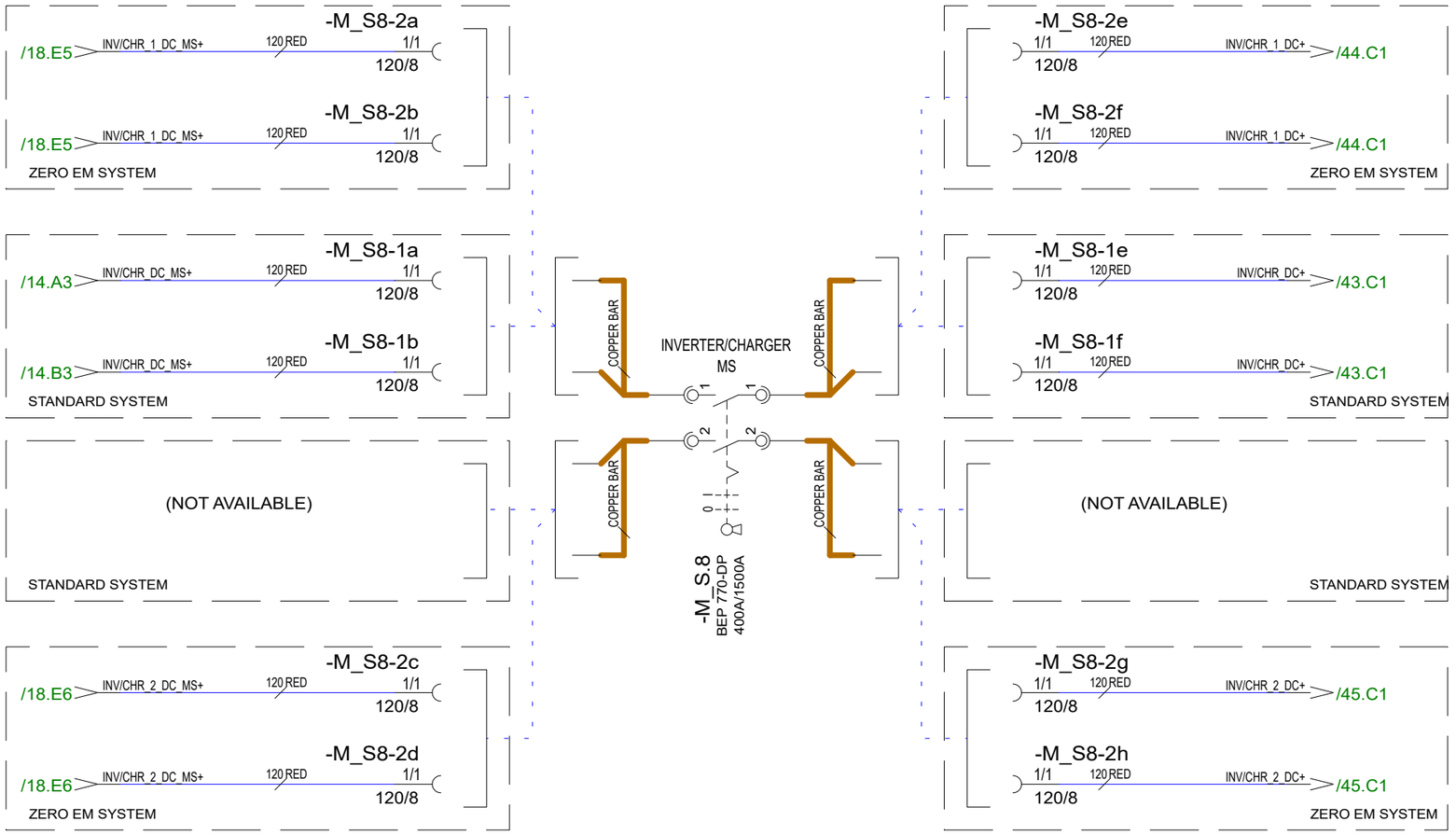

Date of modification	Modified by	Description
30.10.2023	PF	C3: 2004890; NOT MODIFIED
24.3.2023	TuM	A1: 2004274; NOT MODIFIED.
30.3.2023	TuM	B2: 2004274; NOT MODIFIED.

Date	30.10.2023
Drawing by	TuM
Sheet rev.	3
Project rev.	C

Copyright by

Axopar			
Boat	Sub-product code	Product code	Project ID
45	DC: INVERTER/ CHARGER MAIN SWITCH - DIAGRAM		
Boat model	Title	Loc	Sheet
		TL	42 / 444

NOTE.
POSITIVE CABLES MUST TO BE SAME LENGTH.

NOTE.
NEGATIVE CABLES MUST TO BE SAME LENGTH.

STANDARD SYSTEM - EU

-A.77
INVERTER/CHARGER
3000VA
12Vdc,120A
230Vac, 32A

DC-CONNECTIONS
BAT+
BAT-
CASE GROUND
PE(GND)

12VDC / 230VAC

AC OUT 1
L
PE(GND)
N

-A77ac_O1
L/3 6 H07RN-F_BROWN I/C_OUT1_L /110.B1
PE/3 6 H07RN-F_YELLOW/GREEN I/C_OUT1_PE /110.B1
N/3 6 H07RN-F_BLUE I/C_OUT1_N /110.B1

TO ZERO EM INV/CHR AC MAIN BRK UNIT - EU

AC OUT 2
L
PE(GND)
N

-A77ac_O2
L/3 4 H07RN-F_BROWN I/C_OUT2_L /110.E1
PE/3 4 H07RN-F_YELLOW/GREEN I/C_OUT2_PE /110.E1
N/3 4 H07RN-F_BLUE I/C_OUT2_N /110.E1

TO ZERO EM INV/CHR AC MAIN BRK UNIT - EU

AC IN
L
PE(GND)
N

-A77ac_IN
L/3 4 H07RN-F_BROWN SH_SHIP_L /105.C8
PE/3 4 H07RN-F_YELLOW/GREEN SH_SHIP_PE /105.C8
N/3 4 H07RN-F_BLUE SH_SHIP_N /105.C8

FROM
ZERO EM INV/CHR AC MAIN BRK UNIT - EU

/42.C6 INV/CHR_DC+ 120 RED INV/CHR_DC+ **-A77a** BAT+/1 120/8
/42.C6 INV/CHR_DC+ 120 RED INV/CHR_DC+ **-A77b** 120/8 BAT+/1

120 YELLOW INV/CHR_DC- **-A77c** BAT-/1 120/8
120 YELLOW INV/CHR_DC- **-A77d** 120/8 BAT-/1

95 R2 95 KEVI - YELLOW/GREEN INV/CHR_PE **-A77gnd** PE/1 95/8

-B-B1-27 1/1 -B.1 120/10 XXXXX MAIN DC NEG. BUSBAR
-B-B1-28 1/1 -B.1 120/10 XXXXX MAIN DC NEG. BUSBAR
-B-B1-29 1/1 -B.1 95/10 XXXXX MAIN DC NEG. BUSBAR

STANDARD SYSTEM - USA

-A.161
INVERTER/CHARGER
3000VA
12Vdc,120A
120Vac, 50A

DC-CONNECTIONS
BAT+
BAT-
CASE GROUND
PE(GND)

12VDC / 120VAC

AC OUT 1
(No connection) L2
L1
PE(GND)
N

-A161ac_O1
L/3 AWG8 UL1426 BLACK I/C_OUT1_L /139.B1
PE/3 AWG8 UL1426 GREEN I/C_OUT1_PE /139.B1
N/3 AWG8 UL1426 WHITE I/C_OUT1_N /139.B1

TO ZERO EM INV/CHR AC MAIN BRK UNIT - USA

AC OUT 2
(No connection) L2
L1
PE(GND)
N

-A161ac_O2
L/3 AWG10 UL1426 BLACK I/C_OUT2_L /139.E1
PE/3 AWG10 UL1426 GREEN I/C_OUT2_PE /139.E1
N/3 AWG10 UL1426 WHITE I/C_OUT2_N /139.E1

TO ZERO EM INV/CHR AC MAIN BRK UNIT - USA

AC IN
(No connection) L2
L1
PE(GND)
N

-A161ac_IN
L/3 AWG10 UL1426 BLACK SH1_SHIP_L /134.C8
PE/3 AWG10 UL1426 GREEN SH1_SHIP_PE /134.C8
N/3 AWG10 UL1426 WHITE SH1_SHIP_N /134.C8

FROM
ZERO EM INV/CHR AC MAIN BRK UNIT - USA

Date of modification	Modified by	Description						
30.10.2023	PF	C3: 2004890; NOT MODIFIED	Date	30.10.2023	NAVIX	Axopar		
24.3.2023	TuM	A1: 2004274; USA SYSTEM ADDED.	Drawing by	TuM		Boat	Sub-product code	Product code / Project ID
30.3.2023	TuM	B2: 2004274; NOT MODIFIED.	Sheet rev.	3	Copyright by	45	DC: STANDARD INVERTER CHARGER - DIAGRAM	HL
			Project rev.	C		Boat model	Title	Loc / Sheet 43 / 444

NOTE.
POSITIVE CABLES MUST TO BE SAME LENGTH.

NOTE.
NEGATIVE CABLES MUST TO BE SAME LENGTH.

ZERO EMISSION SYSTEM - EU

-A.63
INVERTER/CHARGER 1
3000VA
12Vdc,120A
230Vac, 32A

DC-CONNECTIONS
BAT+
BAT-
CASE GROUND
PE(GND)

12VDC
230VAC

AC OUT 1
L
PE(GND)
N

AC OUT 2
L
PE(GND)
N

AC IN
L
PE(GND)
N

-A63ac_O1
L/3 10 H07RN-F_BROWN I/C_OUT1_L /124.B1
PE/3 10 H07RN-F_YELLOW/GREEN I/C_OUT1_PE /124.B1
N/3 10 H07RN-F_BLUE I/C_OUT1_N /124.B1
TO ZERO EM INV/CHR AC MAIN BRK UNIT - EU

-A63ac_O2
L/3 4 H07RN-F_BROWN I/C_OUT2_L /125.C1
PE/3 4 H07RN-F_YELLOW/GREEN I/C_OUT2_PE /125.C1
N/3 4 H07RN-F_BLUE I/C_OUT2_N /125.C1
TO ZERO EM INV/CHR AC MAIN BRK UNIT - EU

-A63ac_IN
L/3 4 H07RN-F_BROWN SH1_SHIP_L /119.C8
PE/3 4 H07RN-F_YELLOW/GREEN SH1_SHIP_PE /119.C8
N/3 4 H07RN-F_BLUE SH1_SHIP_N /119.C8
FROM
ZERO EM INV/CHR AC MAIN BRK UNIT - EU

/42.B6 INV/CHR_1_DC+ 120 RED INV/CHR_1_DC+ -A63a BAT+/1 120/8
/42.C6 INV/CHR_1_DC+ 120 RED INV/CHR_1_DC+ -A63b 120/8 BAT+/1

-A63c 120 YELLOW INV/CHR_1_DC- BAT-/1 120/8
-A63d 120 YELLOW INV/CHR_1_DC- 120/8 BAT-/1

-A63gnd 95 R2 95 KEVI - YELLOW/GREEN INV/CHR_1_PE PE/1 95/8

INV/CHR_1_DC- /18.D5
INV/CHR_1_DC- /18.D5

-B-B1-6 -B.1 1/1 95/10
XXXXX MAIN DC NEG. BUSBAR

ZERO EMISSION SYSTEM - USA

-A.173
INVERTER/CHARGER 1
3000VA
12Vdc,120A
120Vac, 50A

DC-CONNECTIONS
BAT+
BAT-
CASE GROUND
PE(GND)

12VDC
120VAC

AC OUT 1 (No connection L2)
L
PE(GND)
N

AC OUT 2 (No connection L2)
L
PE(GND)
N

AC IN (No connection L2)
L
PE(GND)
N

-A173ac_O1
L/3 AWG6 UL1426 BLACK I/C_OUT1_L /153.B1
PE/3 AWG6 UL1426 GREEN I/C_OUT1_PE /153.B1
N/3 AWG6 UL1426 WHITE I/C_OUT1_N /153.B1
TO ZERO EM INV/CHR AC MAIN BRK UNIT - USA

-A173ac_O2
L/3 AWG10 UL1426 BLACK I/C_OUT2_L /154.C1
PE/3 AWG10 UL1426 GREEN I/C_OUT2_PE /154.C1
N/3 AWG10 UL1426 WHITE I/C_OUT2_N /154.C1
TO ZERO EM INV/CHR AC MAIN BRK UNIT - USA

-A173ac_IN
L/3 AWG10 UL1426 BLACK SH1_SHIP_L /148.C8
PE/3 AWG10 UL1426 GREEN SH1_SHIP_PE /148.C8
N/3 AWG10 UL1426 WHITE SH1_SHIP_N /148.C8
FROM
ZERO EM INV/CHR AC MAIN BRK UNIT - USA

Date of modification	Modified by	Description
26.4.2024	TuM	C3: 2004998; BMS UPDATE, INV/CHR NEG TO LYNX.
24.3.2023	TuM	A1: 2004274; USA SYSTEM ADDED.
6.7.2023	TuM	B2: 2004274; AC_OUT1 WIRE SIZES MODIFIED.

Date	30.10.2023
Drawing by	TuM
Sheet rev.	3
Project rev.	C

Copyright by

NAVIX

Axopar			
Boat	Sub-product code	Product code	Project ID
45	DC: ZERO EM. INVERTER CHARGER 1 - DIAGRAM		
Boat model	Title	Loc	Sheet
		HL	44 / 444

NOTE.
POSITIVE CABLES MUST TO BE SAME LENGTH.

NOTE.
NEGATIVE CABLES MUST TO BE SAME LENGTH.

ZERO EMISSION SYSTEM - EU

-A.64
INVERTER/CHARGER 2
3000VA
12Vdc,120A
230Vac, 32A

DC-CONNECTIONS
BAT+
BAT-
12VDC
230VAC
CASE GROUND
PE(GND)

AC OUT 1
L
PE(GND)
N

-A64ac_O1
L/3 10 H07RN-F_BROWN I/C_OUT1_L /124.E1
PE/3 10 H07RN-F_YELLOW/GREEN I/C_OUT1_PE /124.E1
N/3 10 H07RN-F_BLUE I/C_OUT1_N /124.E1
TO ZERO EM INV/CHR AC MAIN BRK UNIT - EU

AC OUT 2
L
PE(GND)
N

-A64ac_O2
L/3 4 H07RN-F_BROWN I/C_OUT2_L /125.E1
PE/3 4 H07RN-F_YELLOW/GREEN I/C_OUT2_PE /125.E1
N/3 4 H07RN-F_BLUE I/C_OUT2_N /125.E1
TO ZERO EM INV/CHR AC MAIN BRK UNIT - EU

AC IN
L
PE(GND)
N

-A64ac_IN
L/3 4 H07RN-F_BROWN SH1_SHIP_L /119.D8
PE/3 4 H07RN-F_YELLOW/GREEN SH1_SHIP_PE /119.D8
N/3 4 H07RN-F_BLUE SH1_SHIP_N /119.D8
FROM
ZERO EM INV/CHR AC MAIN BRK UNIT - EU

/42.E6 INV/CHR_2_DC+ 120 RED INV/CHR_2_DC+ BAT+/1
120/8
-A64a

/42.E6 INV/CHR_2_DC+ 120 RED INV/CHR_2_DC+ 120/8
BAT+/1
-A64b

120 YELLOW INV/CHR_2_DC- BAT-/1
120/8
-A64c

120 YELLOW INV/CHR_2_DC- 120/8
BAT-/1
-A64d

95 R2 95 KEVI - YELLOW/GREEN INV/CHR_2_PE PE/1
95/8
-A64gnd

INV/CHR_2_DC- /18.D5
INV/CHR_2_DC- /18.D6

-B-B1-22
-B.1 1/1 95/10
XXXXX
MAIN DC NEG. BUSBAR

ZERO EMISSION SYSTEM - USA

-A.174
INVERTER/CHARGER 2
3000VA
12Vdc,120A
120Vac, 50A

DC-CONNECTIONS
BAT+
BAT-
12VDC
120VAC
CASE GROUND
PE(GND)

AC OUT 1
(No connection) L2
L
PE(GND)
N

-A174ac_O1
L/3 AWG6 UL1426 BLACK I/C_OUT1_L /153.E1
PE/3 AWG6 UL1426 GREEN I/C_OUT1_PE /153.E1
N/3 AWG6 UL1426 WHITE I/C_OUT1_N /153.E1
TO ZERO EM INV/CHR AC MAIN BRK UNIT - USA

AC OUT 2
(No connection) L2
L
PE(GND)
N

-A174ac_O2
L/3 AWG10 UL1426 BLACK I/C_OUT2_L /154.E1
PE/3 AWG10 UL1426 GREEN I/C_OUT2_PE /154.E1
N/3 AWG10 UL1426 WHITE I/C_OUT2_N /154.E1
TO ZERO EM INV/CHR AC MAIN BRK UNIT - USA

AC IN
(No connection) L2
L
PE(GND)
N

-A174ac_IN
L/3 AWG10 UL1426 BLACK SH1_SHIP_L /148.C8
PE/3 AWG10 UL1426 GREEN SH1_SHIP_PE /148.D8
N/3 AWG10 UL1426 WHITE SH1_SHIP_N /148.D8
FROM
ZERO EM INV/CHR AC MAIN BRK UNIT - USA

7.6.2024	TuM	C3: 2004998; BMS UPDATE, INV/CHR NEG TO LYNX.	Date	30.10.2023	NAVIX	Axopar			
24.3.2023	TuM	A1: 2004274; USA SYSTEM ADDED.	Drawing by	TuM		Boat	Sub-product code	Product code	Project ID
6.7.2023	TuM	B2: 2004274; AC_OUT1 WIRE SIZES MODIFIED.	Sheet rev.	3		45	DC: ZERO EM. INVERTER CHARGER 2 - DIAGRAM		
Date of modification	Modified by	Description	Project rev.	C	Copyright by	Boat model	Title	Loc	Sheet
								HL	45 / 444

NOT DEFINED

Date of modification	Modified by	Description		
30.10.2023	PF	C3: 2004890; NOT MODIFIED	Date	30.10.2023
24.3.2023	TuM	A1: 2004274; NOT MODIFIED.	Drawing by	TuM
30.3.2023	TuM	B2: 2004274; NOT MODIFIED.	Sheet rev.	3
			Project rev.	C

Copyright by

NAVIX

Boat	Sub-product code	Product code	Project ID	
Axopar				
Boat model	Title		HL	Sheet
45	DC: SOLAR CHARGING SYSTEM - DIAGRAM		Loc	46 / 444

DC DEVICES

Date of modification	Modified by	Description		
30.10.2023	PF	C3: 2004890; NOT MODIFIED	Date	30.10.2023
24.3.2023	TuM	A1: 2004274; NOT MODIFIED.	Drawing by	TuM
30.3.2023	TuM	B2: 2004274; NOT MODIFIED.	Sheet rev.	3
			Project rev.	C

Copyright by

NAVIX

Boat	Sub-product code	Product code	Project ID
Axopar			
Boat model	Title	HL	Sheet
45	------ DC DEVICES ------	Loc	47 / 444

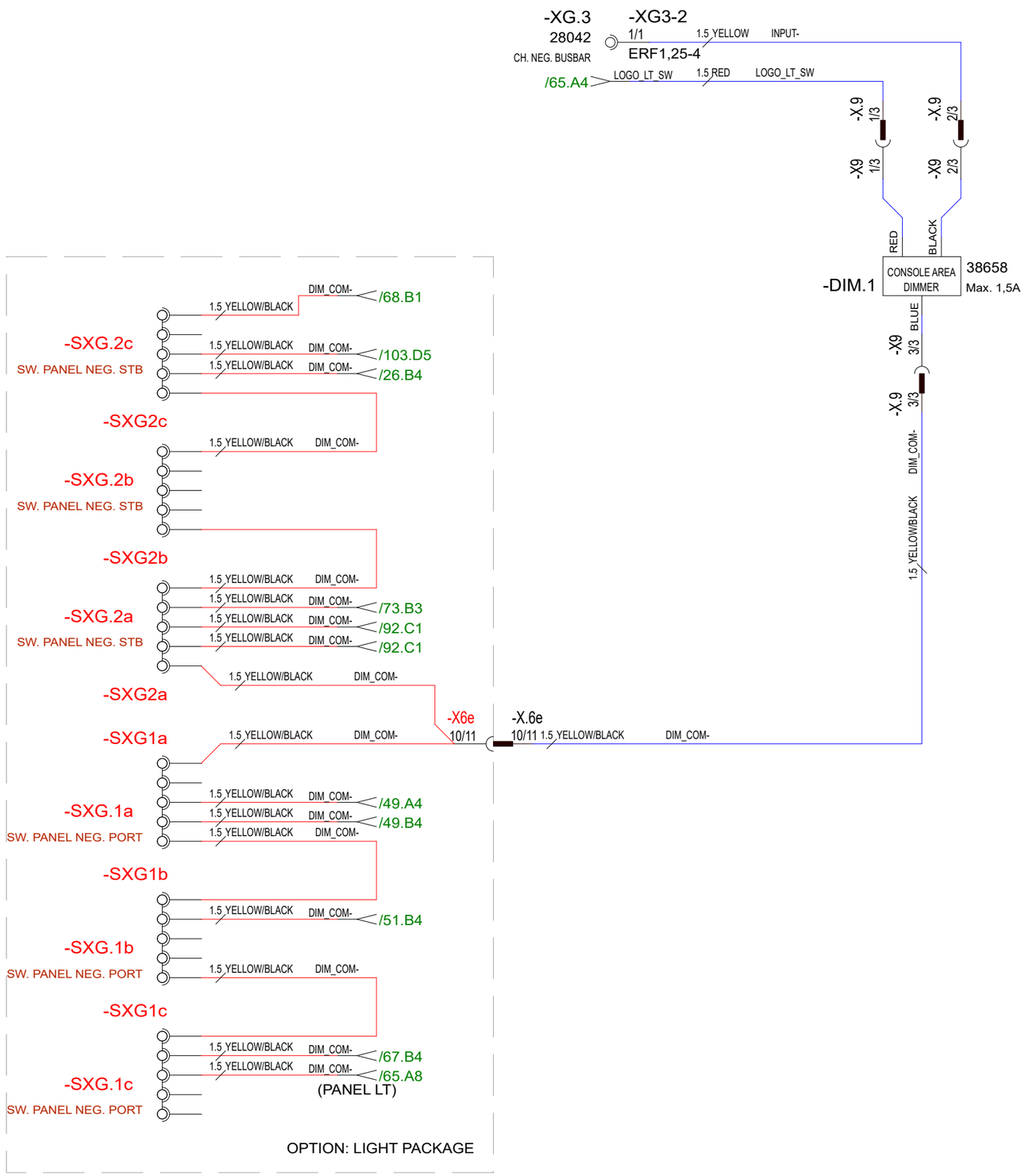

Date of modification	Modified by	Description
28.5.2024	TuM	C3: 2005065; BASIC LT & LIGHT PACKAGE SYSTEM SEPARATED.
24.3.2023	TuM	A1: 2004274; NOT MODIFIED.
30.3.2023	TuM	B2: 2004274; DIMMER & NEG CONNECTIONS ADDED.

Date	30.10.2023
Drawing by	TuM
Sheet rev.	3
Project rev.	C

Copyright by

Axopar			
Boat	Sub-product code	Product code	Project ID
45	DC: SWITCH PANEL NEG/ DIMMER - DIAGRAM	HL	48 / 444
Boat model	Title	Loc	Sheet

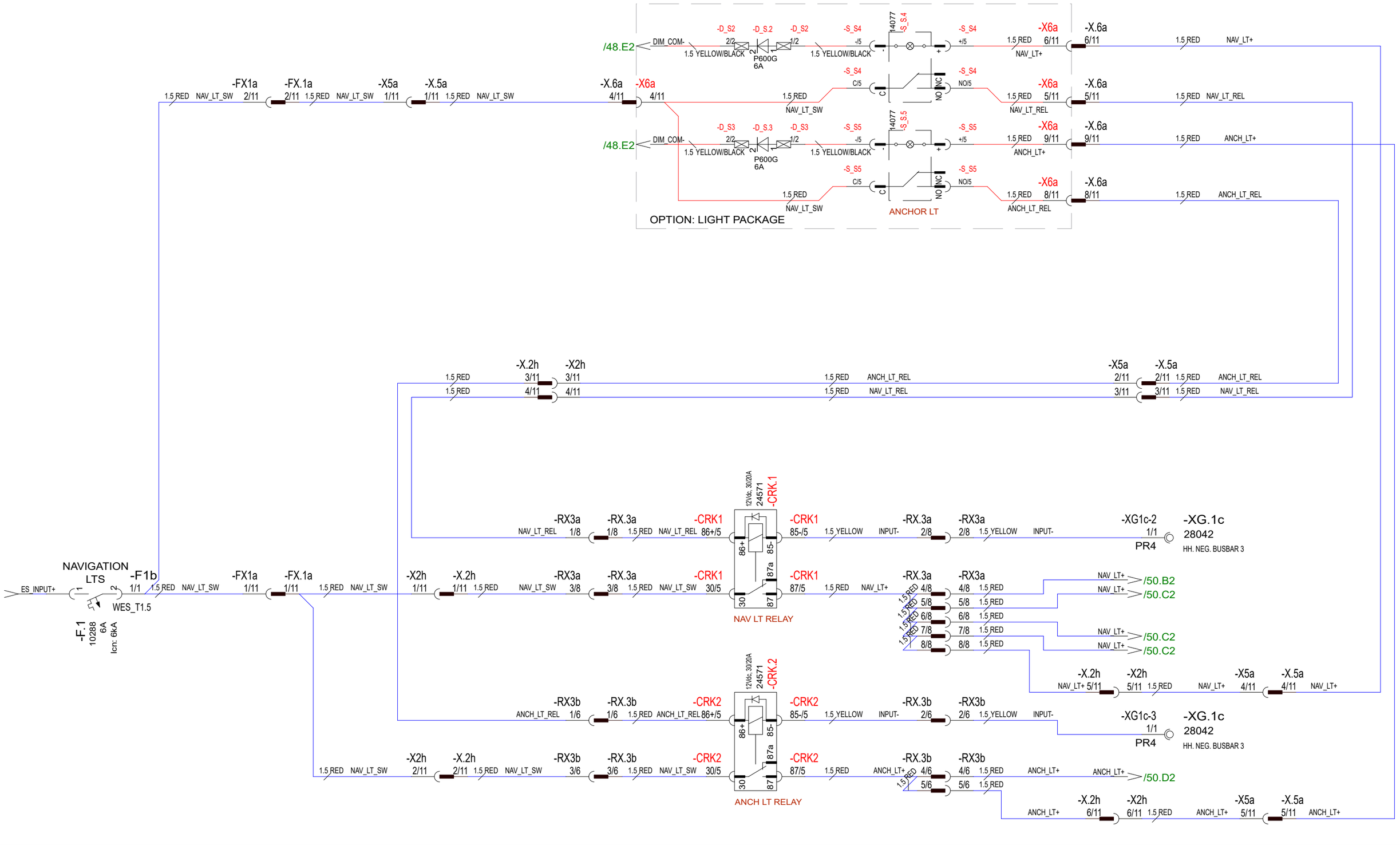

28.5.2024	TuM	C3: 2005065; SWITCHES/ RELAYS RENAMED, LIGHT PACKAGE ADDED.	Date	30.10.2023	NAVIX	Axopar			
24.3.2023	TuM	A1: 2004274; NOT MODIFIED.	Drawing by	TuM		Boat	Sub-product code	Product code	Project ID
30.3.2023	TuM	B2: 2004274; HARNESS CONNECTIONS ADDED, DIODE REMOVED.	Sheet rev.	3		45	DC: NAVIGATION LT - DIAGRAM	HL	49 / 444
Date of modification	Modified by	Description	Project rev.	C	Copyright by	Boat model	Title	Loc	Sheet

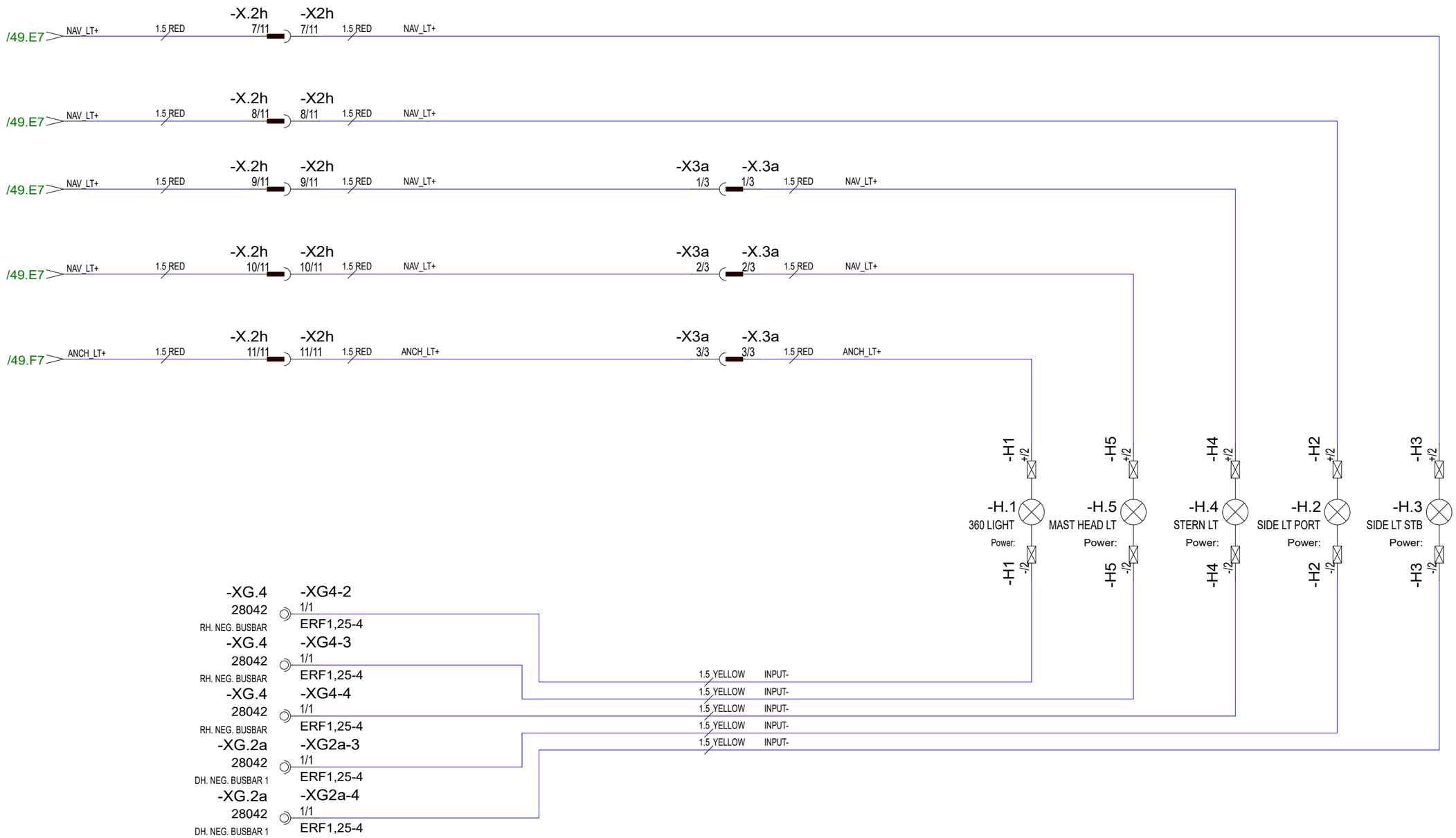

Date of modification	Modified by	Description						
28.5.2024	TuM	C3: 2004890, 2005065; NOT MODIFIED.	Date	30.10.2023	NAVIX	Axopar		
24.3.2023	TuM	A1: 2004274; NOT MODIFIED.	Drawing by	TuM		Boat	Sub-product code	Product code / Project ID
30.3.2023	TuM	B2: 2004274; HARNESS CONNECTIONS ADDED, DIODE REMOVED.	Sheet rev.	3		45	DC: NAVIGATION LT - DIAGRAM	HL
			Project rev.	C	Copyright by	Boat model	Title	Loc / 50 / 444 Sheet

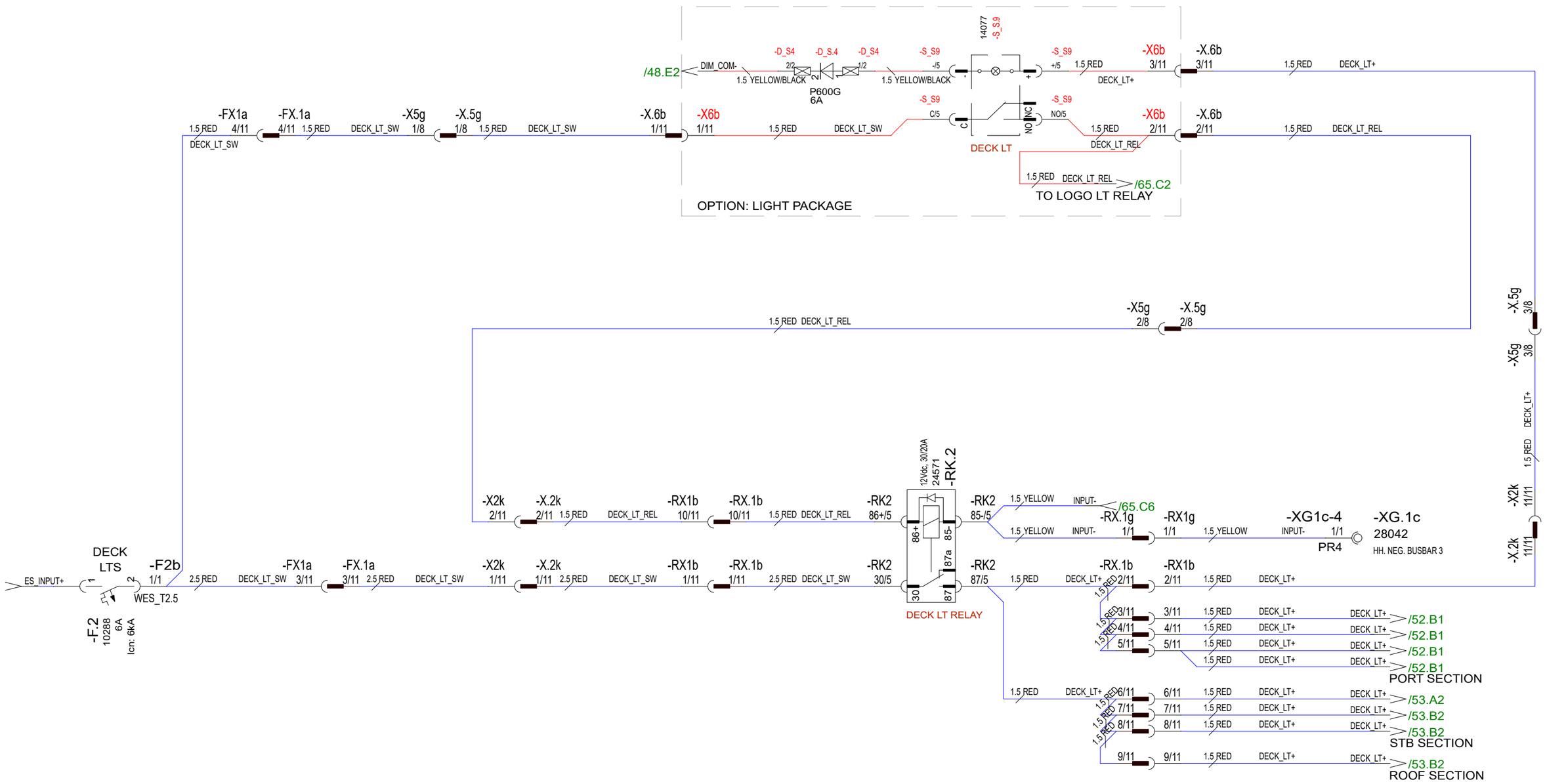

28.5.2024	TuM	C3: 2005065; SWITCHES RENAMED, LIGHT PACKAGE ADDED.	Date	30.10.2023	NAVIX	Axopar			
24.3.2023	TuM	A1: 2004274; NOT MODIFIED.	Drawing by	TuM		Boat	Sub-product code	Product code	Project ID
30.3.2023	TuM	B2: 2004274; HARNESS CONNECTIONS ADDED.	Sheet rev.	3		45	DC: DECK LTS - DIAGRAM	HL	51/ 444
Date of modification	Modified by	Description	Project rev.	C	Copyright by	Boat model	Title	Loc	Sheet

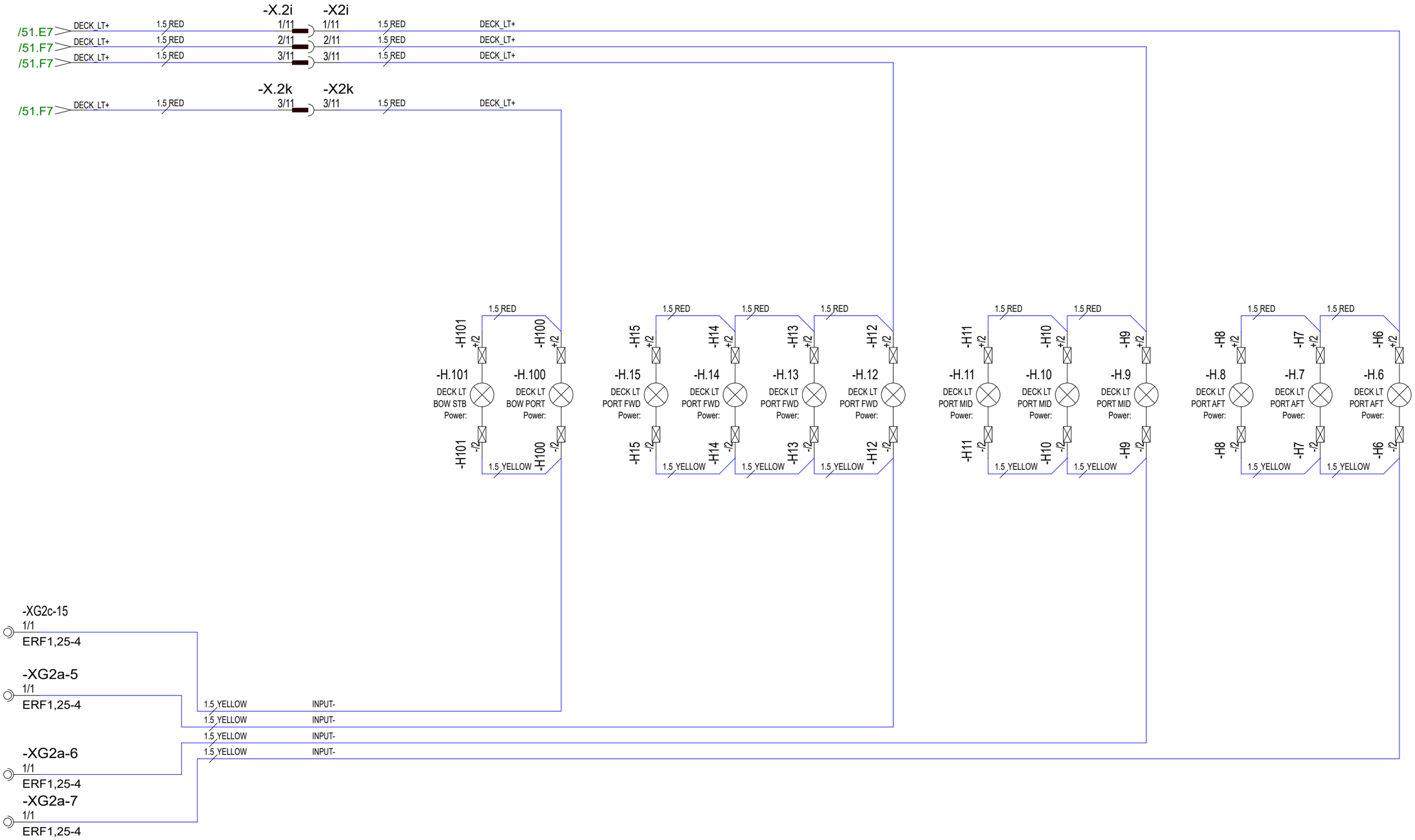

28.5.2024	TuM	C3: 2004890, 2005065; NOT MODIFIED	Date	30.10.2023	NAVIX	Axopar			
24.3.2023	TuM	A1: 2004274; NOT MODIFIED.	Drawing by	TuM		Boat	Sub-product code	Product code	Project ID
30.3.2023	TuM	B2: 2004274; HARNESS CONNECTIONS ADDED.	Sheet rev.	3		45	DC: DECK LTS - DIAGRAM	HL	52 / 444
Date of modification	Modified by	Description	Project rev.	C	Copyright by	Boat model	Title	Loc	Sheet

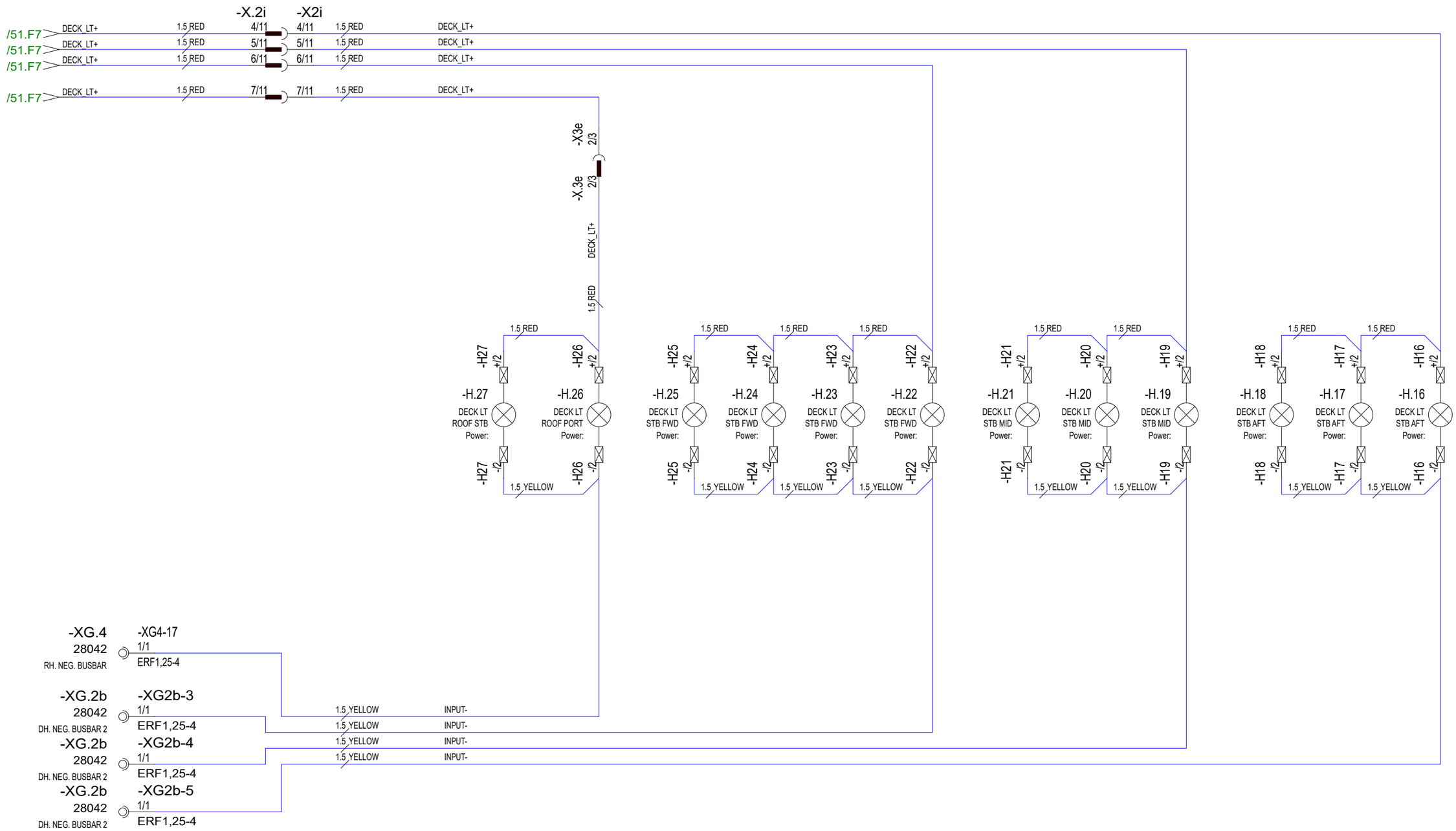

28.5.2024	TuM	C3: 2004890, 2005065; NOT MODIFIED	Date	30.10.2023		Axopar			
24.3.2023	TuM	A1: 2004274; NOT MODIFIED.	Drawing by	TuM					
30.3.2023	TuM	B2: 2004274; HARNESS CONNECTIONS ADDED.	Sheet rev.	3	NAVIX	45	DC: DECK LTS - DIAGRAM	HL	53 / 444
Date of modification	Modified by	Description	Project rev.	C	Copyright by	Boat model	Title	Loc	Sheet

Boat | Sub-product code | Product code | Project ID

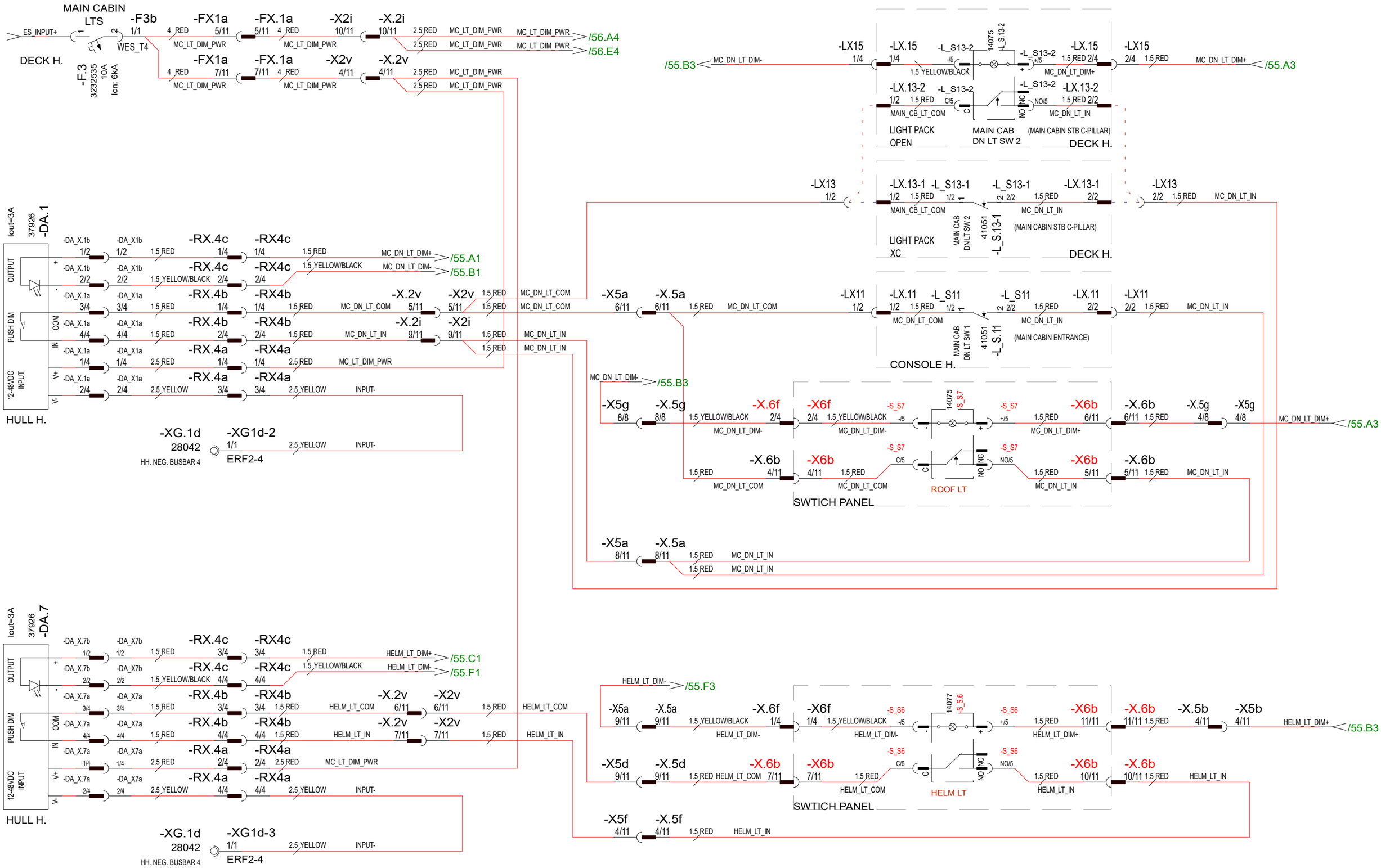

6.6.2024	TuM	C3: 2005065; LIGHTS UPDATED FOR DIMMING SYSTEM.	Date	30.10.2023	NAVIX	Axopar			
24.3.2023	TuM	A1: 2004274; NOT MODIFIED.	Drawing by	TuM		Boat	Sub-product code	Product code	Project ID
30.3.2023	TuM	B2: 2004274; HARNESS CONNECTIONS ADDED.	Sheet rev.	3		45	DC: MAIN CABIN LTS - DIAGRAM	HL	54 / 444
Date of modification	Modified by	Description	Project rev.	C	Copyright by	Boat model	Title	Loc	Sheet

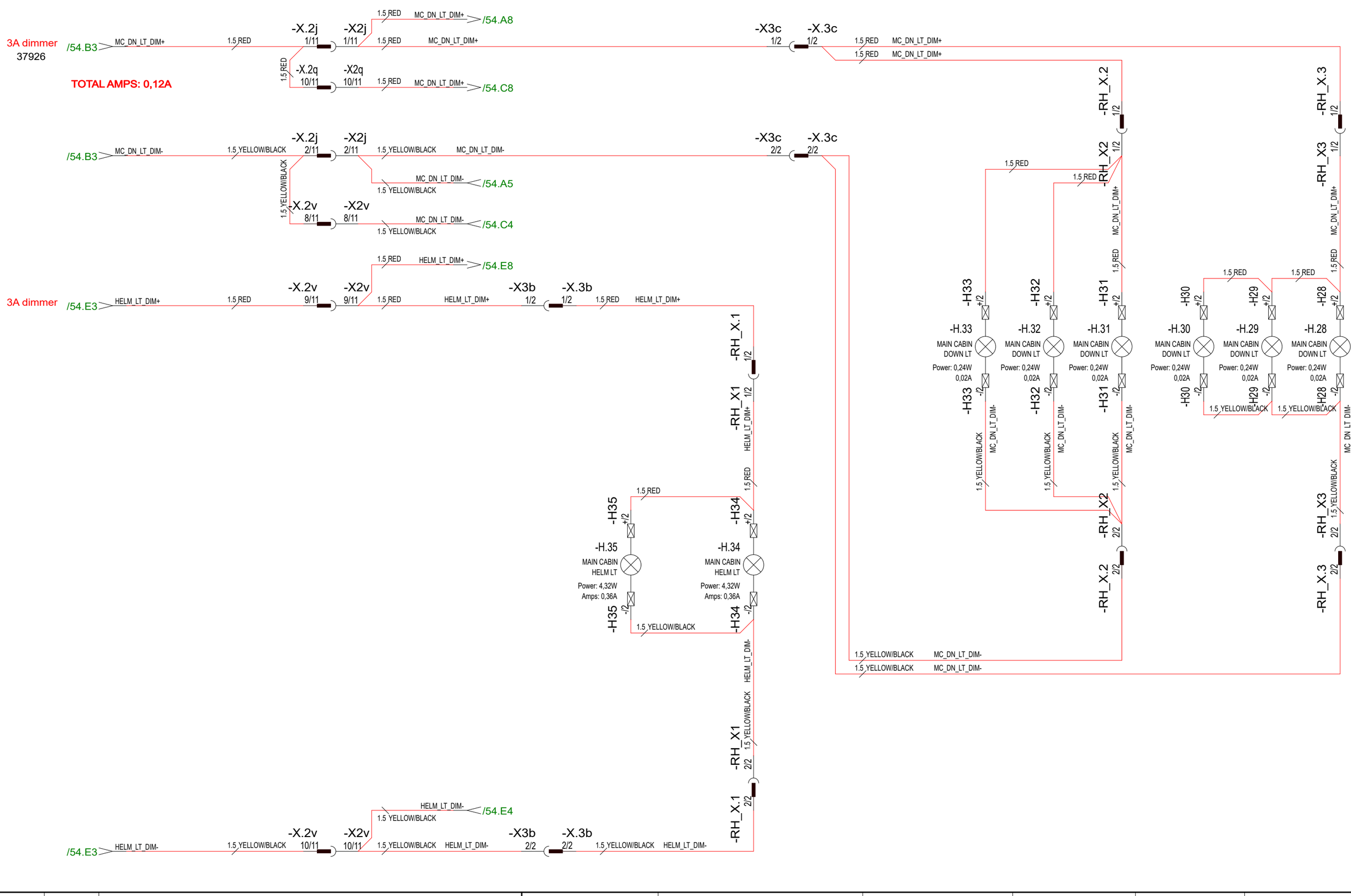

6.6.2024	TuM	C3: 2005065; LIGHTS UPDATED FOR DIMMING SYSTEM.	Date	30.10.2023	NAVIX	Axopar			
24.3.2023	TuM	A1: 2004274; NOT MODIFIED.	Drawing by	TuM		Boat	Sub-product code	Product code	Project ID
19.4.2023	TuM	B2: 2004274; HARNESS CONNECTIONS ADDED.	Sheet rev.	3		45	DC: MAIN CABIN LTS - DIAGRAM	HL	
Date of modification	Modified by	Description	Project rev.	C	Copyright by	Boat model	Title	Loc	55 / 444 Sheet

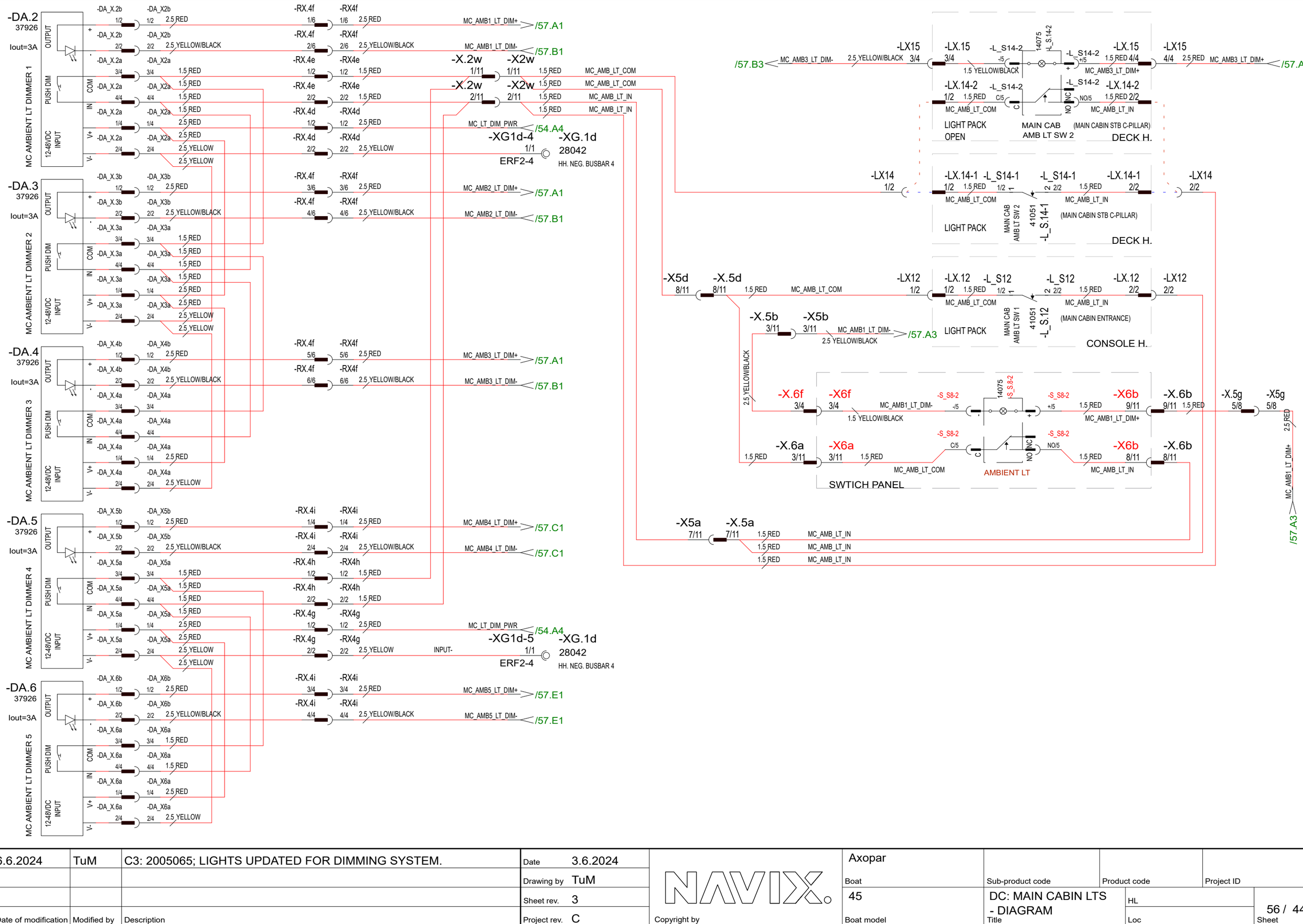

6.6.2024	TuM	C3: 2005065; LIGHTS UPDATED FOR DIMMING SYSTEM.	Date	3.6.2024		Axopar			
			Drawing by	TuM		Boat	Sub-product code	Product code	Project ID
			Sheet rev.	3		45	DC: MAIN CABIN LTS - DIAGRAM	HL	56 / 444
Date of modification	Modified by	Description	Project rev.	C	Copyright by	Boat model	Title	Loc	Sheet

NAVIX.
Copyright by

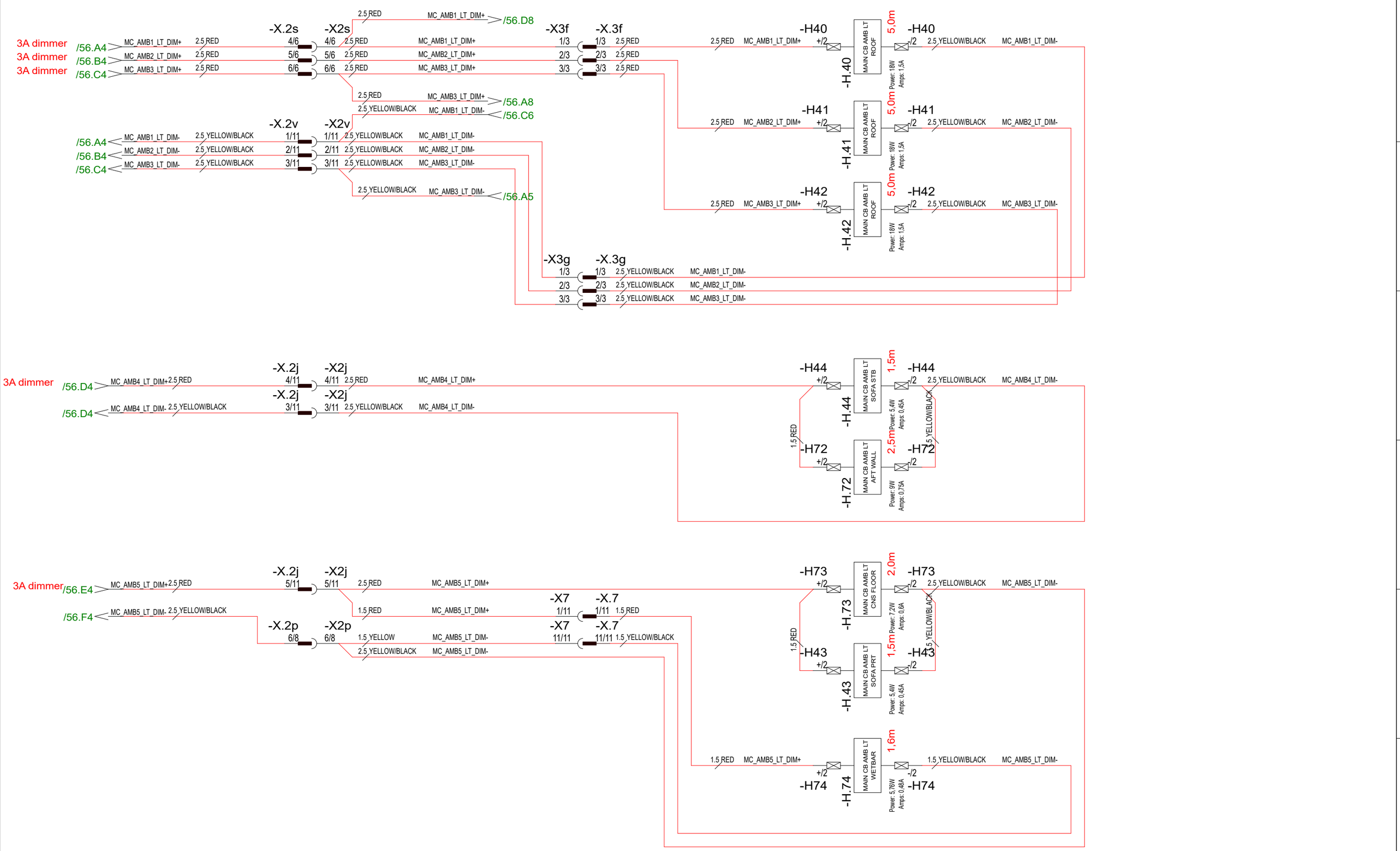

TOTAL AMPS: 7A

6.6.2024	TuM	C3: 2005065; LIGHTS UPDATED FOR DIMMING SYSTEM.	Date	30.10.2023	NAVIX	Axopar		
24.3.2023	TuM	A1: 2004274; NOT MODIFIED.	Drawing by	TuM		Boat	Sub-product code	Product code	Project ID
19.4.2023	TuM	B2: 2004274; HARNESS CONNECTIONS ADDED.	Sheet rev.	3		45	DC: MAIN CABIN LTS - DIAGRAM	HL	57 / 444
Date of modification	Modified by	Description	Project rev.	C	Copyright by	Boat model	Title	Loc	Sheet

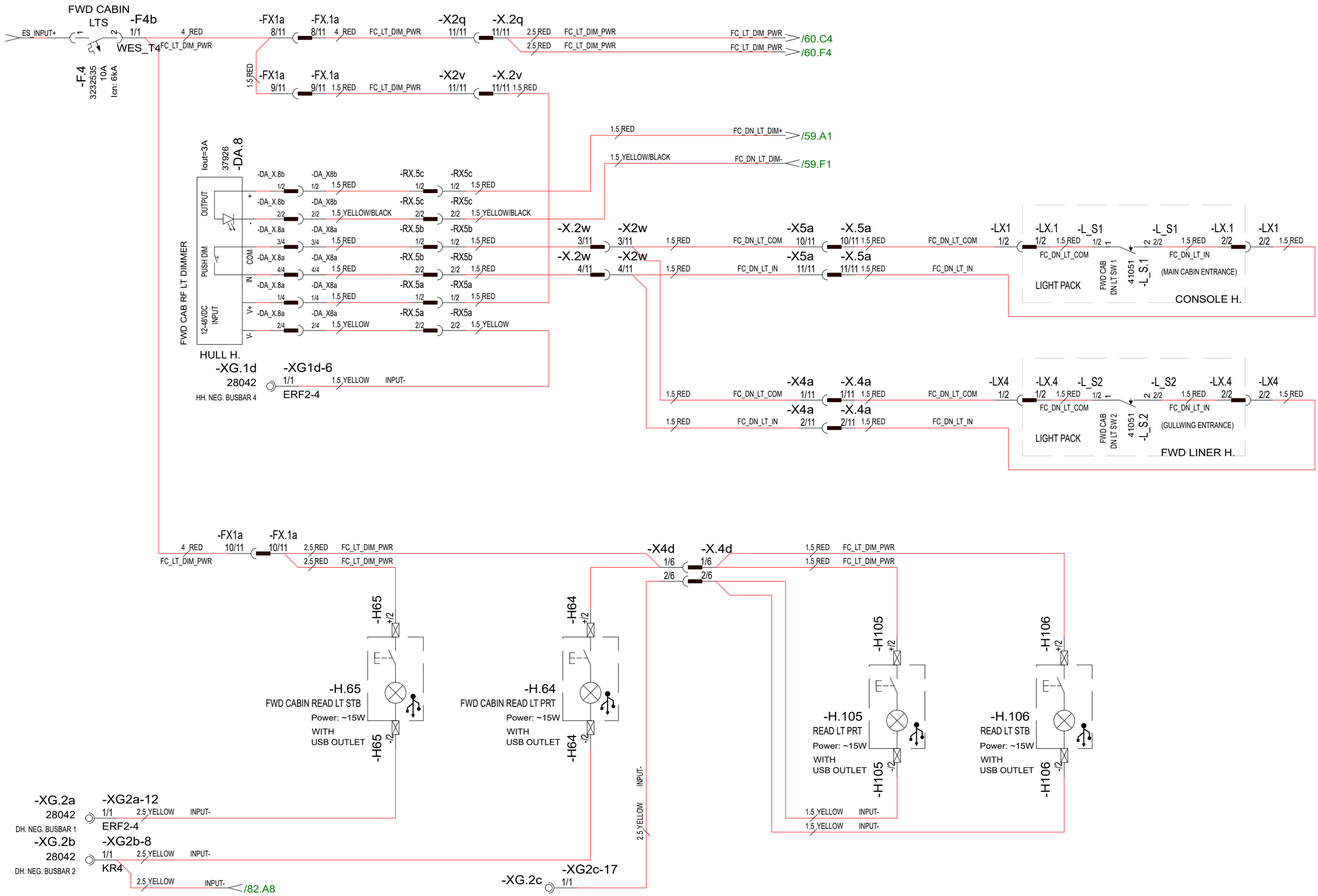

6.6.2024	PF/TuM	C3: 2004890; H105 & H106 added, 2005065; LIGHTS UPDATED FOR DIMMING SYSTEM.	Date	30.10.2023	NAVIX	Axopar			
24.3.2023	TuM	A1: 2004274; NOT MODIFIED.	Drawing by	TuM		Boat	Sub-product code	Product code	Project ID
30.3.2023	TuM	B2: 2004274; HARNESS CONNECTIONS ADDED.	Sheet rev.	3		45	DC: FWD CABIN LTS - DIAGRAM	HL	58 / 444
Date of modification	Modified by	Description	Project rev.	C	Copyright by	Boat model	Title	Loc	Sheet

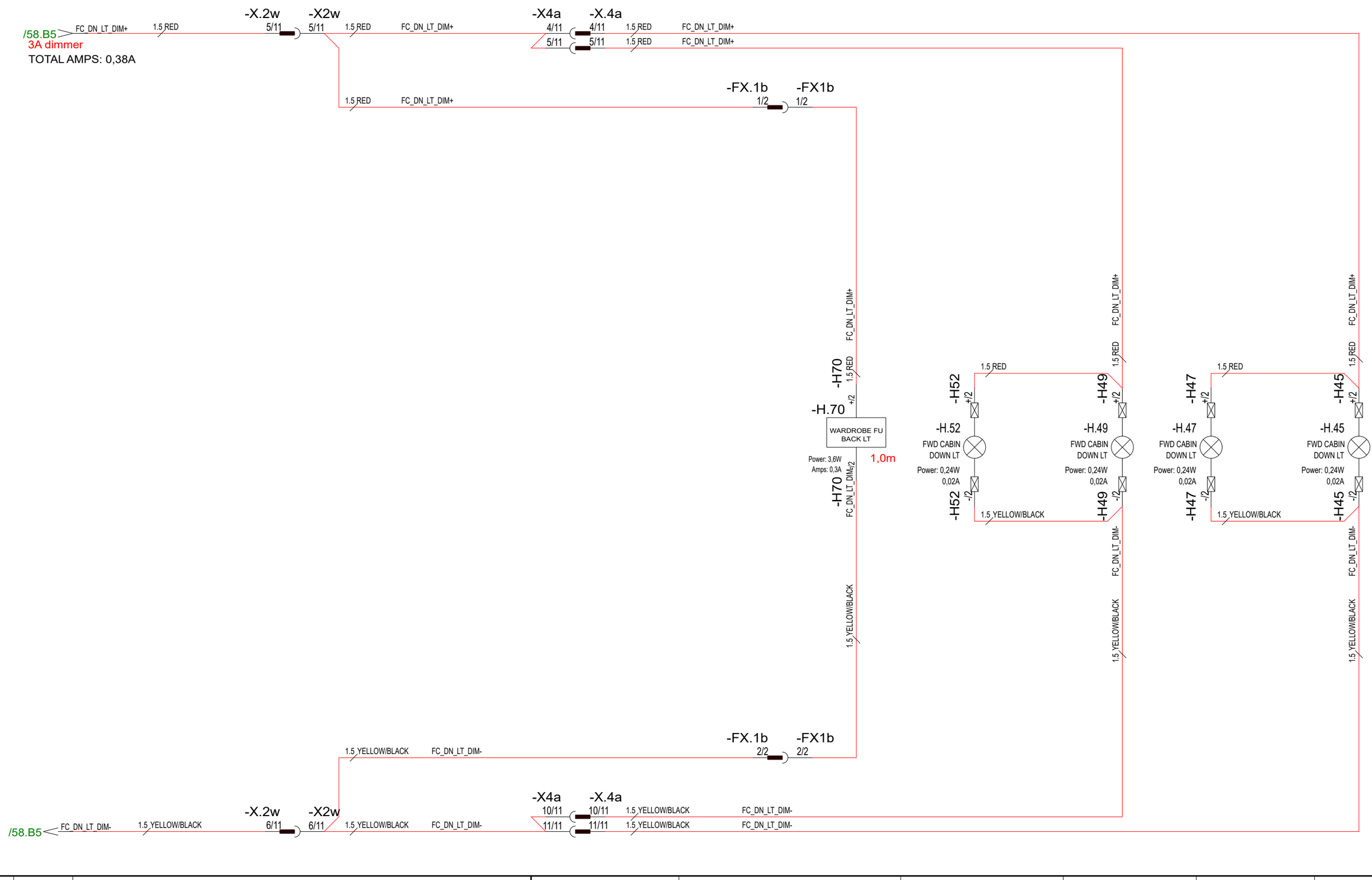

30.10.2023	PF/TuM	C3: 2004890; Removed H46, H48, H50, H51, 2005065; LIGHTS UPDATED FOR DIMMING SYSTEM.	Date	30.10.2023	NAVIX	Axopar			
24.3.2023	TuM	A1: 2004274; NOT MODIFIED.	Drawing by	TuM		Boat	Sub-product code	Product code	Project ID
20.4.2023	TuM	B2: 2004274; HARNESS CONNECTIONS ADDED.	Sheet rev.	3		45	DC: FWD CABIN LTS - DIAGRAM	HL	59 / 444
Date of modification	Modified by	Description	Project rev.	C	Copyright by	Boat model	Title	Loc	Sheet

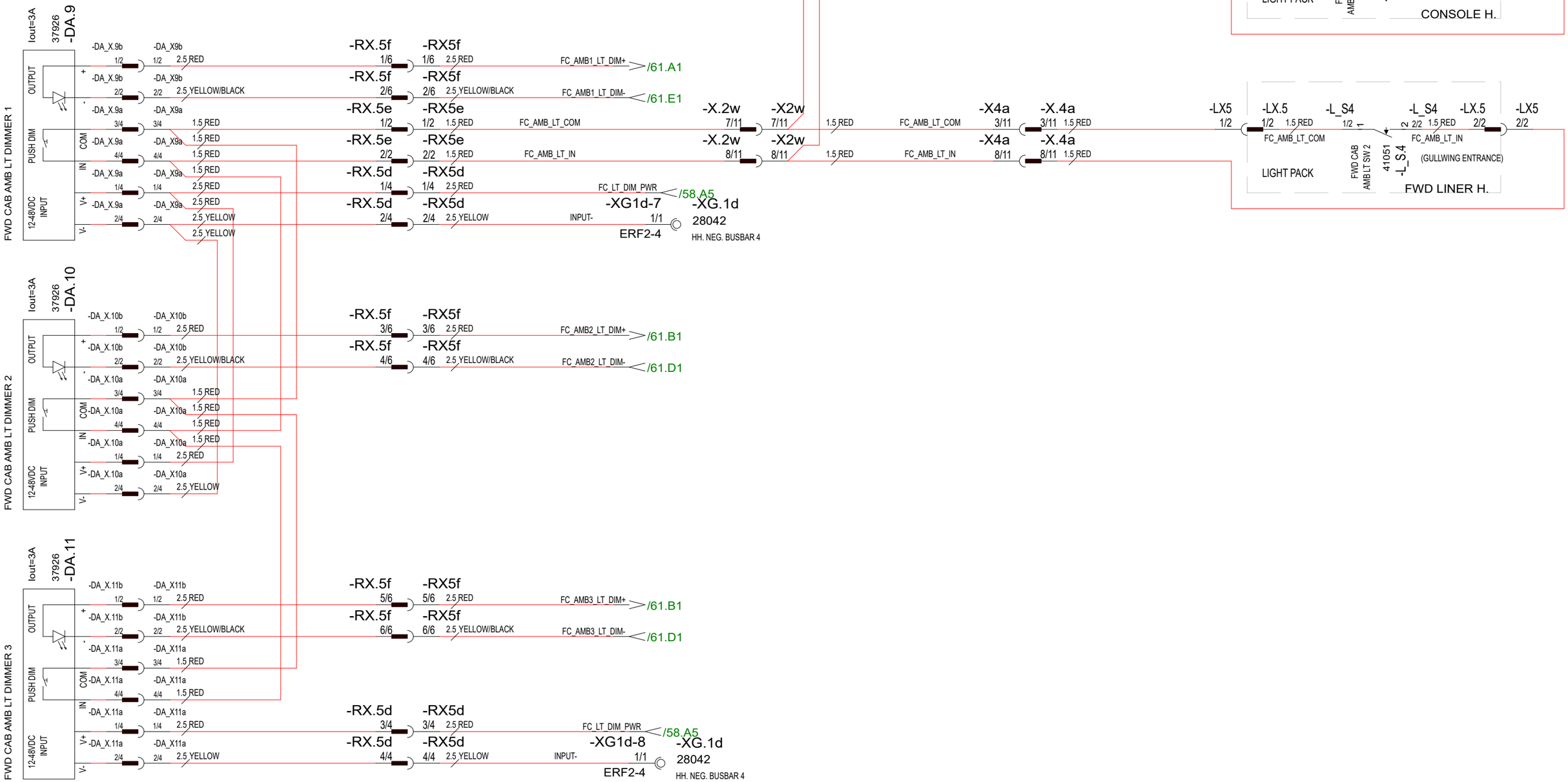

7.6.2024	TuM	C3: 2005065; LIGHTS UPDATED FOR DIMMING SYSTEM.	Date	7.6.2024	NAVIX.	Axopar			
			Drawing by	TuM		Boat	Sub-product code	Product code	Project ID
			Sheet rev.	3		45	DC: FWD CABIN LTS - DIAGRAM	HL	60 / 444
Date of modification	Modified by	Description	Project rev.	C	Copyright by	Boat model	Title	Loc	Sheet

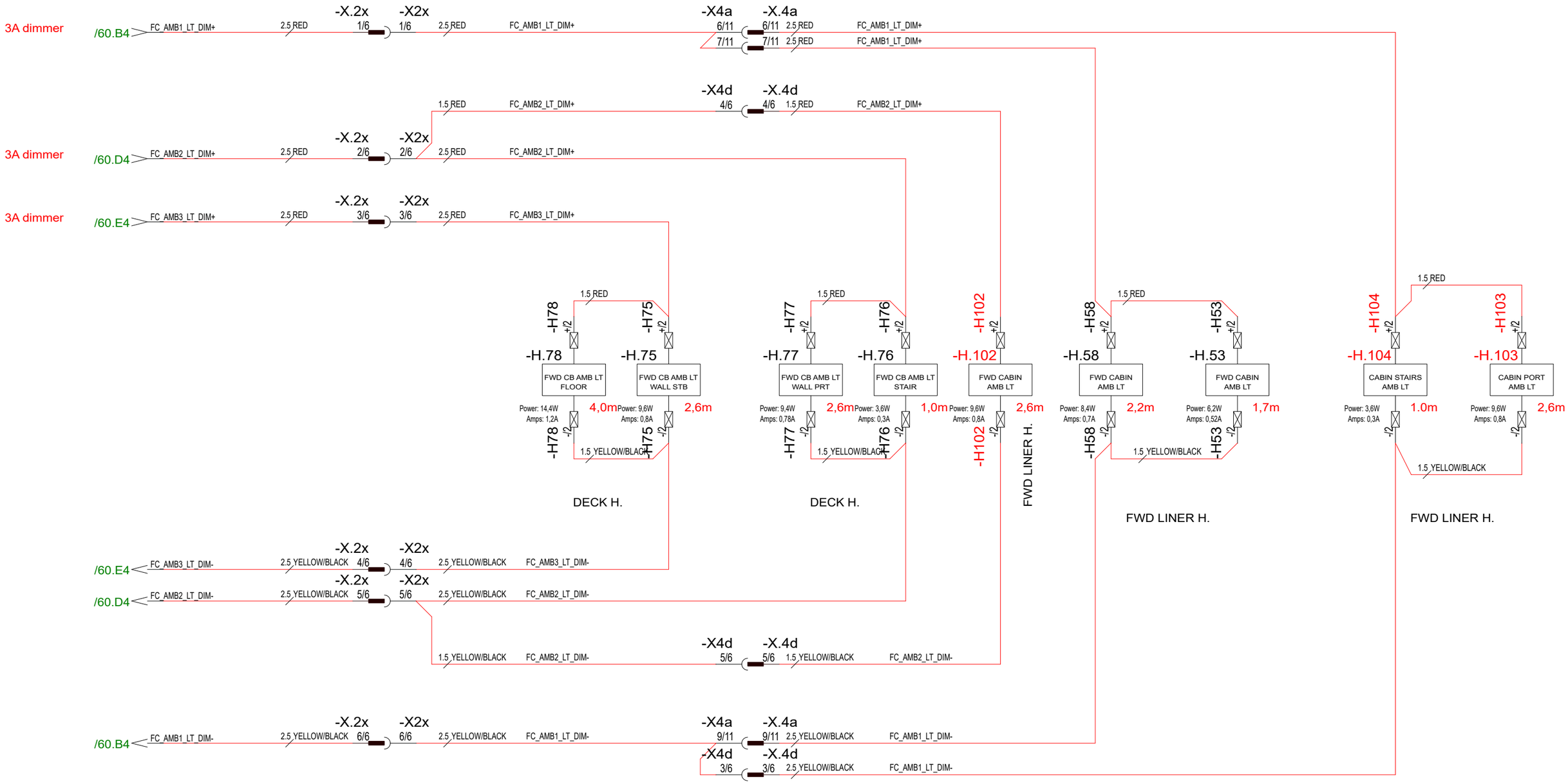

TOTAL LOAD: 6A

Date of modification	Modified by	Description
7.6.2024	TuM	C3: 2005065; LIGHTS UPDATED FOR DIMMING SYSTEM.
24.3.2023	TuM	A1: 2004274; NOT MODIFIED.
20.4.2023	TuM	B2: 2004274; HARNESS CONNECTIONS ADDED.

Date	30.10.2023
Drawing by	TuM
Sheet rev.	3
Project rev.	C

Copyright by NAVIX

Boat	Sub-product code	Product code	Project ID
Axopar			
Boat model	**Title**	**Loc**	**Sheet**
45	DC: FWD CABIN LTS - DIAGRAM	HL	61/ 444

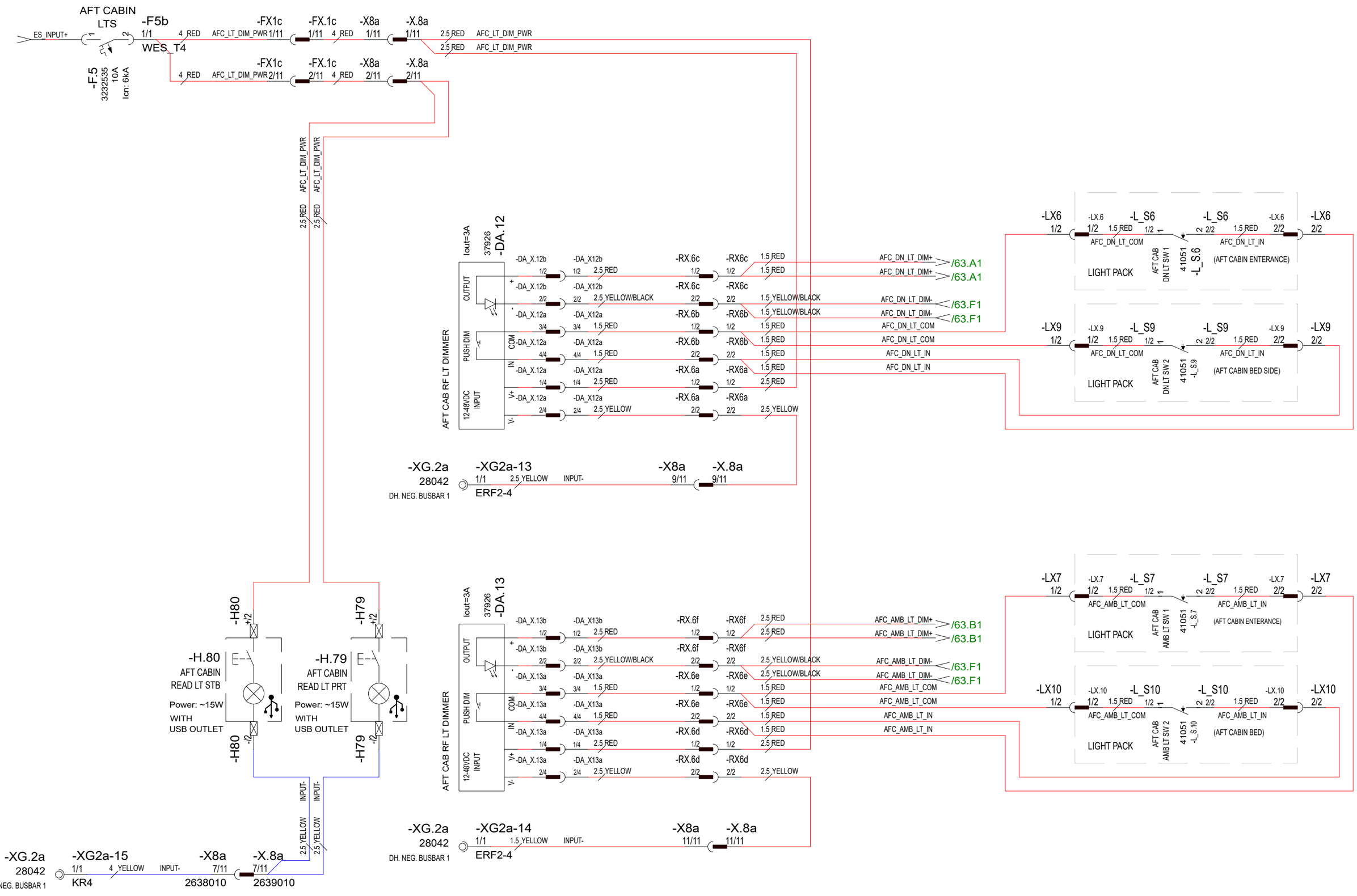

Date of modification	Modified by	Description					
7.6.2024	TuM	C3: 2005065; AFT CAB BED LT SW ADDED, LIGHTS UPDATED FOR DIMMING SYSTEM.	Date	30.10.2023	NAVIX Copyright by	Axopar Boat	Sub-product code / Product code / Project ID
24.3.2023	TuM	A1: 2004274; NOT MODIFIED.	Drawing by	TuM		45 Boat model	DC: AFT CABIN LTS - DIAGRAM Title
30.3.2023	TuM	B2: 2004274; AFT CABIN LIGHTS ADDED.	Sheet rev.	3			HL Loc
			Project rev.	C			62 / 444 Sheet

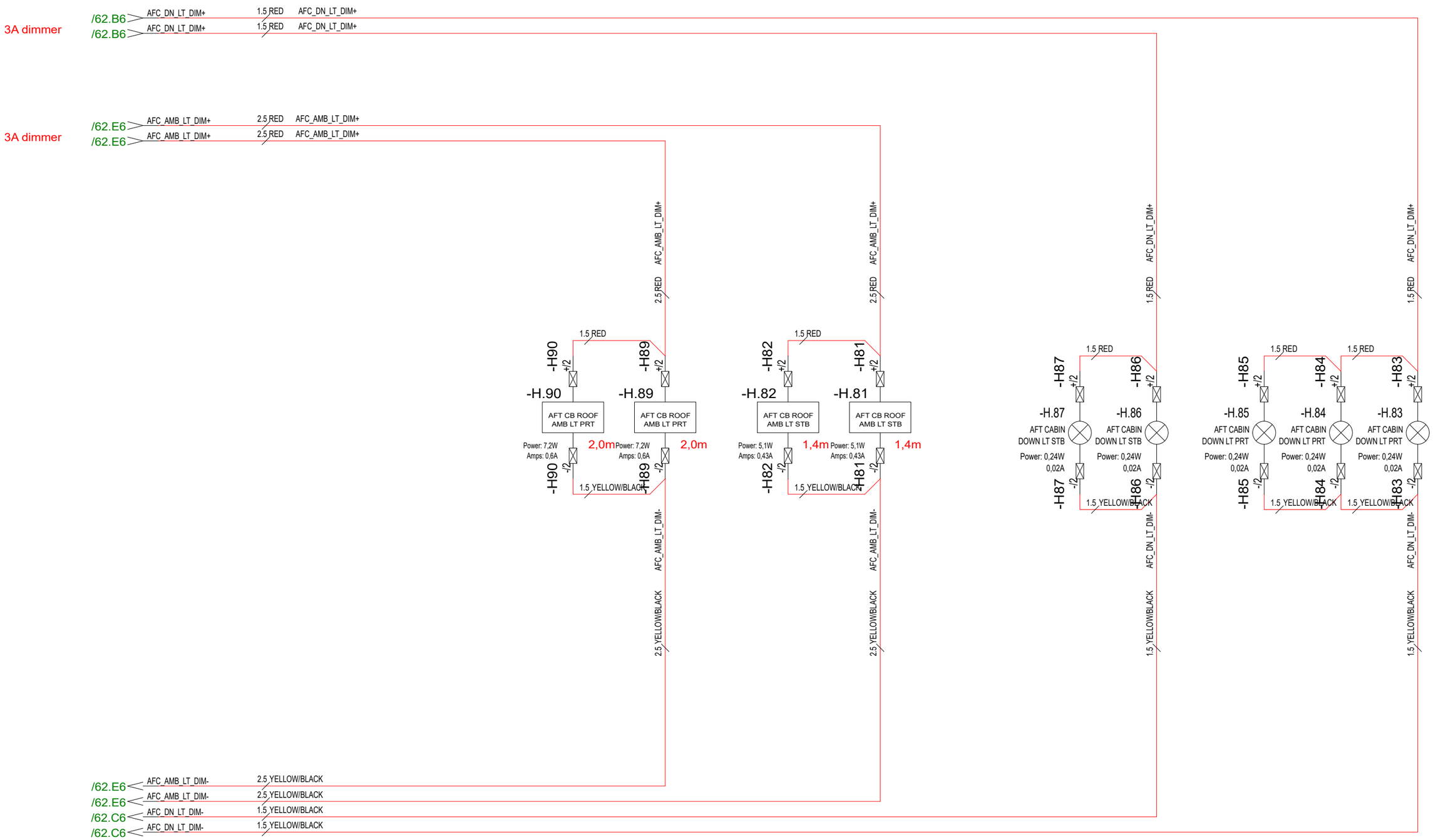

TOTAL LOAD: 2A

Date of modification	Modified by	Description
7.6.2024	TuM	C3: 2005065; LIGHTS UPDATED FOR DIMMING SYSTEM.
24.3.2023	TuM	A1: 2004274; NOT MODIFIED.
21.4.2023	TuM	B2: 2004274; AFT CABIN LIGHTS ADDED.

Date	30.10.2023
Drawing by	TuM
Sheet rev.	3
Project rev.	C

Copyright by NAVIX

Axopar			
Boat	Sub-product code	Product code	Project ID
45	DC: AFT CABIN LTS - DIAGRAM	HL	63 / 444
Boat model	Title	Loc	Sheet

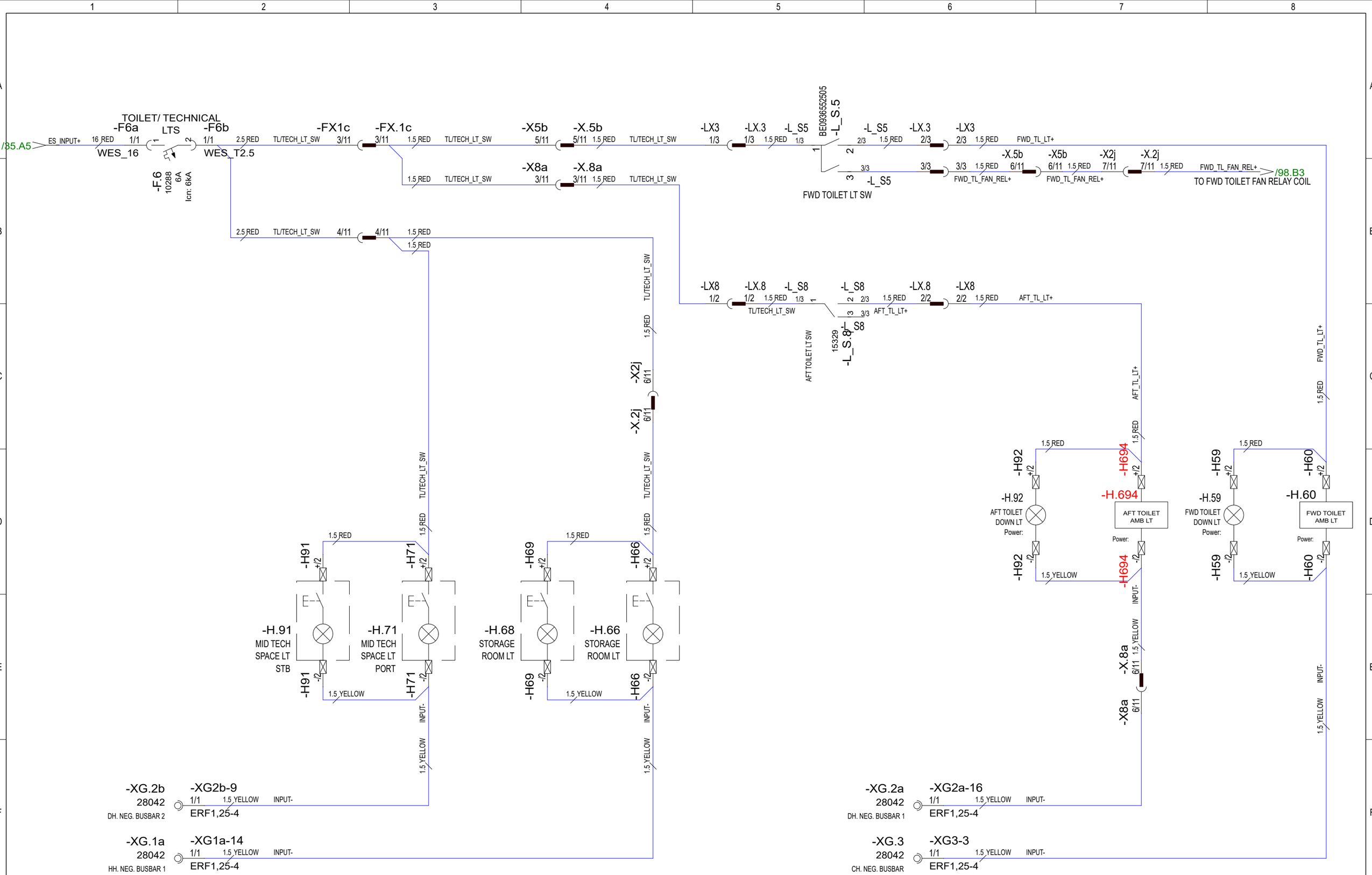

29.5.2024	TuM	C3: 2005065; AFT TOILET AMB LT ADDED.	Date	30.10.2023	NAVIX	Axopar			
24.3.2023	TuM	A1: 2004274; NOT MODIFIED.	Drawing by	TuM		Boat	Sub-product code	Product code	Project ID
30.3.2023	TuM	B2: 2004274; HARNESS CONN. & AFT TOILET ADDED, TECH LTS TYPE CHANGED.	Sheet rev.	3		45	DC: TOILET/ TECHNICAL LTS - DIAGRAM	HL	64 / 444
Date of modification	Modified by	Description	Project rev.	C	Copyright by	Boat model	Title	Loc	Sheet

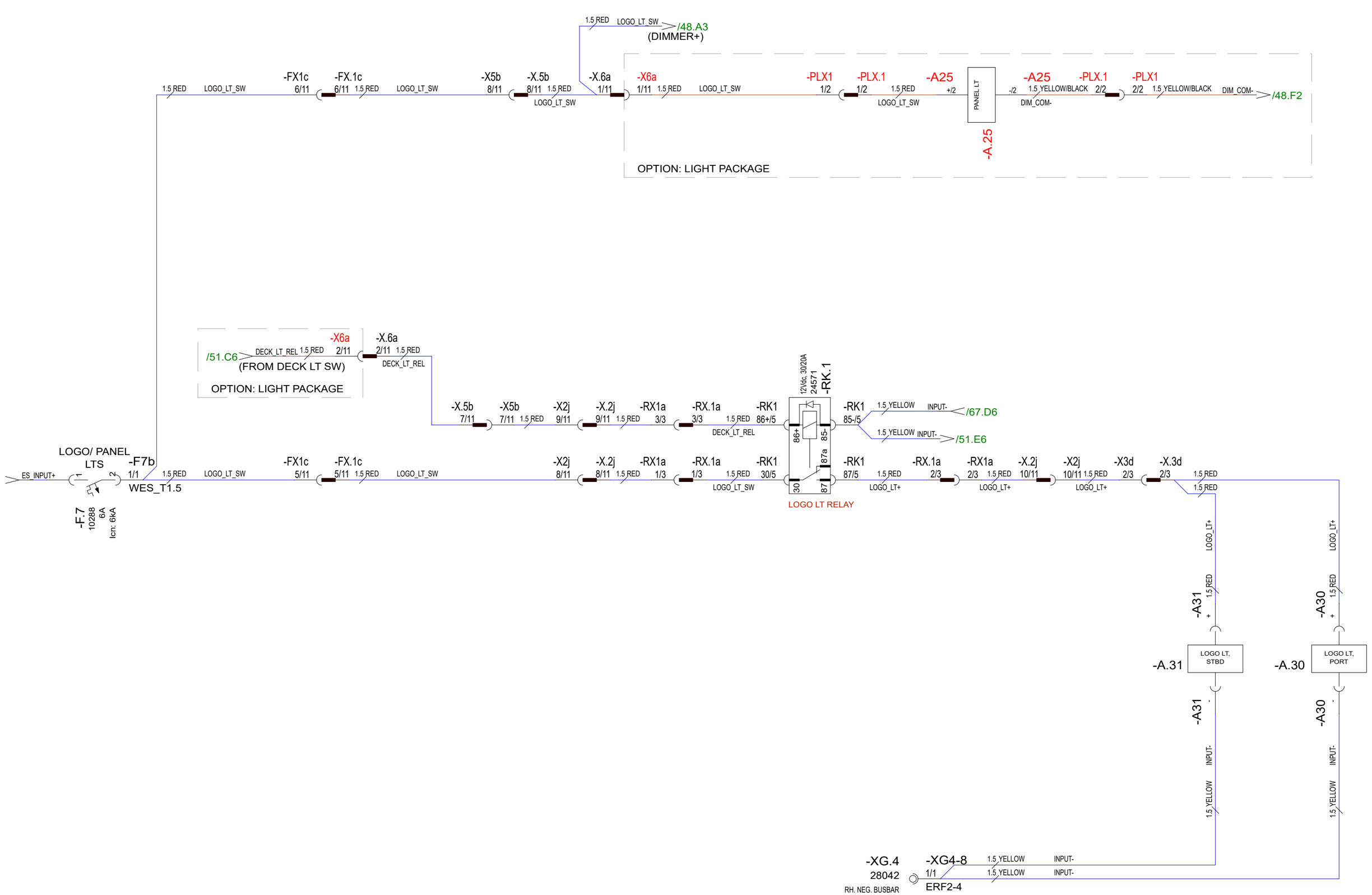

28.5.2024	TuM	C3: 2005065; LIGHT PACKAGE ADDED.	Date	30.10.2023	NAVIX	Axopar			
24.3.2023	TuM	A1: 2004274; NOT MODIFIED.	Drawing by	TuM		Boat	Sub-product code	Product code	Project ID
30.3.2023	TuM	B2: 2004274; HARNESS CONNECTIONS ADDED.	Sheet rev.	3		45	DC: LOGO/PANEL LT - DIAGRAM	HL	65 / 444
Date of modification	Modified by	Description	Project rev.	C	Copyright by	Boat model	Title	Loc	Sheet

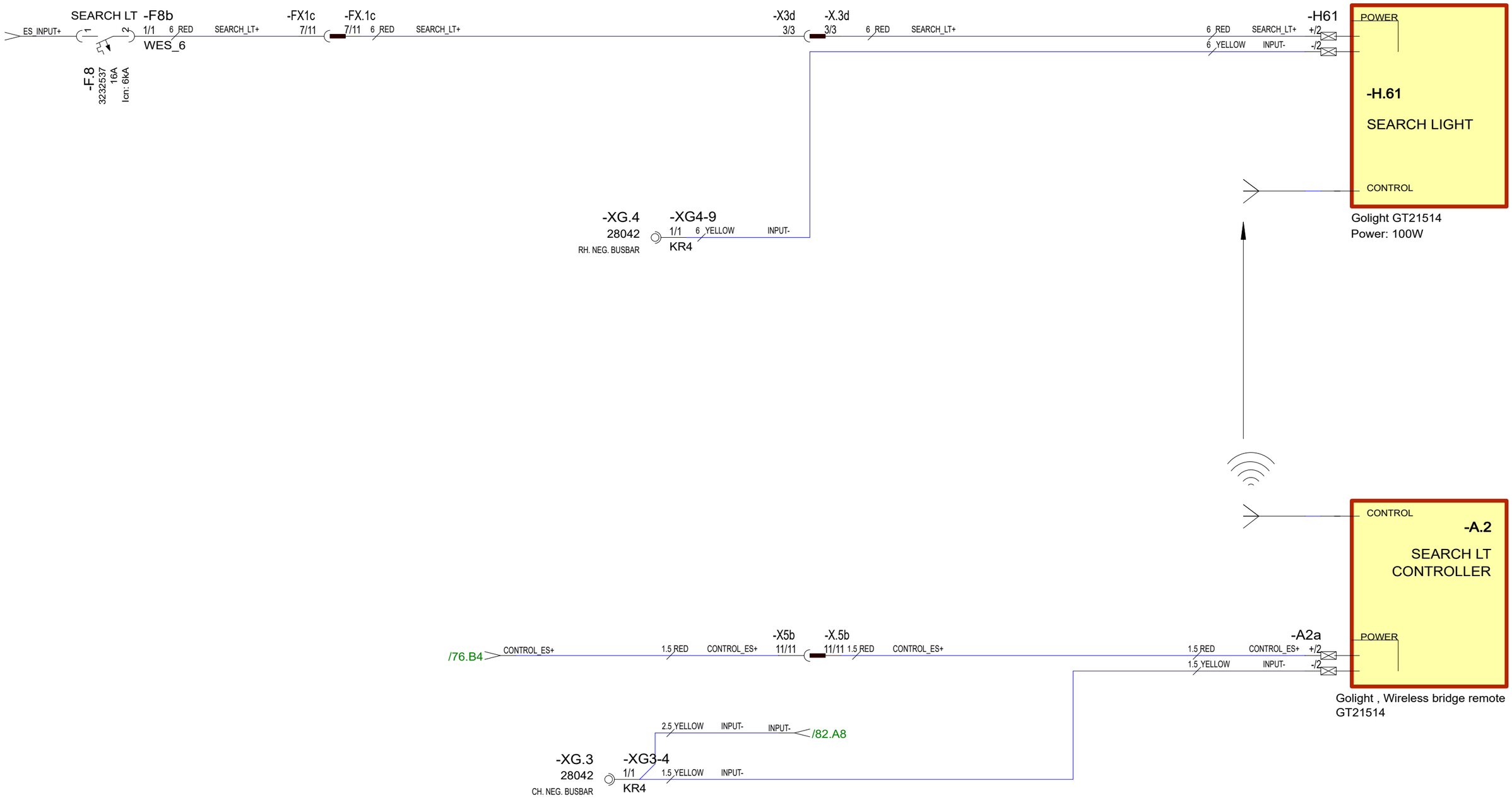

30.10.2023	PF	C3: 2004890; NOT MODIFIED	Date	30.10.2023	NAVIX	Axopar			
24.3.2023	TuM	A1: 2004274; NOT MODIFIED.	Drawing by	TuM		Boat	Sub-product code	Product code	Project ID
30.3.2023	TuM	B2: 2004274; HARNESS CONNECTIONS ADDED.	Sheet rev.	3		45	DC: SEARCH LT - DIAGRAM	HL	66 / 444
Date of modification	Modified by	Description	Project rev.	C	Copyright by	Boat model	Title	Loc	Sheet

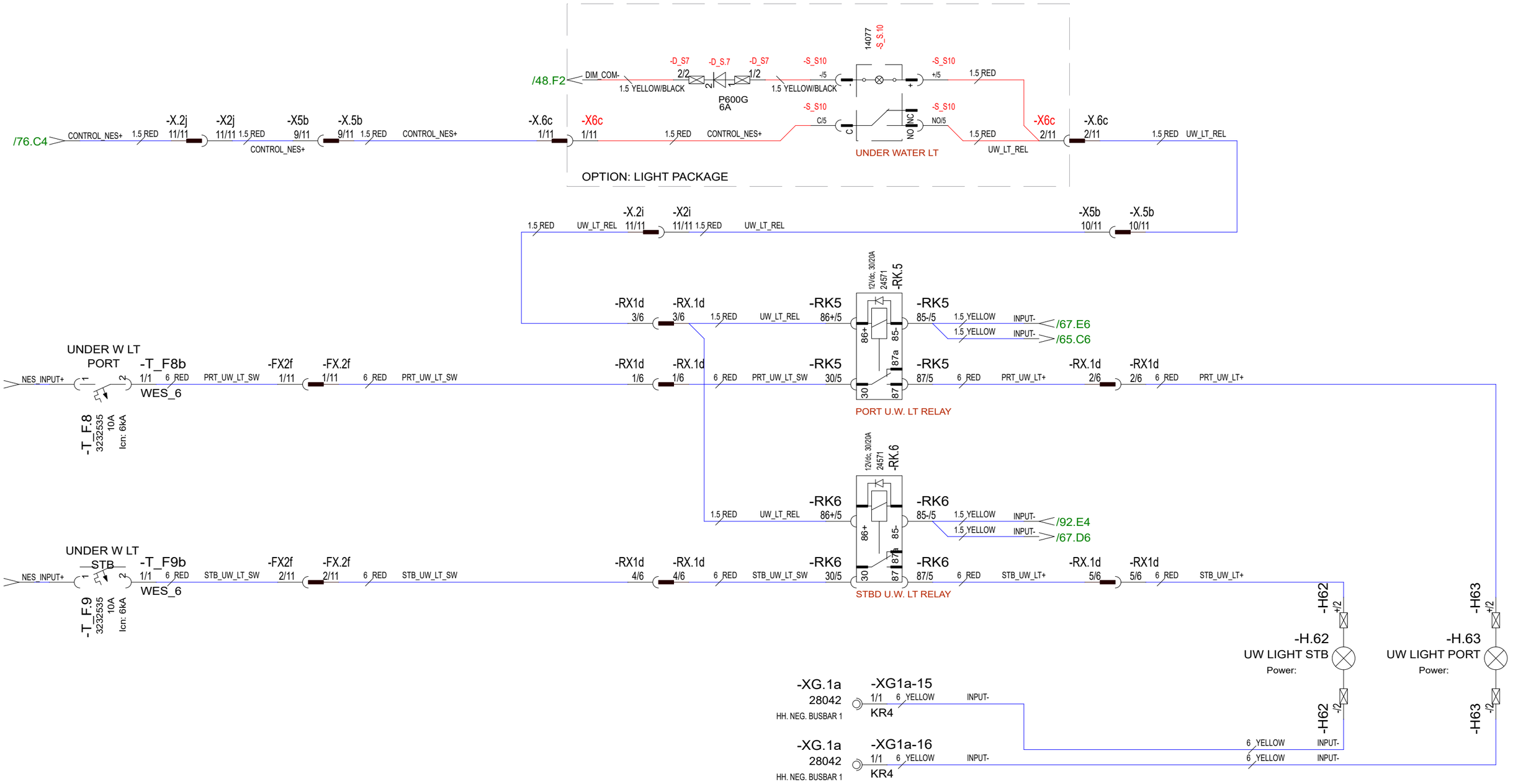

Date of modification	Modified by	Description
28.5.2024	TuM	C3: 2005065; SWITCHES RENAMED, LIGHT PACKAGE ADDED.
24.3.2023	TuM	A1: 2004274; NOT MODIFIED.
30.3.2023	TuM	B2: 2004274; HARNESS CONNECTIONS ADDED.

Date	30.10.2023
Drawing by	TuM
Sheet rev.	3
Project rev.	C

Copyright by

Axopar			
Boat	Sub-product code	Product code	Project ID
45	DC: UNDER WATER LT - DIAGRAM	HL	67 / 444
Boat model	Title	Loc	Sheet

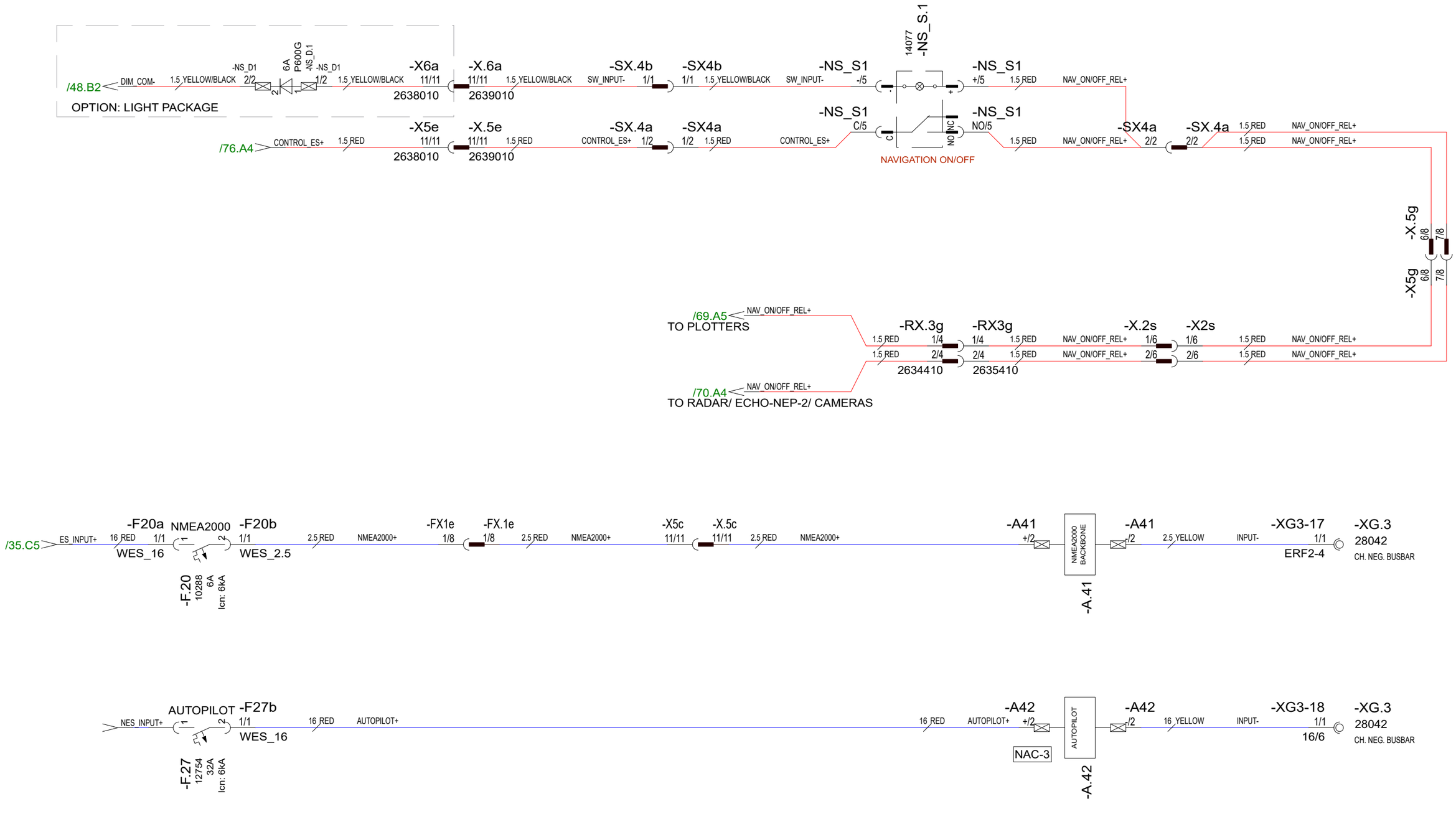

27.5.2024	TuM	C3: 2005065: NAV ON/OFF SW & LIGHT PACKAGE ADDED.	Date	23.5.2024	NAVIX	Axopar			
			Drawing by	TuM		Boat	Sub-product code	Product code	Project ID
			Sheet rev.	3		45	DC: NAVIGATION EQ - DIAGRAM	HL	68 / 444
Date of modification	Modified by	Description	Project rev.	C	Copyright by	Boat model	Title	Loc	Sheet

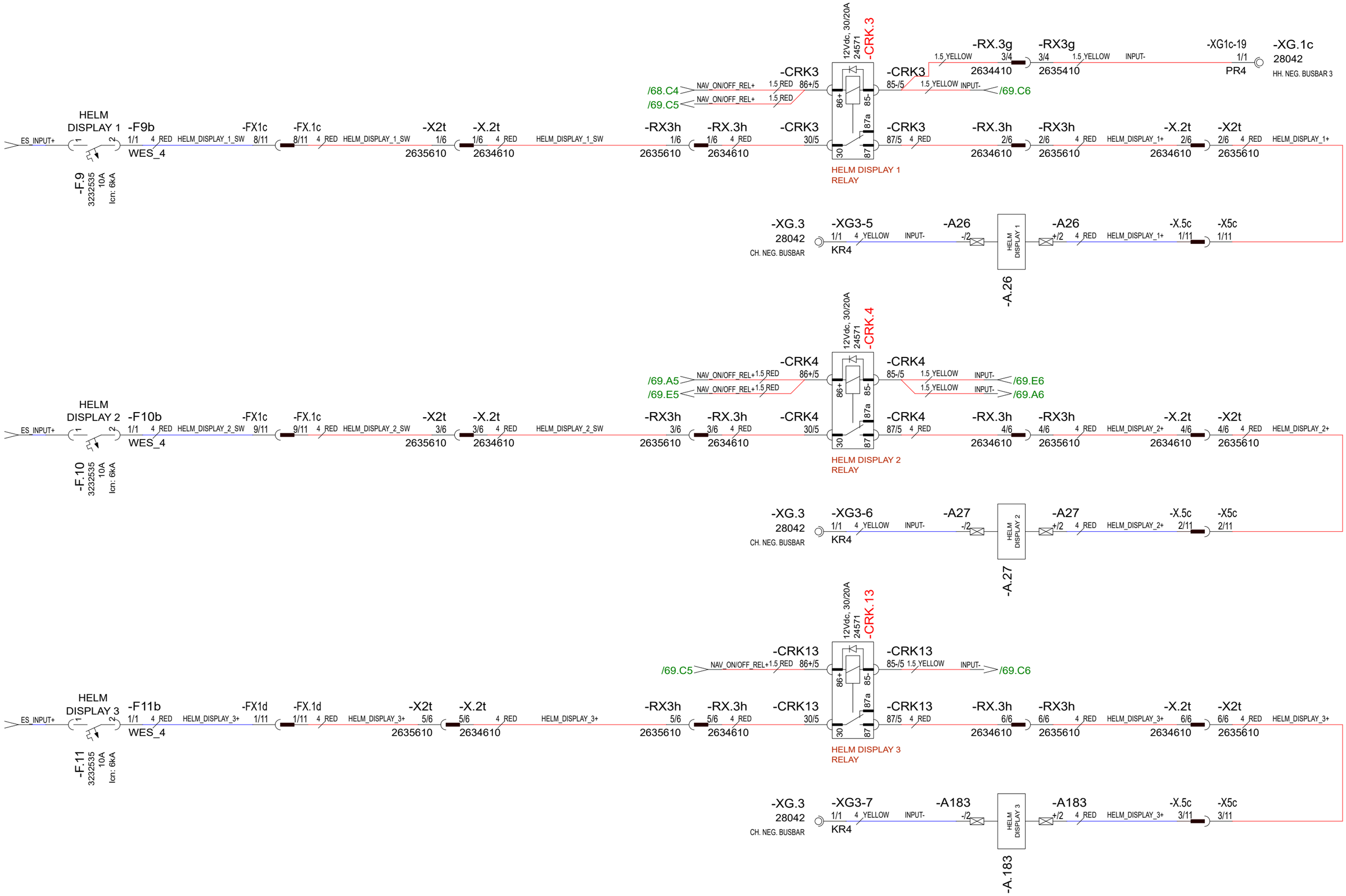

30.10.2023	PF/TuM	C3: 2004890; NOT MOD; 2005065; NAV ON/OFF RELAYS ADDED.	Date	30.10.2023	NAVIX	Axopar		
24.3.2023	TuM	A1: 2004274; NOT MODIFIED.	Drawing by	TuM		Boat	Sub-product code	Product code / Project ID
30.3.2023	TuM	B2: 2004274; HELM DISPLAY 3 & HARNESS CONN. ADDED; FWD/AFT DIPS. UNDER SAME CB.	Sheet rev.	3		45	DC: NAVIGATION EQ - DIAGRAM	HL
Date of modification	Modified by	Description	Project rev.	C	Copyright by	Boat model	Title	Loc / 69 / 444 Sheet

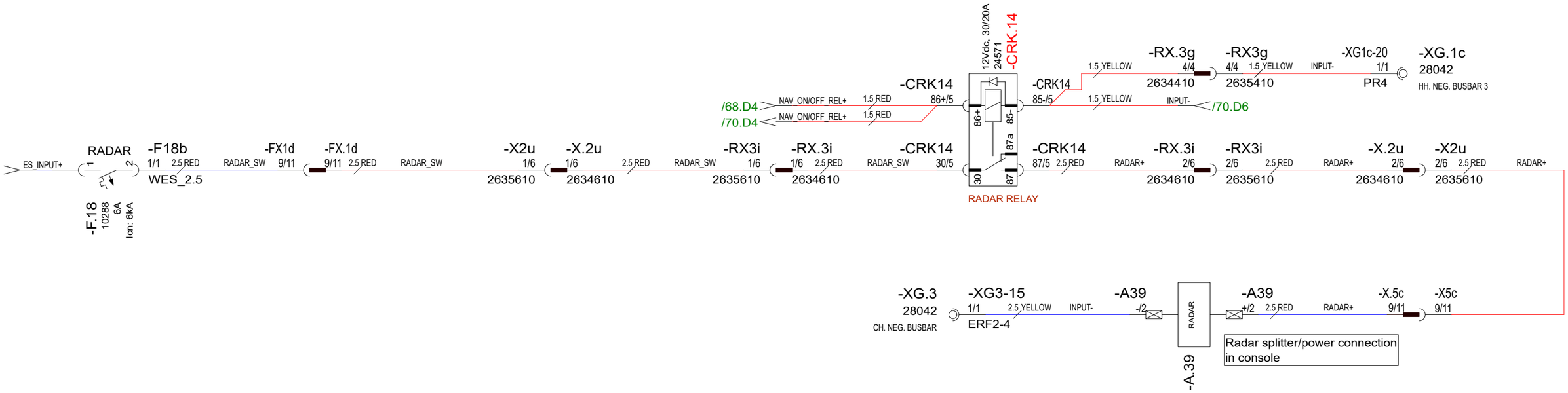

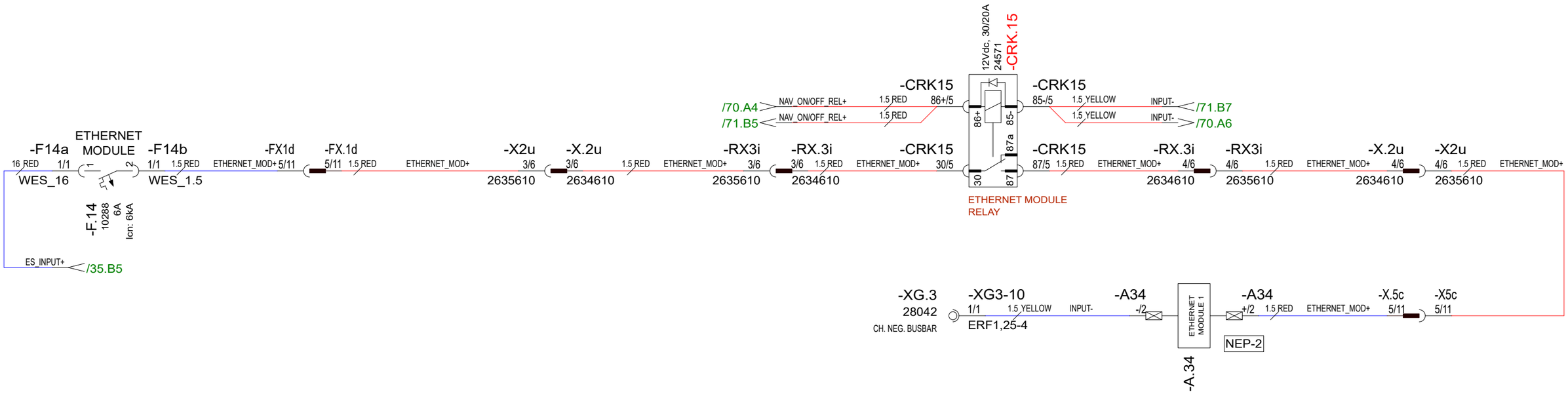

30.10.2023	PF	C3: 2004890; NOT MODIFIED, 2005065; NAV ON/OFF RELAYS ADDED.	Date	30.10.2023	NAVIX	Axopar			
24.3.2023	TuM	A1: 2004274; NOT MODIFIED.	Drawing by	TuM		Boat	Sub-product code	Product code	Project ID
30.3.2023	TuM	B2: 2004274; HARNESS CONNECTIONS ADDED.	Sheet rev.	3		45	DC: NAVIGATION EQ - DIAGRAM	HL	70 / 444
Date of modification	Modified by	Description	Project rev.	C	Copyright by	Boat model	Title	Loc	Sheet

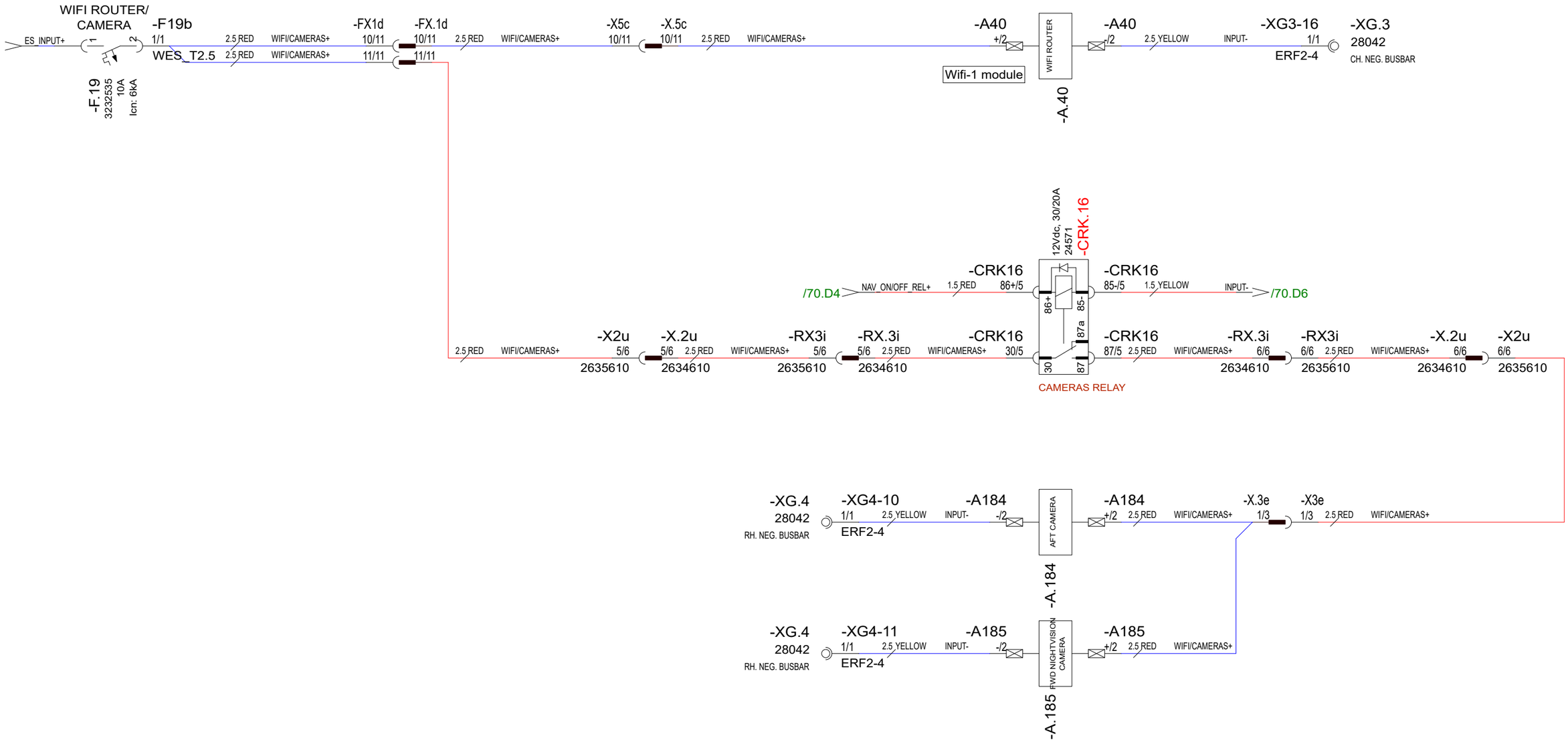

30.10.2023	PF/TuM	C3: 2004890; NOT MODIFIED, 2005065; NAV ON/OFF RELAY ADDED.	Date	30.10.2023	NAVIX	Axopar			
24.3.2023	TuM	A1: 2004274; NOT MODIFIED.	Drawing by	TuM		Boat	Sub-product code	Product code	Project ID
30.3.2023	TuM	B2: 2004274; HARNESS CONNECTIONS & CAMERAS ADDED.	Sheet rev.	3		45	DC: NAVIGATION EQ - DIAGRAM	HL	71/ 444
Date of modification	Modified by	Description	Project rev.	C	Copyright by	Boat model	Title	Loc	Sheet

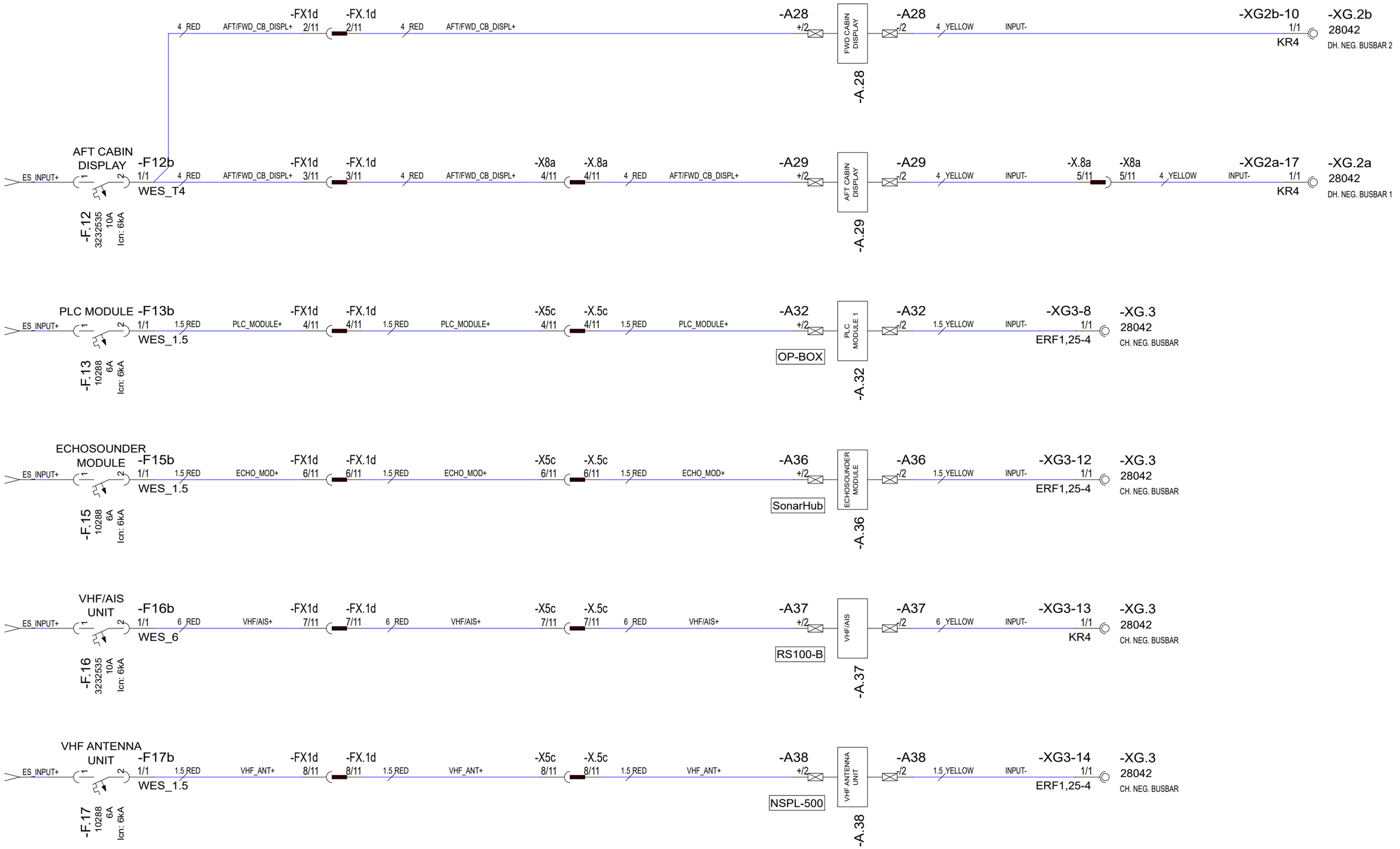

27.5.2024	TuM	C3; 2005065; NOT MODIFIED.	Date	27.5.2024	NAVIX	Axopar			
			Drawing by	TuM		Boat	Sub-product code	Product code	Project ID
			Sheet rev.	3		45	DC: NAVIGATION EQ - DIAGRAM	HL	72 / 444
Date of modification	Modified by	Description	Project rev.	C	Copyright by	Boat model	Title	Loc	Sheet

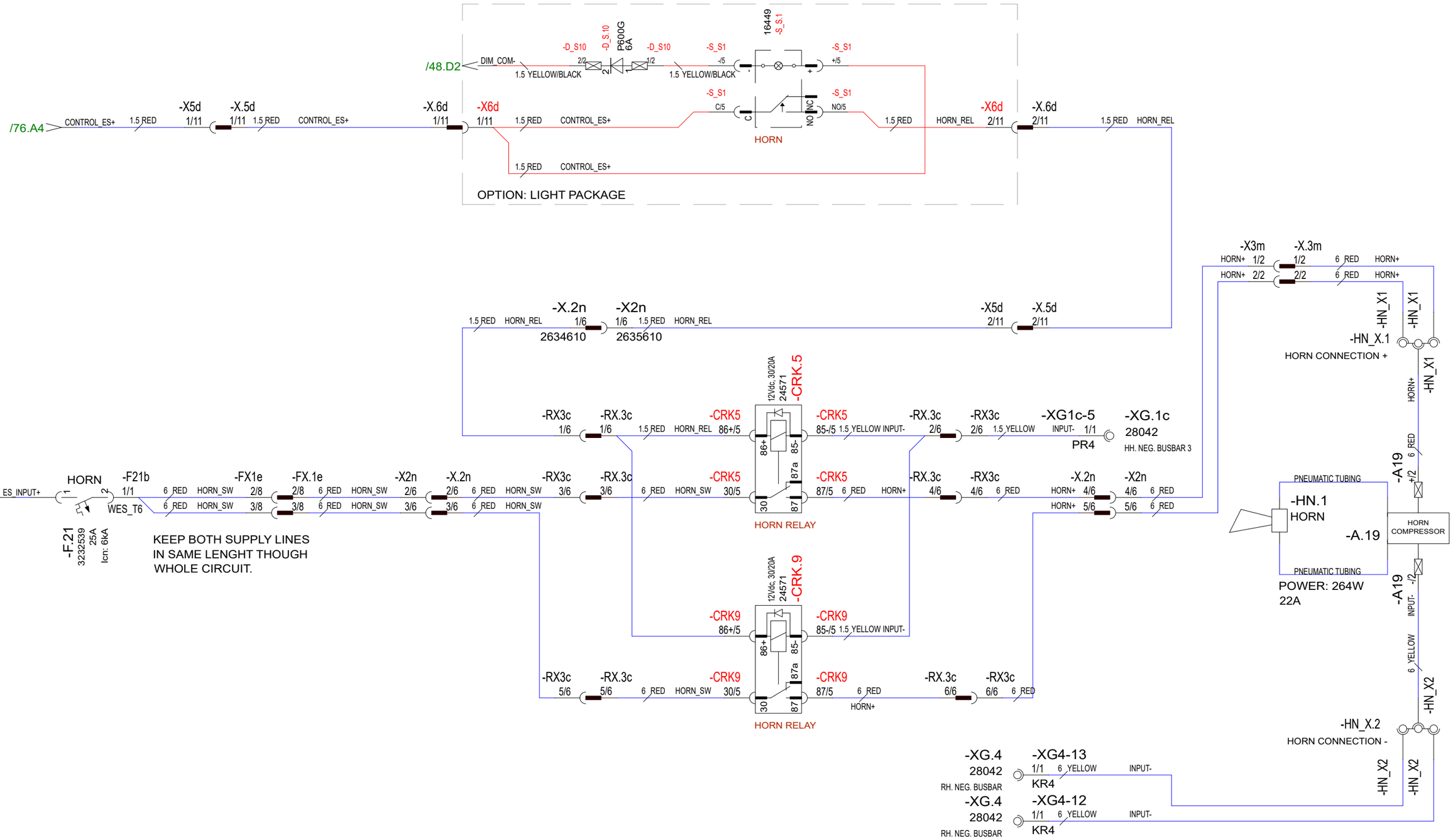

28.5.2024	TuM	C3: 2005065; SWITCHES/ RELAYS RENAMED, LIGHT PACKAGE ADDED.	Date	30.10.2023	NAVIX	Axopar			
24.3.2023	TuM	A1: 2004274; NOT MODIFIED.	Drawing by	TuM		Boat	Sub-product code	Product code	Project ID
30.3.2023	TuM	B2: 2004274; HARNESS CONN. & 2nd RELAY ADDED.	Sheet rev.	3		45	DC: HORN - DIAGRAM	HL	73 / 444
Date of modification	Modified by	Description	Project rev.	C	Copyright by	Boat model	Title	Loc	Sheet

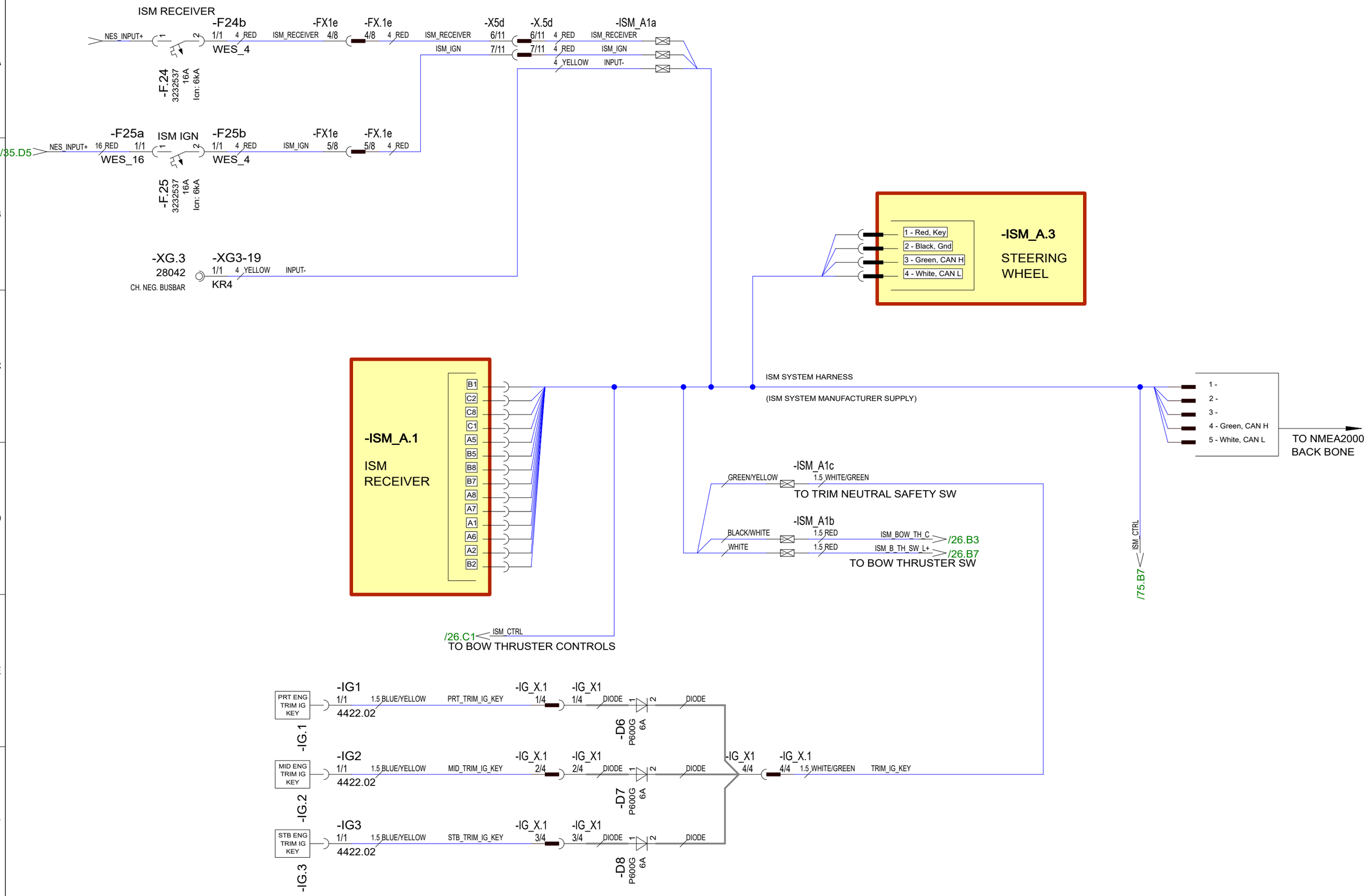

Date of modification	Modified by	Description
30.10.2023	PF	C3: 2004890; NOT MODIFIED
24.3.2023	TuM	A1: 2004274; NOT MODIFIED.
30.3.2023	TuM	B2: 2004274; HARNESS CONNECTIONS ADDED.

Date	30.10.2023
Drawing by	TuM
Sheet rev.	3
Project rev.	C

NAVIX

Copyright by

Boat	Sub-product code	Product code	Project ID
Axopar 45			

Boat model	Title		Sheet
	DC: ISM SYSTEM - DIAGRAM	HL / Loc	74 / 444

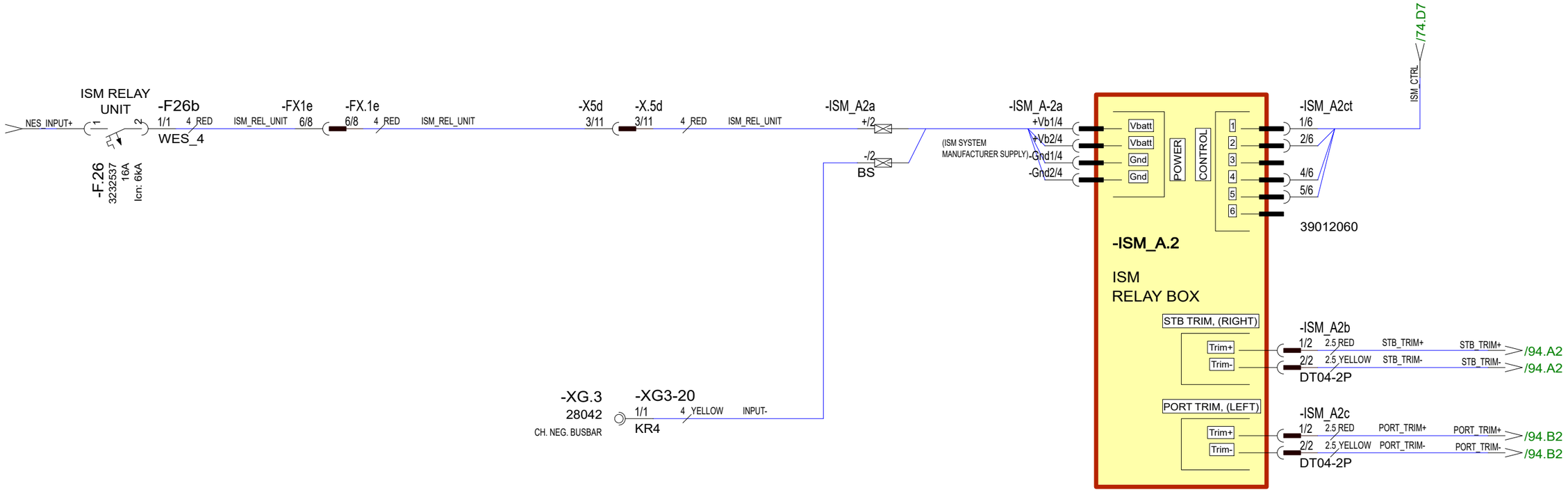

Date of modification	Modified by	Description						
30.10.2023	PF	C3: 2004890; NOT MODIFIED	Date	30.10.2023	Copyright by	Axopar		
24.3.2023	TuM	A1: 2004274; NOT MODIFIED.	Drawing by	TuM		Boat	Sub-product code	Product code	Project ID
30.3.2023	TuM	B2: 2004274; HARNESS CONNECTIONS ADDED.	Sheet rev.	3		45	DC: ISM SYSTEM - DIAGRAM	HL	75 / 444
			Project rev.	C		Boat model	Title	Loc	Sheet

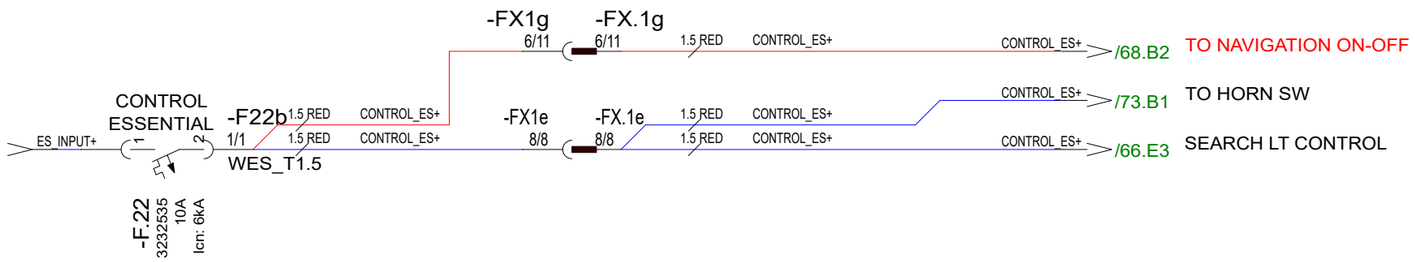

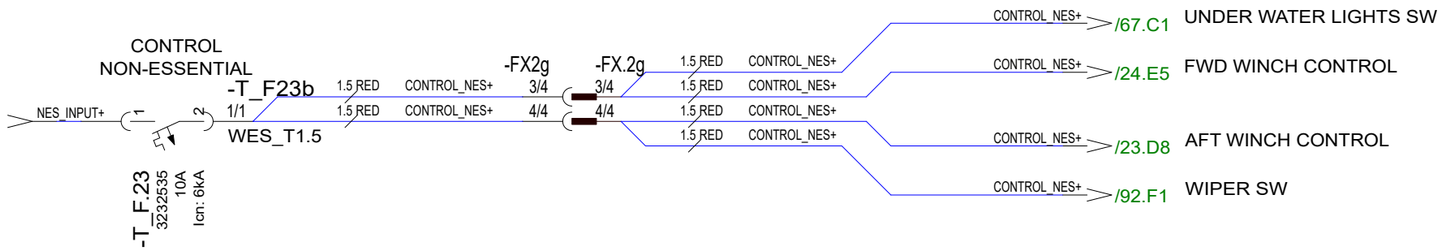

12VDC

28.5.2024	TuM	C3: 2005065; NAVIGATION ON/OFF SW FEED ADDED.	Date	30.10.2023	NAVIX	Axopar		
24.3.2023	TuM	A1: 2004274; NOT MODIFIED.	Drawing by	TuM		Boat	Sub-product code	Product code / Project ID
30.3.2023	TuM	B2: 2004274; HARNESS CONNECTIONS ADDED.	Sheet rev.	3		45	DC: CONTROL - DIAGRAM	HL / 76 / 444
Date of modification	Modified by	Description	Project rev.	C	Copyright by	Boat model	Title	Loc / Sheet

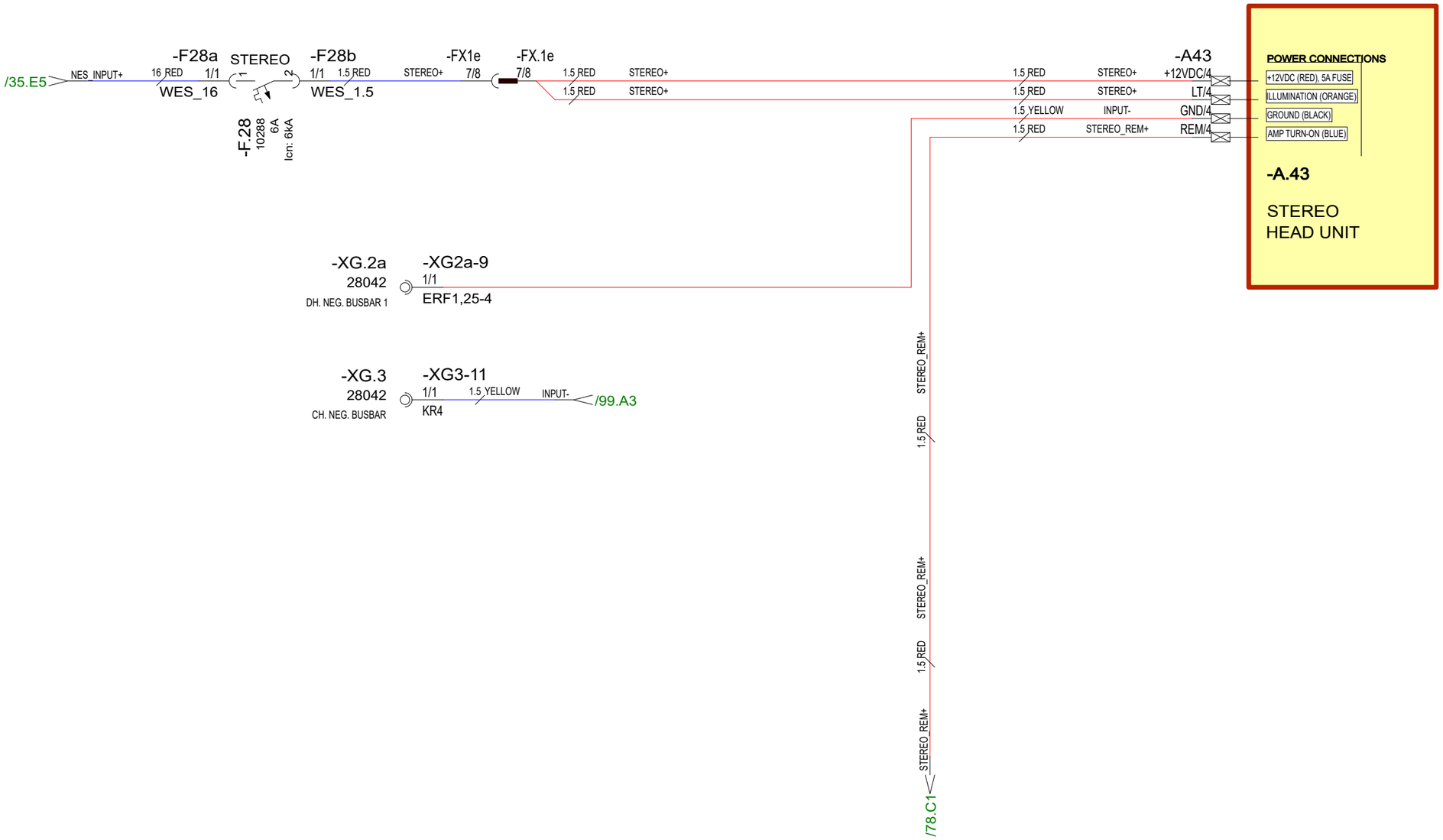

Date of modification	Modified by	Description							
29.5.2024	TuM	C3: 2005065; STEREO HEAD UNIT MOVED NEAR AMPLIFIERS.	Date	30.10.2023	Copyright by	Axopar Boat		Product code	Project ID
24.3.2023	TuM	A1: 2004274; NOT MODIFIED.	Drawing by	TuM					
30.3.2023	TuM	B2: 2004274; HARNESS CONNECTION ADDED.	Sheet rev.	3		45 Boat model	DC: AUDIO SYSTEM HEAD UNIT - DIAGRAM Title	HL Loc	77 / 444 Sheet
			Project rev.	C					

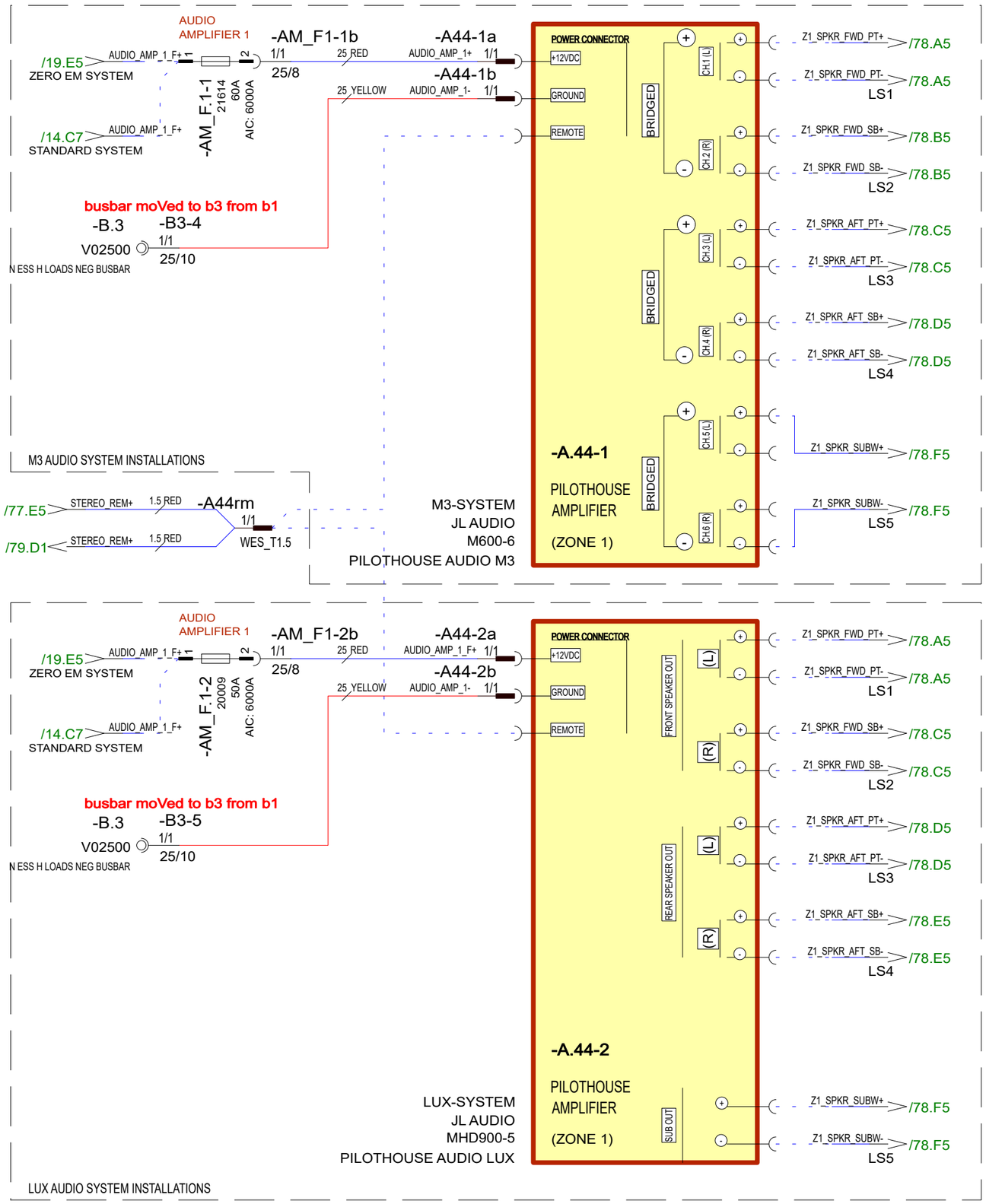

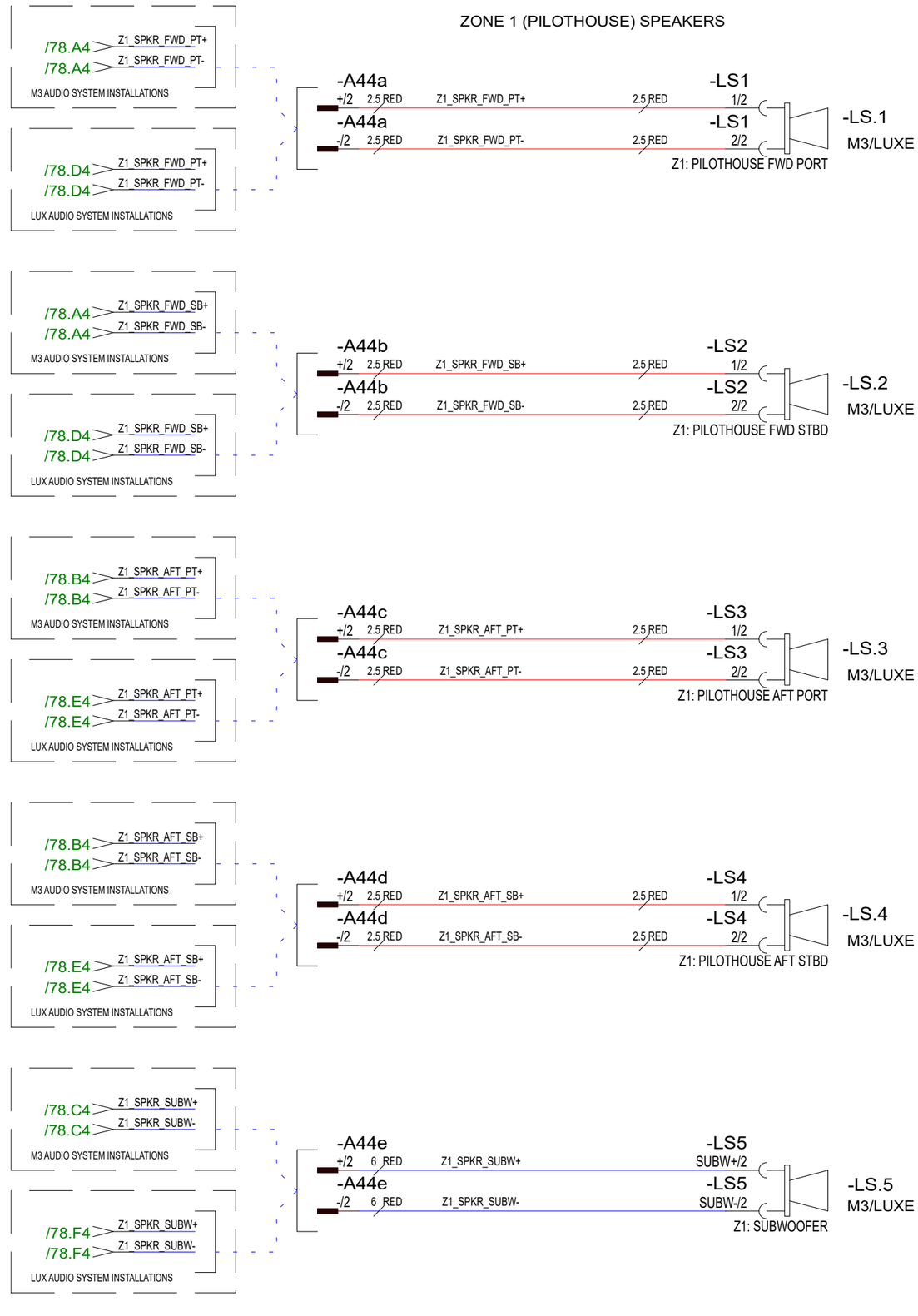

Date of modification	Modified by	Description
26.4.2024	TuM	C3: 2004998; AMPL NEGATIVE TO B3.
24.3.2023	TuM	A1: 2004274; NOT MODIFIED.
30.3.2023	TuM	B2: 2004274; HARNESS CONNECTIONS ADDED.

Date	30.10.2023
Drawing by	TuM
Sheet rev.	3
Project rev.	C

Copyright by

Axopar			
Boat	Sub-product code	Product code	Project ID
45	DC: AUDIO SYSTEM ZONE 1 - DIAGRAM	HL	78 / 444
Boat model	Title	Loc	Sheet

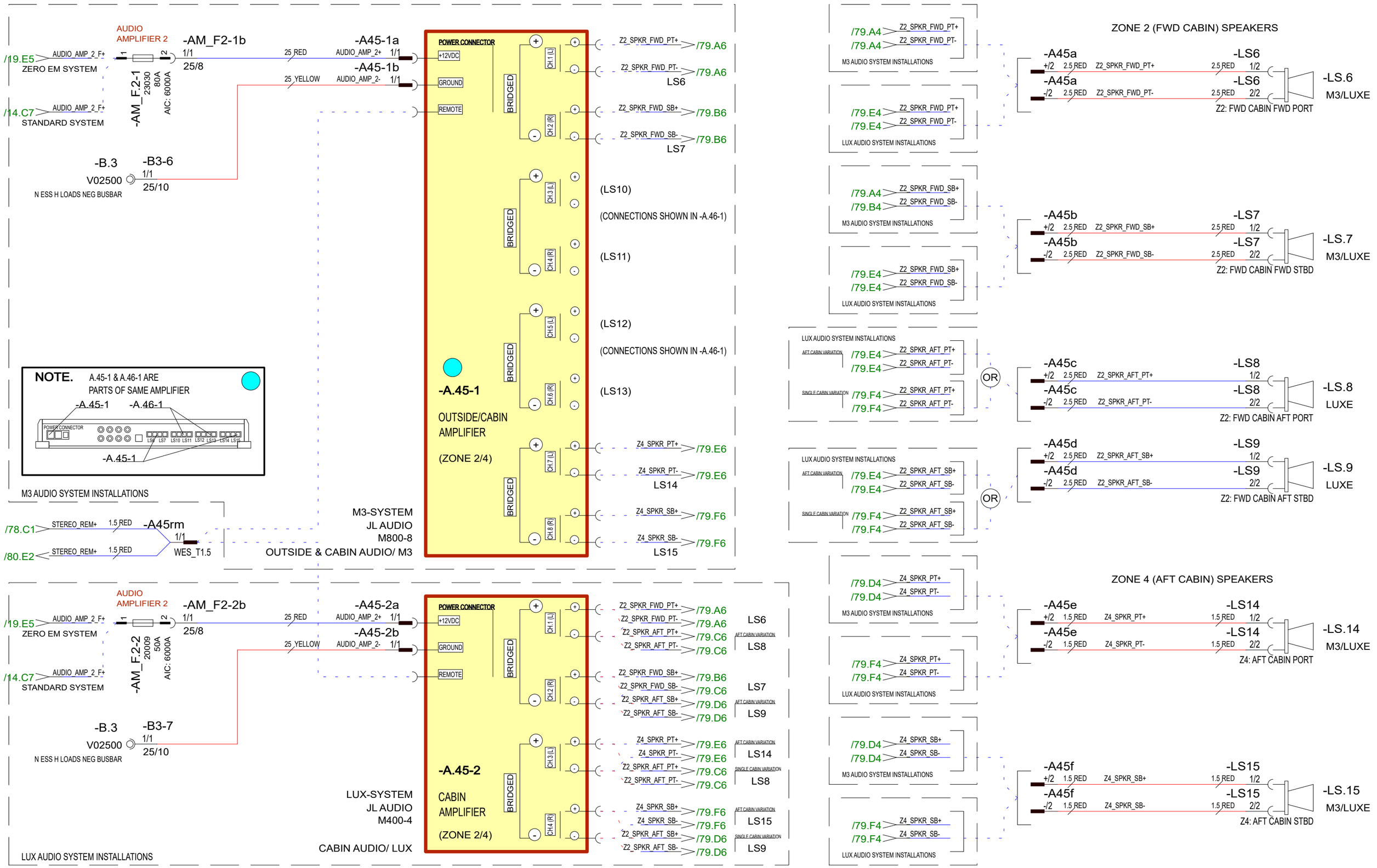

26.4.2024	TuM	C3: 2004998; AMPL NEGATIVE TO B3.	Date	30.10.2023	NAVIX	Axopar			
24.3.2023	TuM	A1: 2004274; NOT MODIFIED.	Drawing by	TuM		Boat	Sub-product code	Product code	Project ID
30.3.2023	TuM	B2: 2004274; HARNESS CONNECTIONS ADDED.	Sheet rev.	3		45	DC: AUDIO SYSTEM ZONE 2, 4 - DIAGRAM	HL	79 / 444
Date of modification	Modified by	Description	Project rev.	C	Copyright by	Boat model	Title	Loc	Sheet

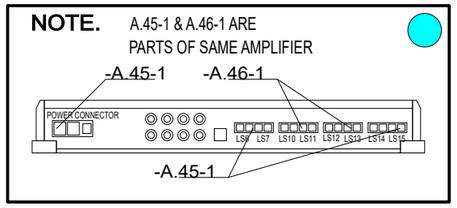

M3 AUDIO SYSTEM INSTALLATIONS

(CONNECTIONS SHOWN IN -A.45-1)

POWER CONNECTOR
+12VDC
GROUND
REMOTE
BRIDGED
CH.1 (L)
CH.2 (R)

(LS6)

(CONNECTIONS SHOWN IN -A.45-1)

(LS7)

BRIDGED
CH.3 (L)
CH.4 (R)

Z3_SPKR_FWD_PT+ /80.A5
Z3_SPKR_FWD_PT- /80.A5
LS10
Z3_SPKR_FWD_SB+ /80.C5
Z3_SPKR_FWD_SB- /80.C5
LS11

BRIDGED
CH.5 (L)
CH.6 (R)

Z3_SPKR_AFT_PT+ /80.D5
Z3_SPKR_AFT_PT- /80.D5
LS12
Z3_SPKR_AFT_SB+ /80.E5
Z3_SPKR_AFT_SB- /80.E5
LS13

-A.46-1
OUTSIDE/CABIN
AMPLIFIER
(ZONE 3)

(LS14)

(CONNECTIONS SHOWN IN -A.45-1)

BRIDGED
CH.7 (L)
CH.8 (R)

(LS15)

M3-SYSTEM
JL AUDIO
M800-8
OUTSIDE & CABIN AUDIO/ M3

AUDIO
AMPLIFIER 3
-AM_F3-2b
/19.E5 AUDIO_AMP_3_F+
ZERO EM SYSTEM
1 2
1/1
25/8
-AM_F3-2
20009
50A
AIC: 6000A
/14.C7 AUDIO_AMP_3_F+
STANDARD SYSTEM
-B.3
V02500
N ESS H LOADS NEG BUSBAR
-B3-8
1/1
25/10
-A46-2a
25 RED AUDIO_AMP_3+ 1/1
-A46-2b
25 YELLOW AUDIO_AMP_3- 1/1
-A46rm
/79.D1 STEREO_REM+ 1.5 RED 1/1
WES_1.5

POWER CONNECTOR
+12VDC
GROUND
REMOTE
FRONT SPEAKER OUT
(L)
(R)

Z3_SPKR_FWD_PT+ /80.B5
Z3_SPKR_FWD_PT- /80.B5
LS10
Z3_SPKR_FWD_SB+ /80.C5
Z3_SPKR_FWD_SB- /80.C5
LS11

REAR SPEAKER OUT
(L)
(R)

Z3_SPKR_AFT_PT+ /80.D5
Z3_SPKR_AFT_PT- /80.D5
LS12
Z3_SPKR_AFT_SB+ /80.F5
Z3_SPKR_AFT_SB- /80.F5
LS13

-A.46-2
OUTSIDE
AMPLIFIER
(ZONE 3)

LUX-SYSTEM
JL AUDIO
MHD600-4
OUTSIDE AUDIO/ LUX

LUX AUDIO SYSTEM INSTALLATIONS

/80.B4 Z3_SPKR_FWD_PT+
/80.B4 Z3_SPKR_FWD_PT-
M3 AUDIO SYSTEM INSTALLATIONS
/80.E4 Z3_SPKR_FWD_PT+
/80.E4 Z3_SPKR_FWD_PT-
LUX AUDIO SYSTEM INSTALLATIONS

/80.B4 Z3_SPKR_FWD_SB+
/80.B4 Z3_SPKR_FWD_SB-
M3 AUDIO SYSTEM INSTALLATIONS
/80.E4 Z3_SPKR_FWD_SB+
/80.E4 Z3_SPKR_FWD_SB-
LUX AUDIO SYSTEM INSTALLATIONS

/80.C4 Z3_SPKR_AFT_PT+
/80.C4 Z3_SPKR_AFT_PT-
M3 AUDIO SYSTEM INSTALLATIONS
/80.F4 Z3_SPKR_AFT_PT+
/80.F4 Z3_SPKR_AFT_PT-
LUX AUDIO SYSTEM INSTALLATIONS

/80.C4 Z3_SPKR_AFT_SB+
/80.C4 Z3_SPKR_AFT_SB-
M3 AUDIO SYSTEM INSTALLATIONS
/80.F4 Z3_SPKR_AFT_SB+
/80.F4 Z3_SPKR_AFT_SB-
LUX AUDIO SYSTEM INSTALLATIONS

ZONE 3 (OUTSIDE) SPEAKERS

-A46a +/2 2.5 RED Z3_SPKR_FWD_PT+ -LS10 1/2
-A46a -/2 2.5 RED Z3_SPKR_FWD_PT- -LS10 2/2
-LS.10 M3/LUXE
Z3: OUTSIDE FWD PORT

-A46b +/2 2.5 RED Z3_SPKR_FWD_SB+ -LS11 1/2
-A46b -/2 2.5 RED Z3_SPKR_FWD_SB- -LS11 2/2
-LS.11 M3/LUXE
Z3: OUTSIDE FWD STBD

-A46c +/2 2.5 RED Z3_SPKR_AFT_PT+ 2.5 RED -LS12 1/2
-A46c -/2 2.5 RED Z3_SPKR_AFT_PT- 2.5 RED -LS12 2/2
-LS.12 M3/LUXE
Z3: OUTSIDE AFT PORT
XC

2.5 RED Z3_SPKR_AFT_PT+ -LS16 1/2
2.5 RED Z3_SPKR_AFT_PT- -LS16 2/2
-LS.16 M3/LUXE
Z3: OUTSIDE AFT PORT
SUN-TOP

-A46d +/2 2.5 RED Z3_SPKR_AFT_SB+ 2.5 RED -LS13 1/2
-A46d -/2 2.5 RED Z3_SPKR_AFT_SB- 2.5 RED -LS13 2/2
-LS.13 M3/LUXE
Z3: OUTSIDE AFT STBD
XC

2.5 RED Z3_SPKR_AFT_SB+ -LS17 1/2
2.5 RED Z3_SPKR_AFT_SB- -LS17 2/2
-LS.17 M3/LUXE
Z3: OUTSIDE AFT STBD
SUN-TOP

Date of modification	Modified by	Description
7.6.2024	TuM	C3: 2004998; AMPL NEGATIVE TO B3.
24.3.2023	TuM	A1: 2004274; NOT MODIFIED.
30.3.2023	TuM	B2: 2004274; HARNESS CONN. & ST OUTSIDE SPEAKERS ADDED.

Date	30.10.2023
Drawing by	TuM
Sheet rev.	3
Project rev.	C

NAVIX
Copyright by

Boat	Sub-product code	Product code	Project ID
Axopar			
Boat model	Title		Loc
45	DC: AUDIO SYSTEM ZONE 3 - DIAGRAM	HL	Sheet
			80 / 444

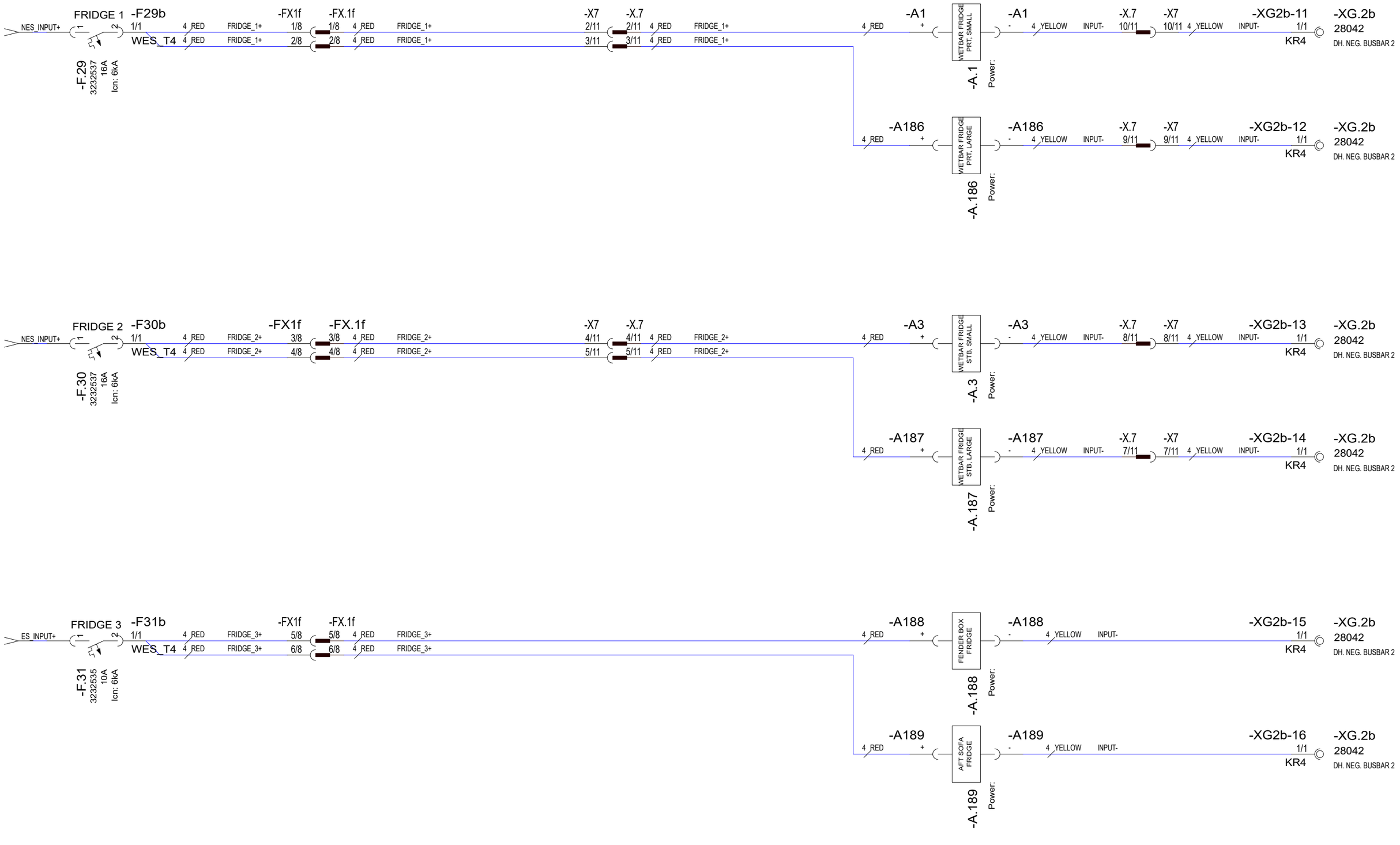

30.10.2023	PF	C3: 2004890; NOT MODIFIED	Date	30.10.2023	NAVIX	Axopar			
24.3.2023	TuM	A1: 2004274; NOT MODIFIED.	Drawing by	TuM		Boat	Sub-product code	Product code	Project ID
30.3.2023	TuM	B2: 2004274; FRIDGE CB 3 & HARNESS CONN. & A186-9 ADDED.	Sheet rev.	3		45	DC: FRIDGES - DIAGRAM	HL	81/ 444
Date of modification	Modified by	Description	Project rev.	C	Copyright by	Boat model	Title	Loc	Sheet

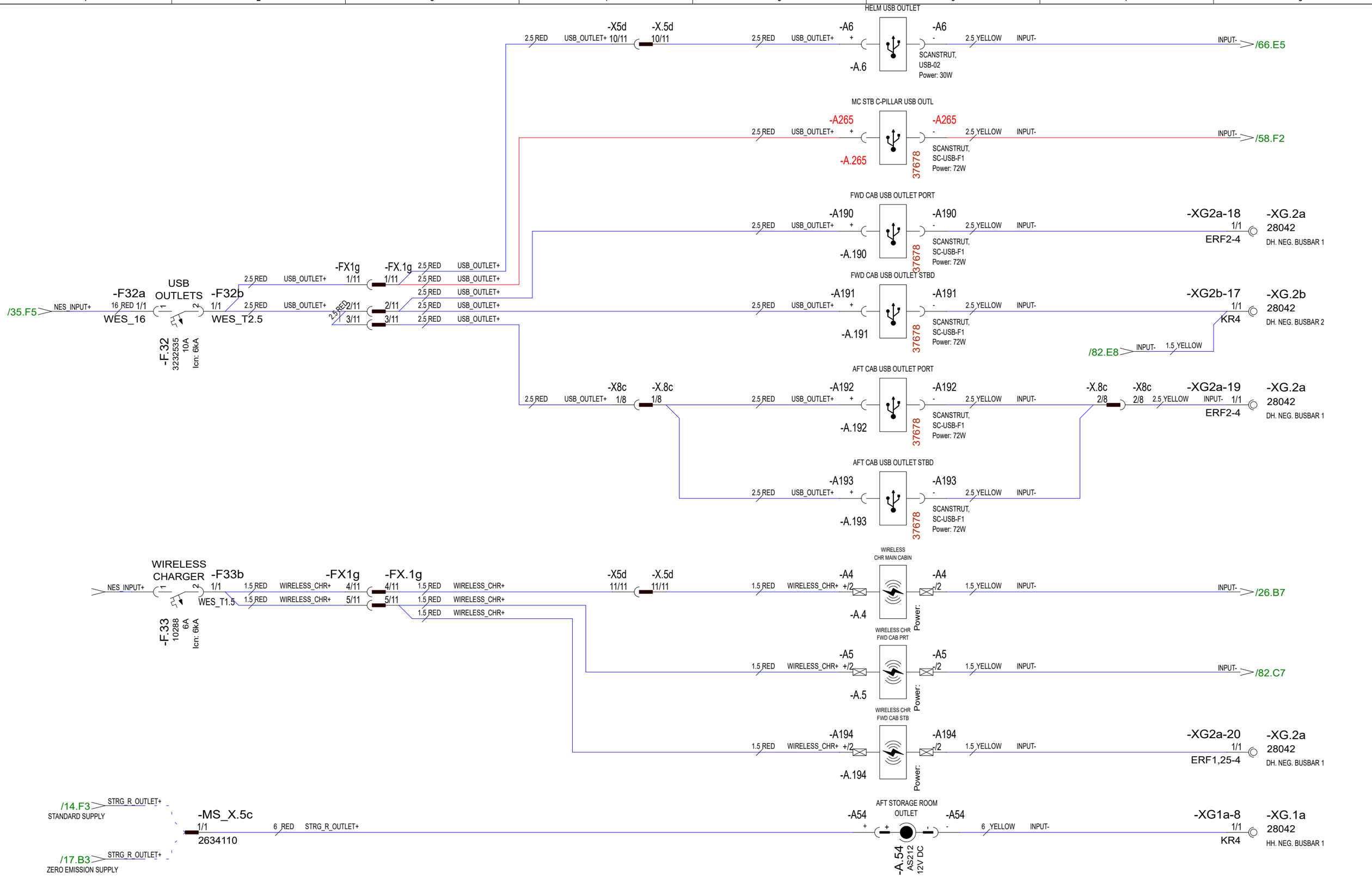

7.6.2024	TuM	C3: 2005065; A265 ADDED.	Date	30.10.2023	NAVIX	Axopar			
24.3.2023	TuM	A1: 2004274; NOT MODIFIED.	Drawing by	TuM		Boat	Sub-product code	Product code	Project ID
30.3.2023	TuM	B2: 2004274; HARNESS CONN. & USB/ WIRELESS CHR ADDED.	Sheet rev.	3		45	DC: WIRELESS CHR/ USB OUTLET - DIAGRAM	HL	82 / 444
Date of modification	Modified by	Description	Project rev.	C	Copyright by	Boat model	Title	Loc	Sheet

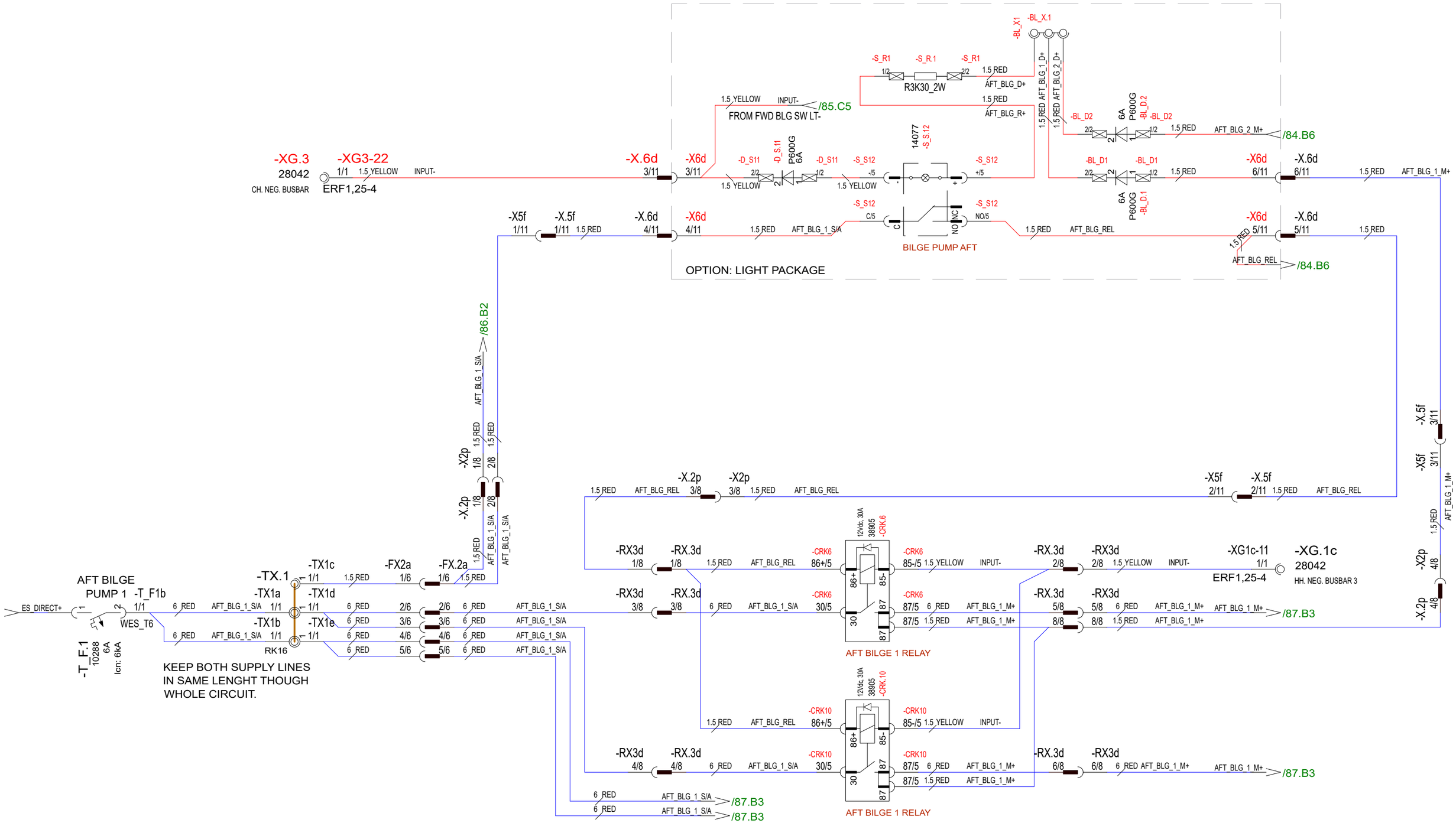

28.5.2024	TuM	C3: 2005065; AFT BILGE PMPS BEHIND SINGLE CTRL SW, LIGHT PACKAGE ADDED, SW/REL RENAMED.	Date	30.10.2023	NAVIX	Axopar			
24.3.2023	TuM	A1: 2004274; NOT MODIFIED.	Drawing by	TuM		Boat	Sub-product code	Product code	Project ID
30.3.2023	TuM	B2: 2004274; HARNESS CONN. & 2nd SUPPLY LINE ADDDED.	Sheet rev.	3		45	DC: AFT BILGE PUMP 1 CTRL - DIAGRAM	HL	83 / 444
Date of modification	Modified by	Description	Project rev.	C	Copyright by	Boat model	Title	Loc	Sheet

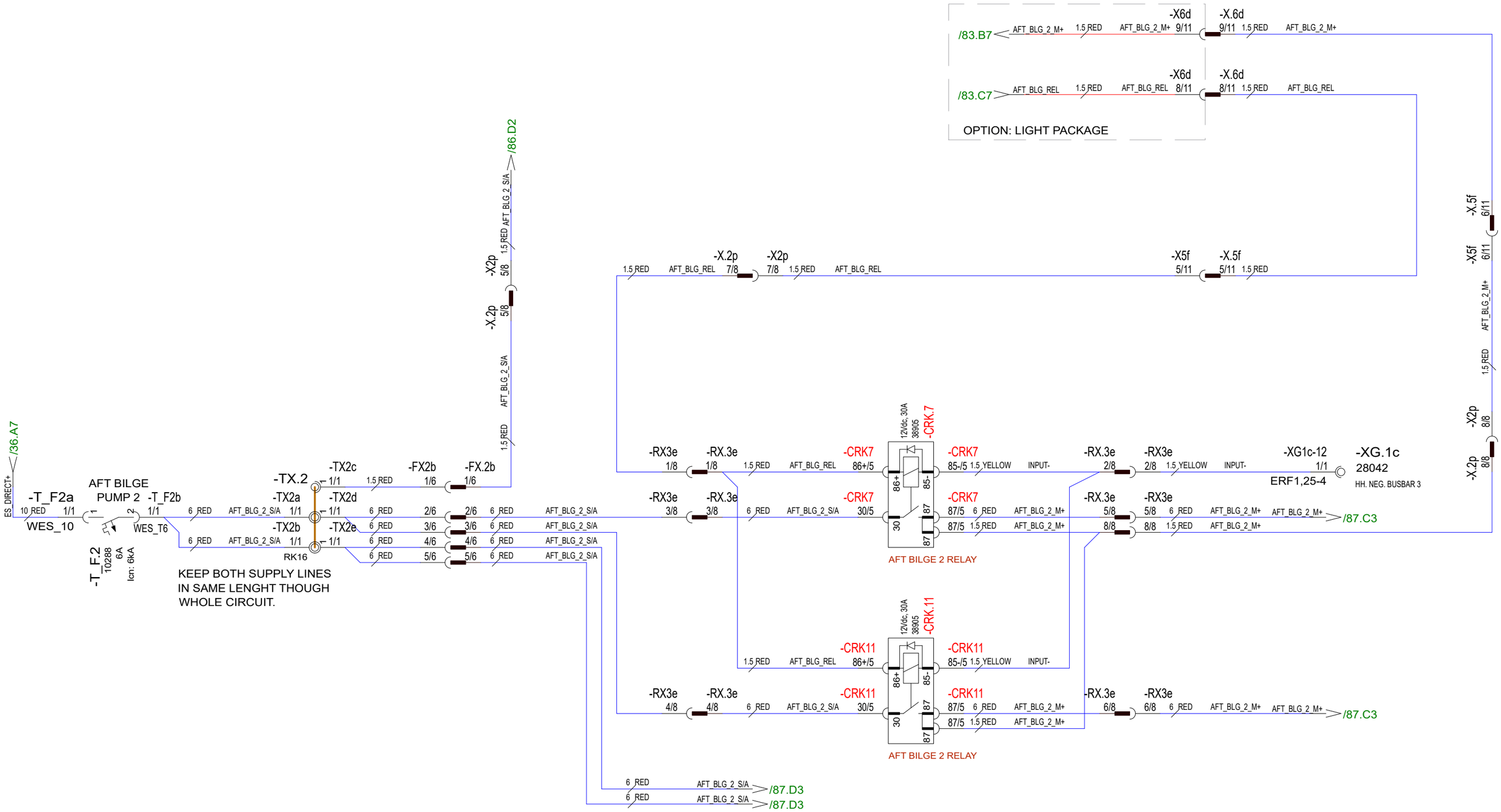

28.5.2024	TuM	C3: 2005065; AFT BILGE PMPS BEHIND SINGLE CTRL SW, LIGHT PACKAGE ADDED, SW/REL RENAMED.	Date	30.10.2023	NAVIX	Axopar			
24.3.2023	TuM	A1: 2004274; NOT MODIFIED.	Drawing by	TuM		Boat	Sub-product code	Product code	Project ID
30.3.2023	TuM	B2: 2004274; HARNESS CONN. & 2nd SUPPLY LINE ADDDED.	Sheet rev.	3		45	DC: AFT BILGE PUMP 2 CTRL - DIAGRAM	HL	84 / 444
Date of modification	Modified by	Description	Project rev.	C	Copyright by	Boat model	Title	Loc	Sheet

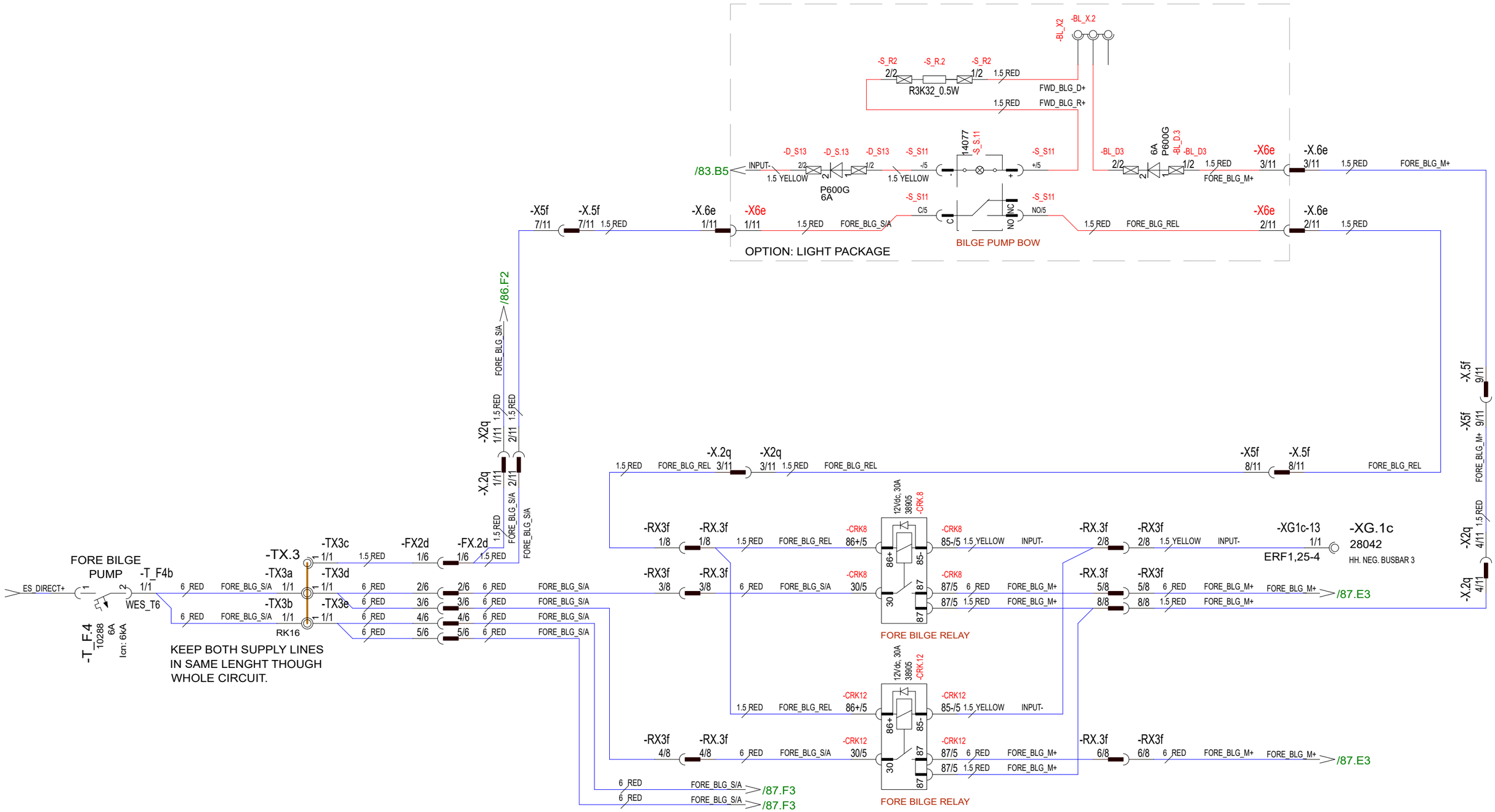

28.5.2024	TuM	C3: 2005065; LIGHT PACKAGE ADDED, SW/REL RENAMED.	Date	30.10.2023	NAVIX	Axopar			
24.3.2023	TuM	A1: 2004274; NOT MODIFIED.	Drawing by	TuM		Boat	Sub-product code	Product code	Project ID
30.3.2023	TuM	B2: 2004274; HARNESS CONN. & 2nd SUPPLY LINE ADDDED.	Sheet rev.	3		45	DC: FWD BILGE PUMP CTRL - DIAGRAM	HL	
Date of modification	Modified by	Description	Project rev.	C	Copyright by	Boat model	Title	Loc	85 / 444 Sheet

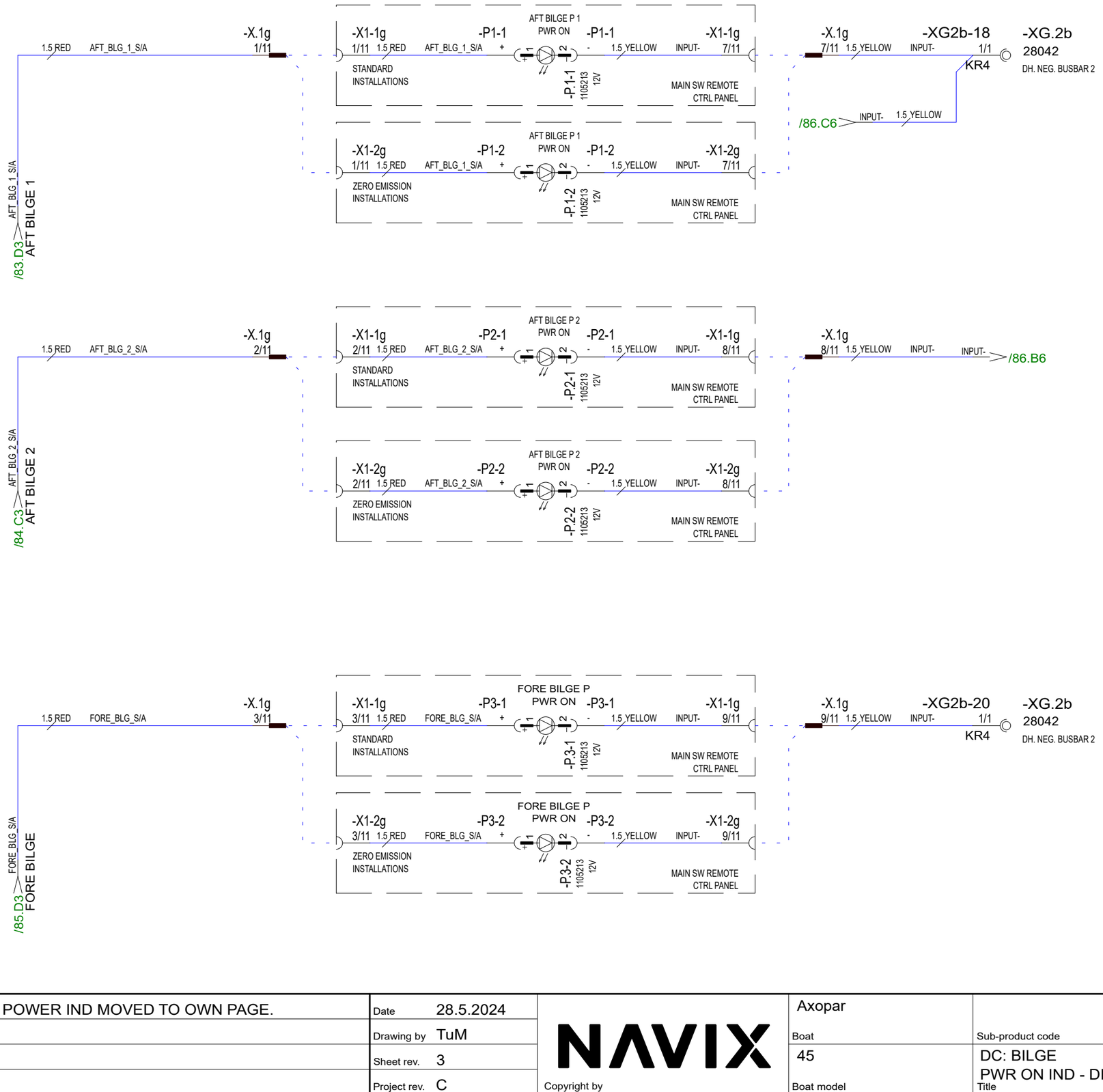

28.5.2024	TuM	C3: 2005065; BILGE POWER IND MOVED TO OWN PAGE.	Date	28.5.2024	NAVIX	Axopar			
			Drawing by	TuM		Boat	Sub-product code	Product code	Project ID
			Sheet rev.	3		45	DC: BILGE PWR ON IND - DIAGRAM	HL	86 / 444
Date of modification	Modified by	Description	Project rev.	C	Copyright by	Boat model	Title	Loc	Sheet

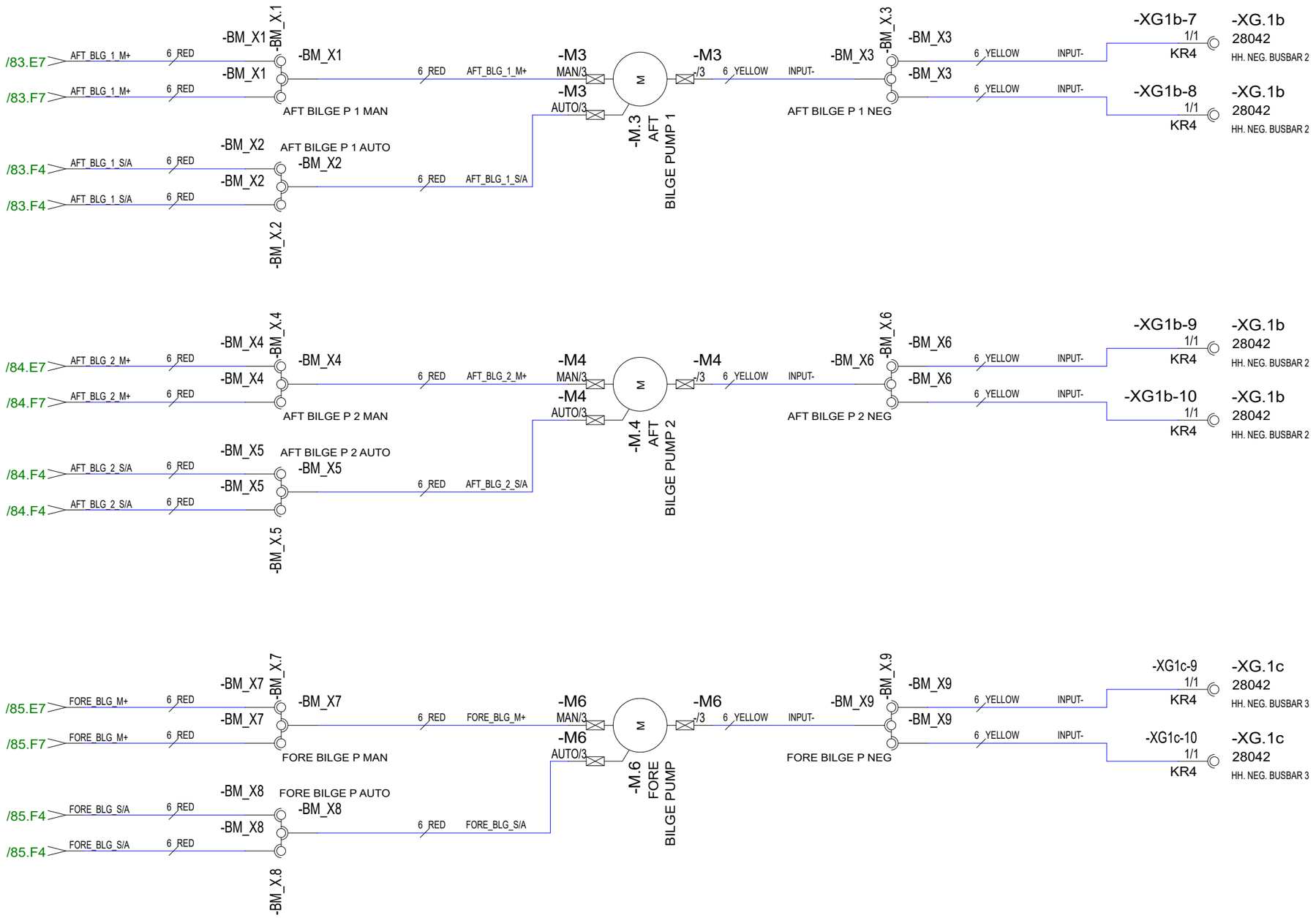

28.5.2024	PF/TuM	C3: 2004890; 2005065 NOT MODIFIED	Date	30.10.2023	NAVIX	Axopar			
24.3.2023	TuM	A1: 2004274; NOT MODIFIED.	Drawing by	TuM		Boat	Sub-product code	Product code	Project ID
24.4.2023	TuM	B2: 2004274; HARNESS CONN. & 2nd SUPPLY LINE ADDED.	Sheet rev.	3		45	DC: AFT/FWD BILGE PUMPS - DIAGRAM	HL	87 / 444
Date of modification	Modified by	Description	Project rev.	C	Copyright by	Boat model	Title	Loc	Sheet

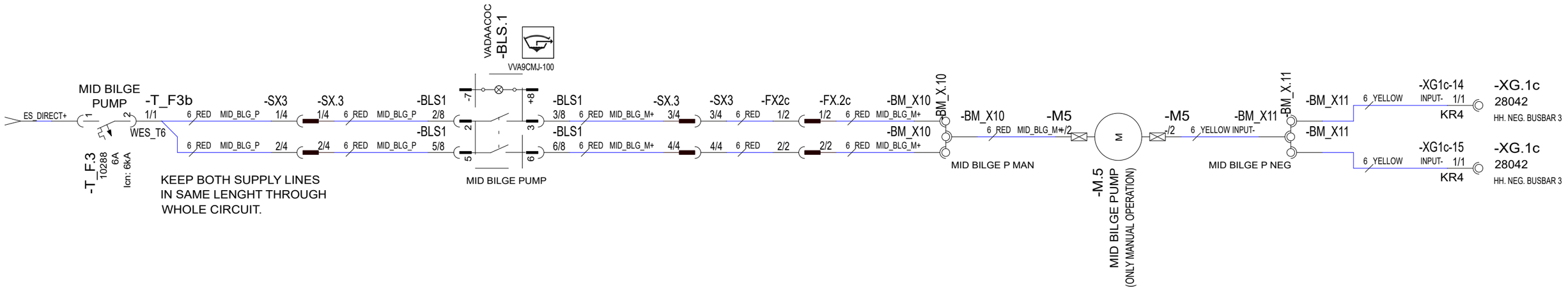

28.5.2024	PF/TuM	C3: 2004890; 2005065 NOT MODIFIED	Date 30.10.2023	NAVIX	Axopar			
24.3.2023	TuM	A1: 2004274; NOT MODIFIED.	Drawing by TuM		Boat	Sub-product code	Product code	Project ID
30.3.2023	TuM	B2: 2004274; HARNESS CONN. & 2nd SUPPLY LINE ADDED.	Sheet rev. 3		45	DC: MID BILGE PUMP - DIAGRAM	HL	88 / 444
Date of modification	Modified by	Description	Project rev. C	Copyright by	Boat model	Title	Loc	Sheet

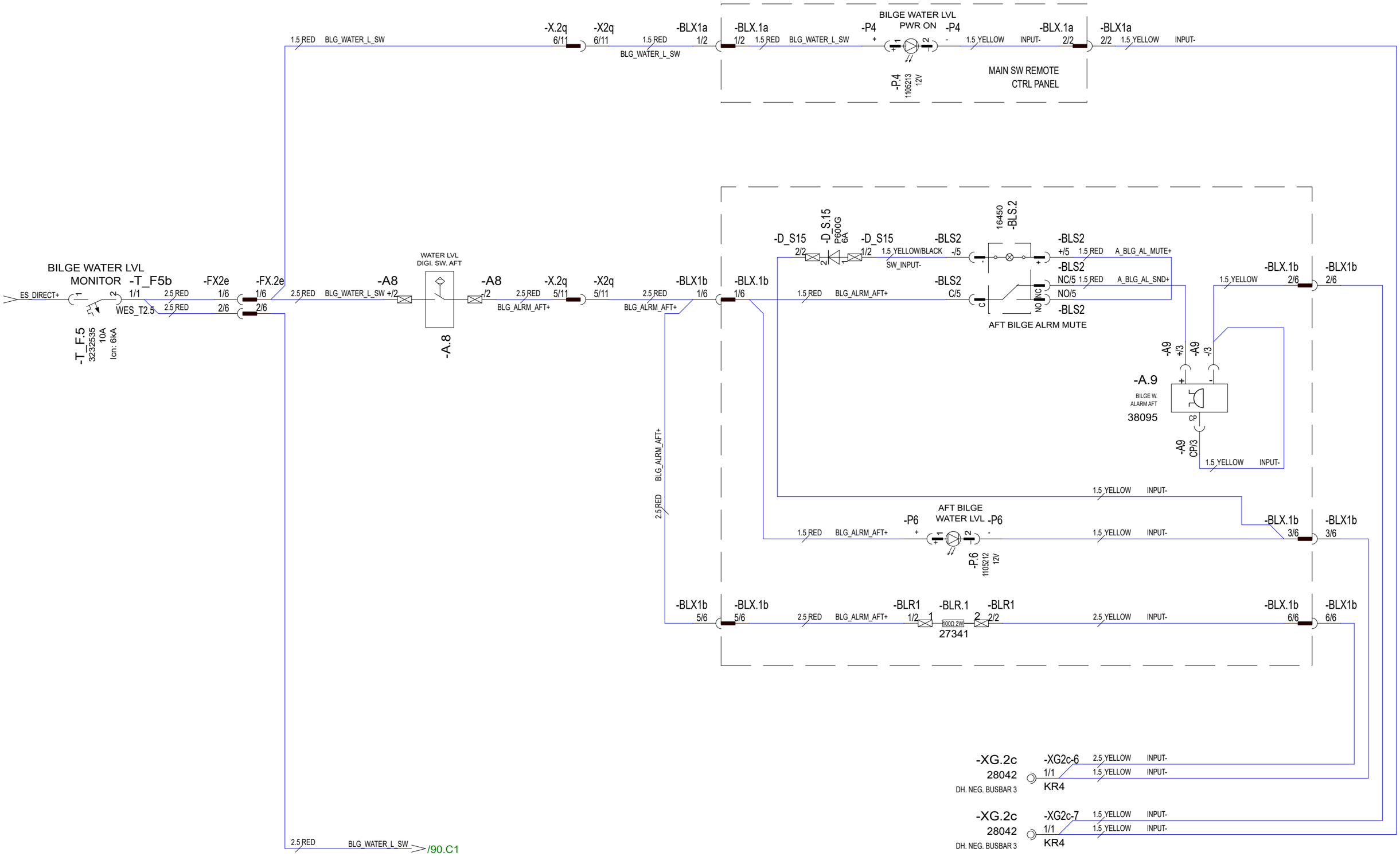

28.5.2024	PF/TuM	C3: 2004890; 2005065 NOT MODIFIED	Date	30.10.2023	NAVIX	Axopar			
24.3.2023	TuM	A1: 2004274; NOT MODIFIED.	Drawing by	TuM		Boat	Sub-product code	Product code	Project ID
30.3.2023	TuM	B2: 2004274; HARNESS CONNECTIONS & RESISTOR ADDED.	Sheet rev.	3		45	DC: BILGE WATER LEVEL MONITOR - DIAGRAM	HL	89 / 444
Date of modification	Modified by	Description	Project rev.	C	Copyright by	Boat model	Title	Loc	Sheet

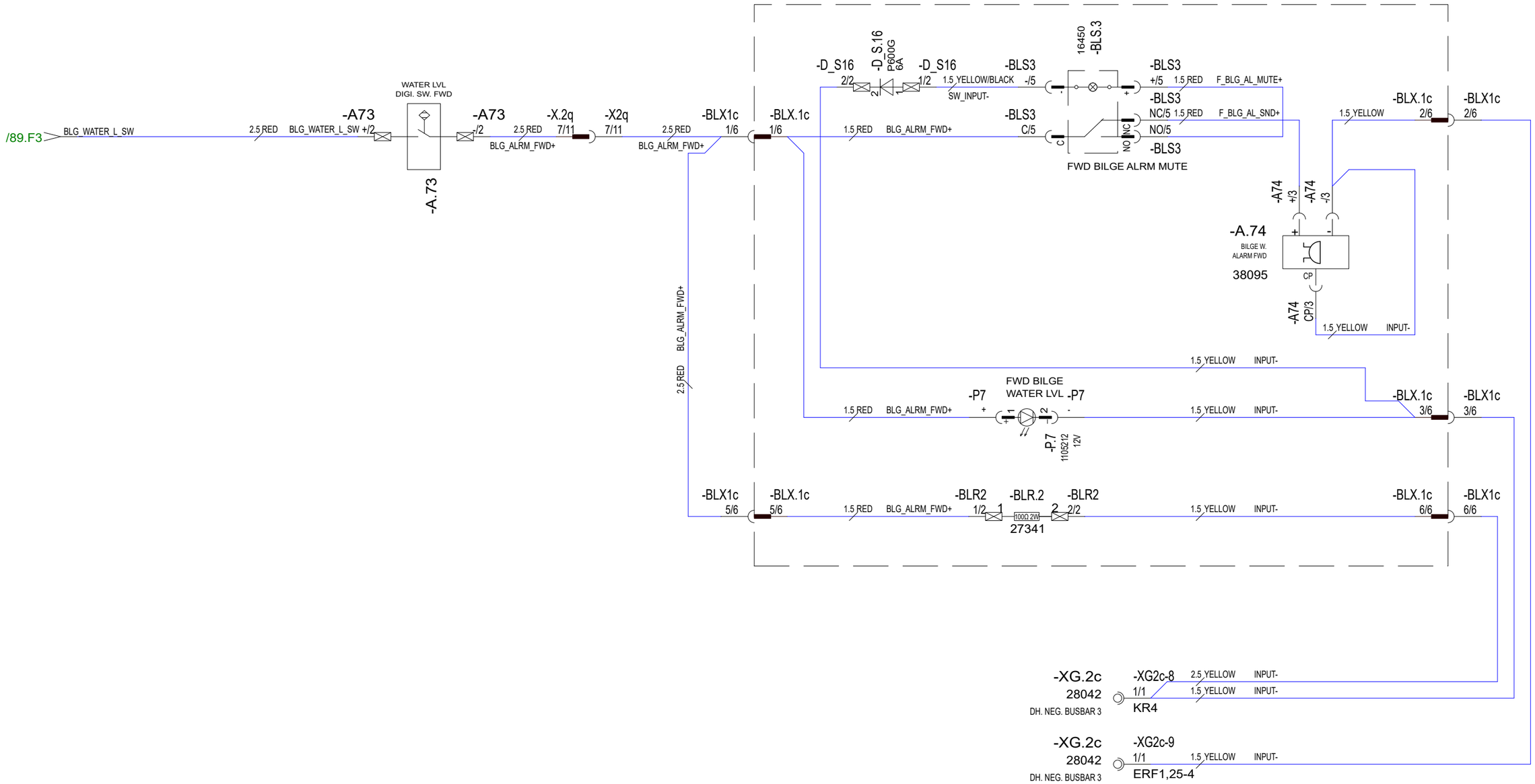

28.5.2024	PF/TuM	C3: 2004890; 2005065 NOT MODIFIED	Date	30.10.2023	NAVIX	Axopar			
24.3.2023	TuM	A1: 2004274; NOT MODIFIED.	Drawing by	TuM		Boat	Sub-product code	Product code	Project ID
26.4.2023	TuM	B2: 2004274; HARNESS CONNECTIONS & RESISTOR ADDED.	Sheet rev.	3		45	DC: BILGE WATER LEVEL MONITOR - DIAGRAM	HL	90 / 444
Date of modification	Modified by	Description	Project rev.	C	Copyright by	Boat model	Title	Loc	Sheet

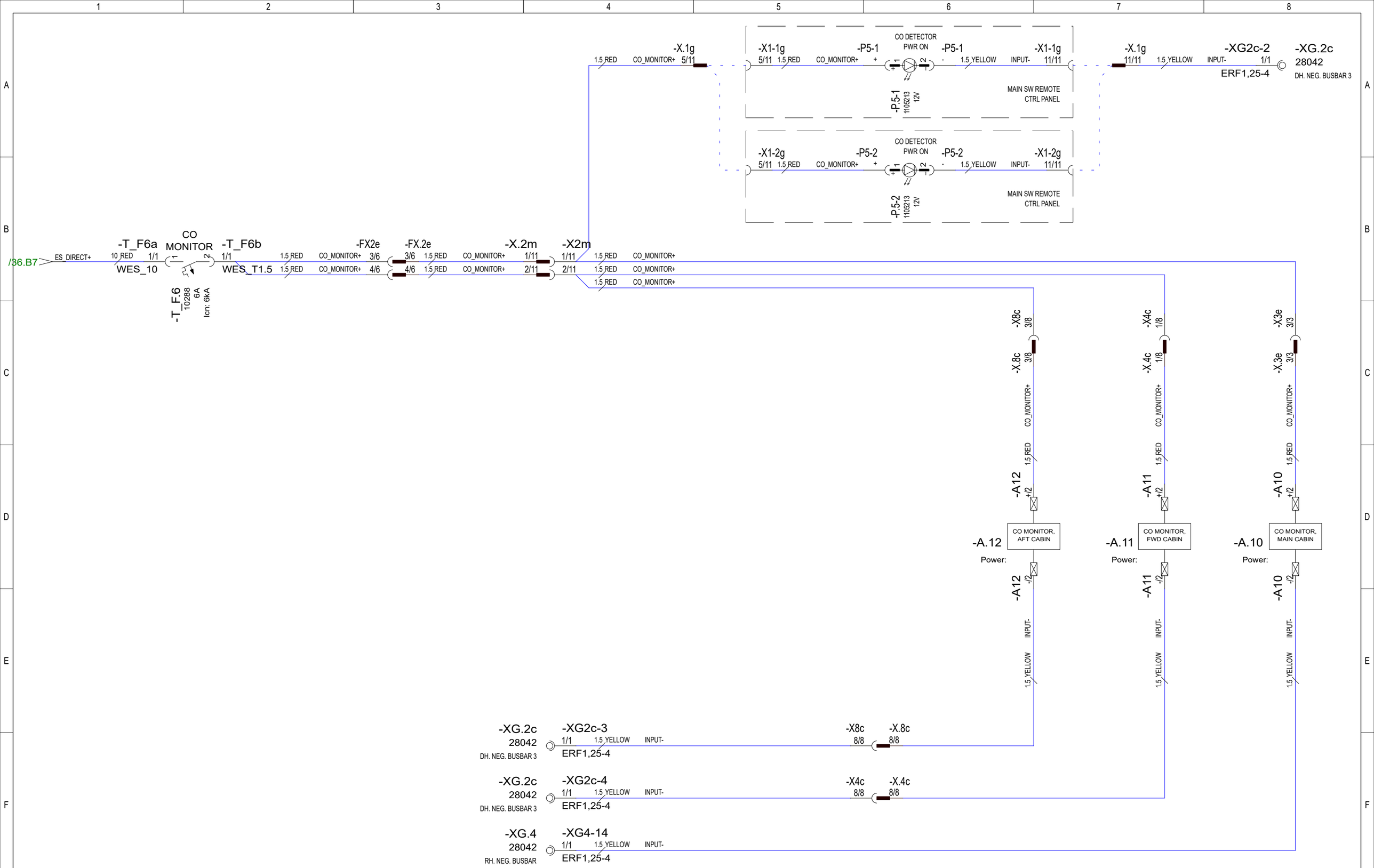

Date of modification	Modified by	Description						
28.5.2024	PF/TuM	C3: 2004890; 2005065 NOT MODIFIED	Date	30.10.2023	Axopar			
24.3.2023	TuM	A1: 2004274; NOT MODIFIED.	Drawing by	TuM				
30.3.2023	TuM	B2: 2004274; HARNESS CONNECTIONS ADDED.	Sheet rev.	3	45	DC: CO MONITORS - DIAGRAM	HL	91/ 444
			Project rev.	C	Boat model	Title	Loc	Sheet

NAVIX
Copyright by

Boat | Sub-product code | Product code | Project ID

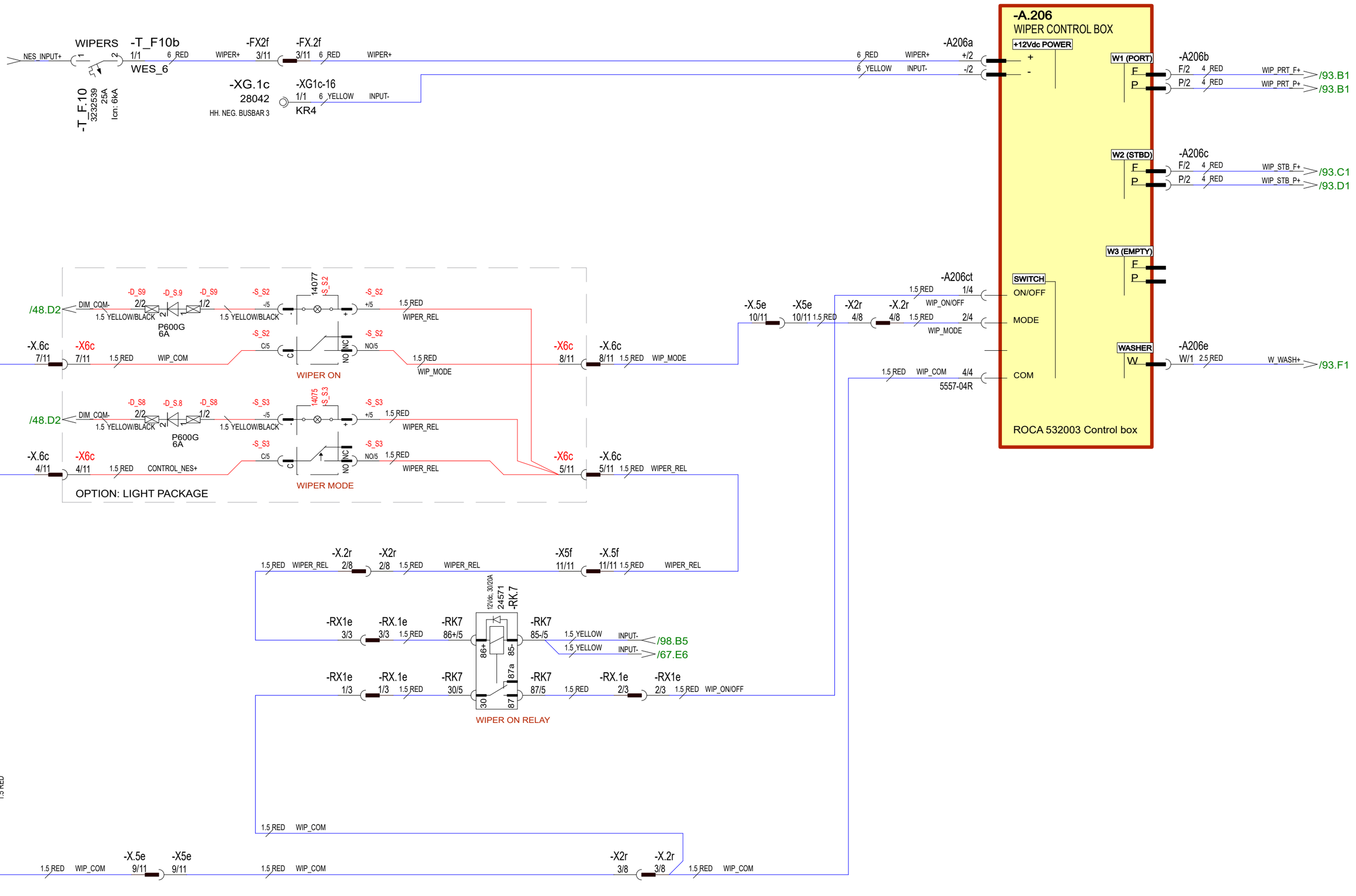

29.5.2024	TuM	C3: 2005065; SWITCHES RENAMED, LIGHT PACKAGE ADDED.	Date	30.10.2023	NAVIX	Axopar			
24.3.2023	TuM	A1: 2004274; NOT MODIFIED.	Drawing by	TuM		Boat	Sub-product code	Product code	Project ID
30.3.2023	TuM	B2: 2004274; HARNESS CONN. & WIPER CTRL BOX ADDED.	Sheet rev.	3		45	DC: WIPERS - DIAGRAM	HL	92 / 444
Date of modification	Modified by	Description	Project rev.	C	Copyright by	Boat model	Title	Loc	Sheet

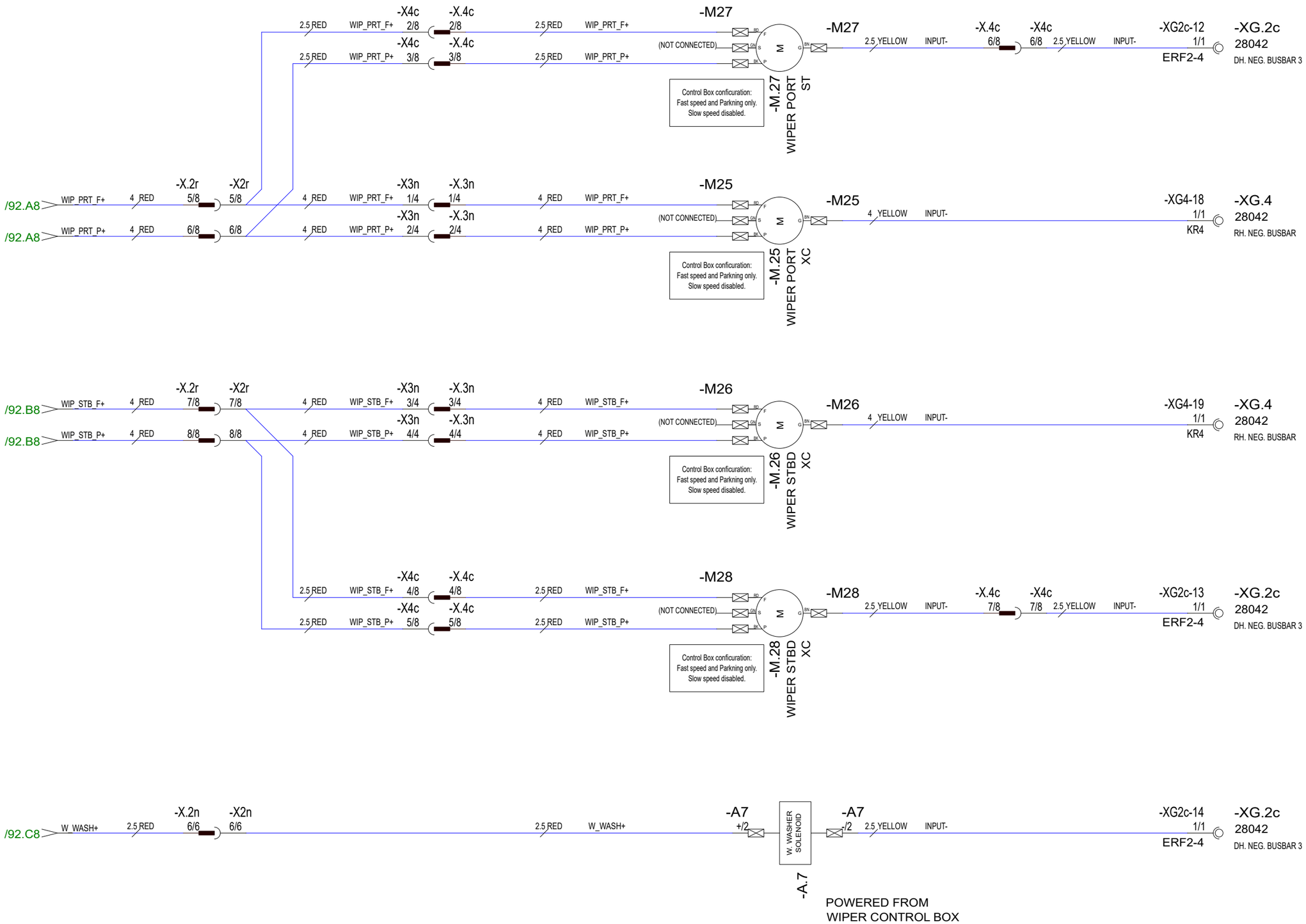

28.5.2024	PF/TuM	C3: 2004890; 2005065 NOT MODIFIED	Date	30.10.2023	NAVIX	Axopar			
24.3.2023	TuM	A1: 2004274; NOT MODIFIED.	Drawing by	TuM		Boat	Sub-product code	Product code	Project ID
27.4.2023	TuM	B2: 2004274; HARNESS CONNECTIONS ADDED.	Sheet rev.	3		45	DC: WIPERS - DIAGRAM	HL	93 / 444
Date of modification	Modified by	Description	Project rev.	C	Copyright by	Boat model	Title	Loc	Sheet

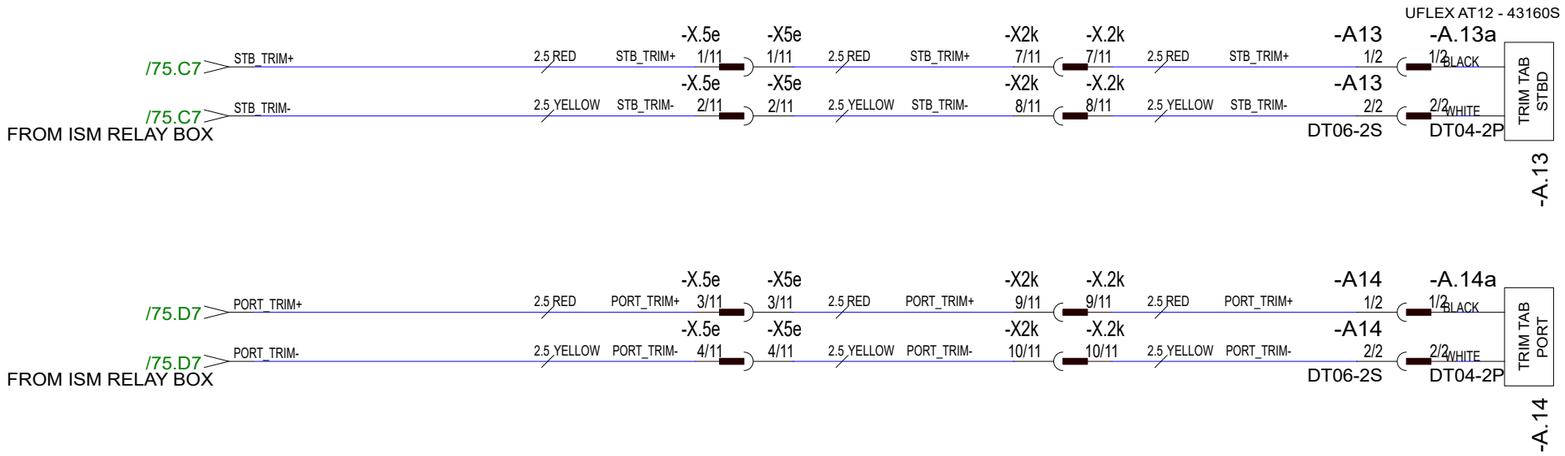

29.5.2024	PF/TuM	C3: 2004890; 2005065 NOT MODIFIED	Date 30.10.2023	NAVIX	Axopar			
24.3.2023	TuM	A1: 2004274; NOT MODIFIED.	Drawing by TuM		Boat	Sub-product code	Product code	Project ID
30.3.2023	TuM	B2: 2004274; HARNESS CONNECTIONS ADDED.	Sheet rev. 3		45	DC: TRIM TABS - DIAGRAM	HL	94 / 444
Date of modification	Modified by	Description	Project rev. C	Copyright by	Boat model	Title	Loc	Sheet

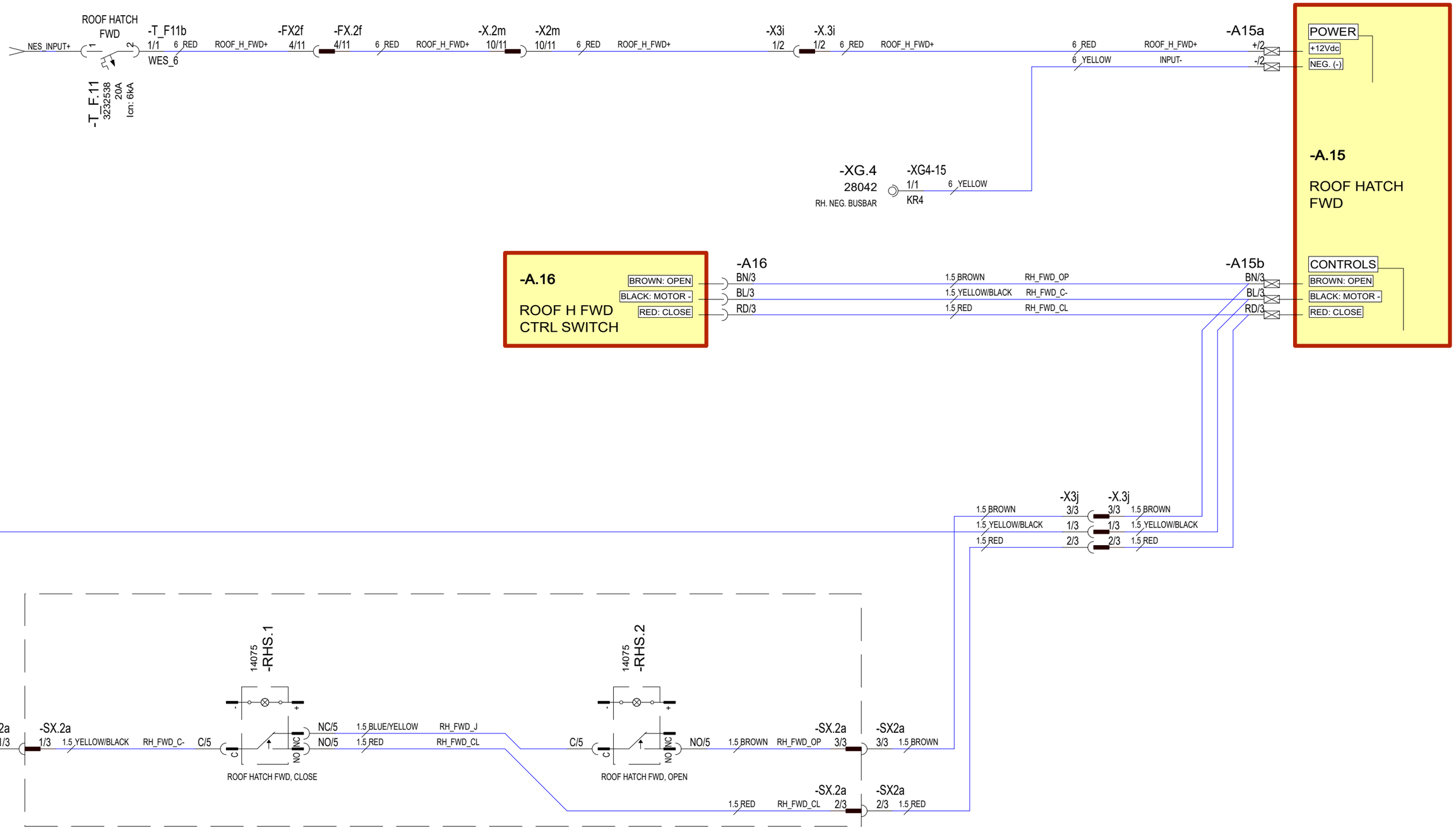

29.5.2024	PF/TuM	C3: 2004890; 2005065 NOT MODIFIED	Date 30.10.2023	NAVIX	Axopar			
24.3.2023	TuM	A1: 2004274; NOT MODIFIED.	Drawing by TuM		Boat	Sub-product code	Product code	Project ID
30.3.2023	TuM	B2: 2004274; HARNESS CONN. & ADDITIONAL ROOF HATCH SWITCHES ADDED.	Checked		45	DC: ROOF HATCH FWD - DIAGRAM	HL	95 / 444
Date of modification	Modified by	Description	Project rev. C	Copyright by	Boat model	Title	Loc	Sheet

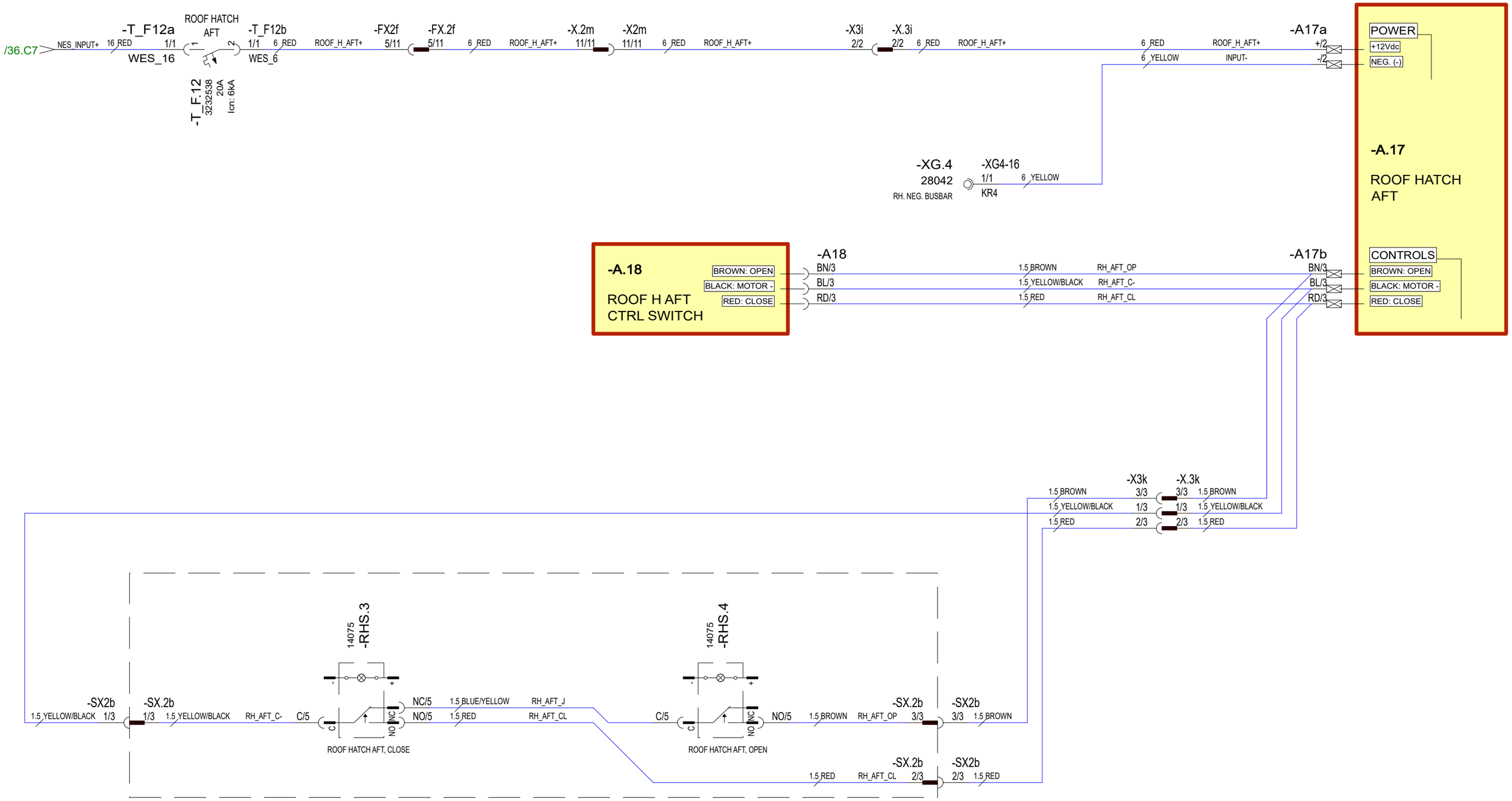

29.5.2024	PF/TuM	C3: 2004890; 2005065 NOT MODIFIED	Date 30.10.2023	NAVIX	Axopar			
24.3.2023	TuM	A1: 2004274; NOT MODIFIED.	Drawing by TuM		Boat	Sub-product code	Product code	Project ID
30.3.2023	TuM	B2: 2004274; HARNESS CONN. & ADDITIONAL ROOF HATCH SWITCHES ADDED.	Checked		45	DC: ROOF HATCH AFT - DIAGRAM	HL	96 / 444
Date of modification	Modified by	Description	Project rev. C	Copyright by	Boat model	Title	Loc	Sheet

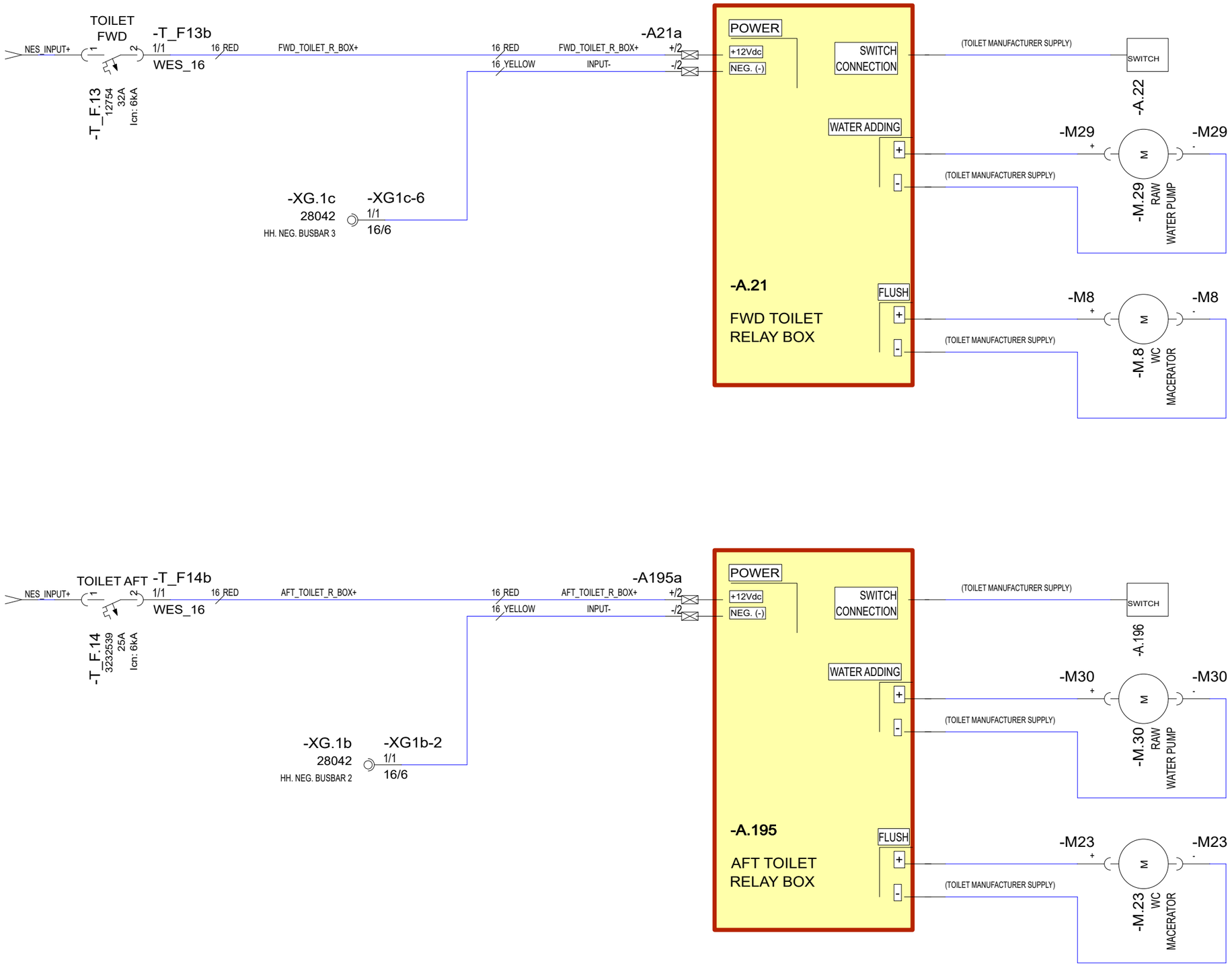

29.5.2024	PF/TuM	C3: 2004890; 2005065 NOT MODIFIED	Date	30.10.2023	NAVIX	Axopar		
24.3.2023	TuM	A1: 2004274; NOT MODIFIED.	Drawing by	TuM		Boat	Sub-product code	Product code / Project ID
30.3.2023	TuM	B2: 2004274; AFT TOILET ADDED, NEG CONN. ADDED.	Sheet rev.	3		45	DC: TOILET / MACERATOR - DIAGRAM	HL / 97 / 444
Date of modification	Modified by	Description	Project rev.	C	Copyright by	Boat model	Title	Loc / Sheet

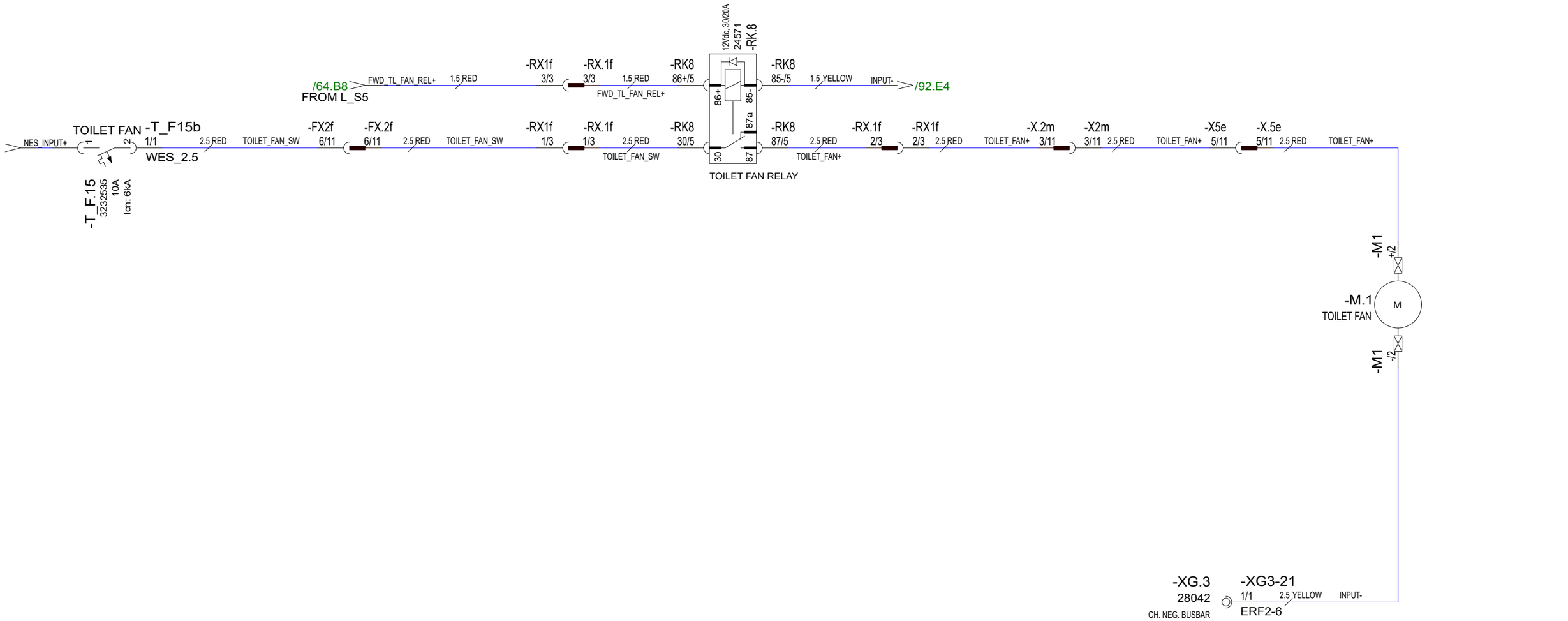

29.5.2024	PF/TuM	C3: 2004890; 2005065 NOT MODIFIED	Date 30.10.2023	NAVIX	Axopar			
24.3.2023	TuM	A1: 2004274; NOT MODIFIED.	Drawing by TuM		Boat	Sub-product code	Product code	Project ID
30.3.2023	TuM	B2: 2004274; HARNESS CONNECTIONS ADDED.	Sheet rev. 3		45	DC: TOILET FAN - DIAGRAM	HL	98 / 444
Date of modification	Modified by	Description	Project rev. C	Copyright by	Boat model	Title	Loc	Sheet

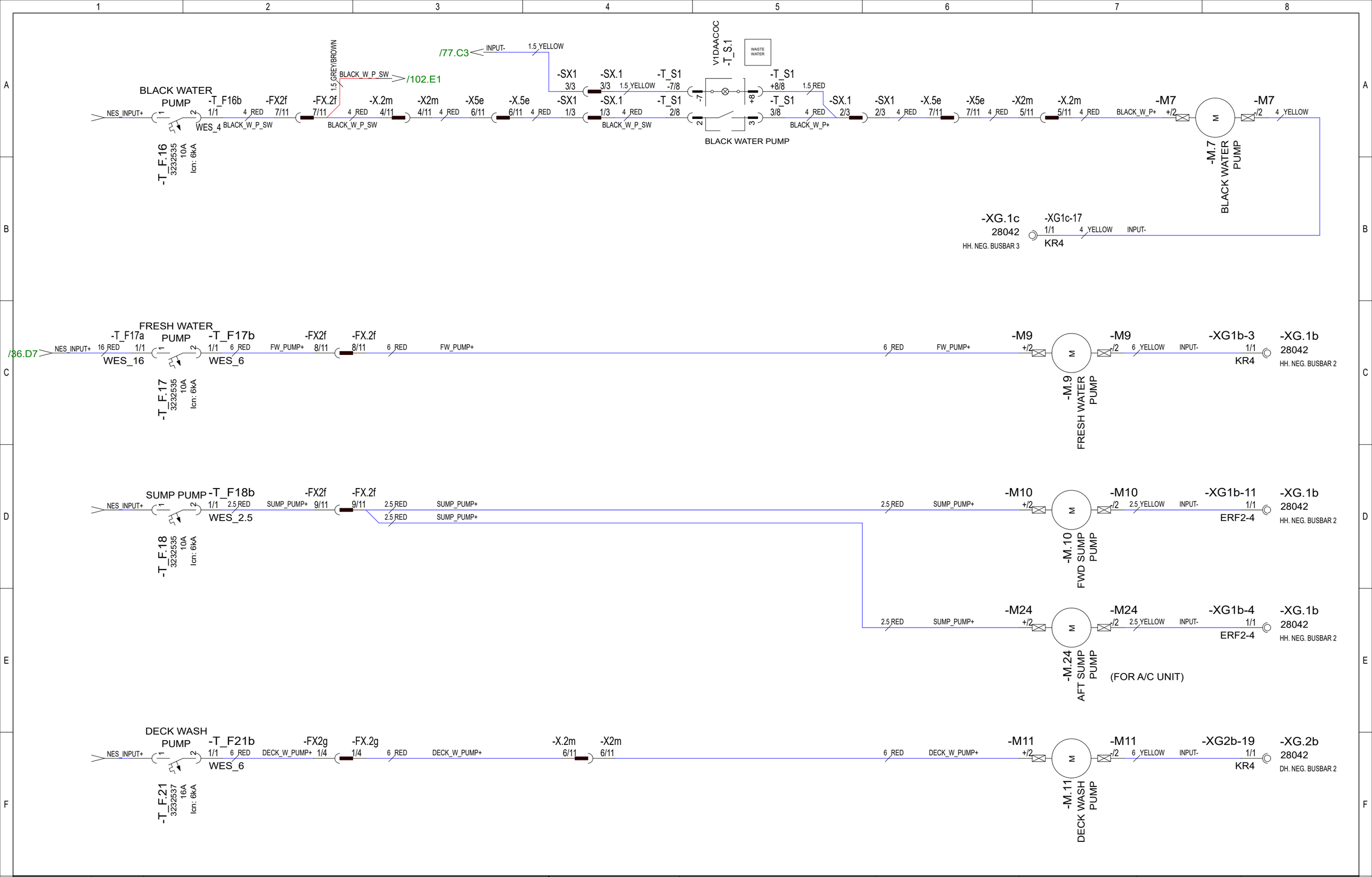

29.5.2024	PF/TuM	C3: 2004890; 2005065 NOT MODIFIED	Date	30.10.2023	NAVIX	Axopar			
24.3.2023	TuM	A1: 2004274; NOT MODIFIED.	Drawing by	TuM		Boat	Sub-product code	Product code	Project ID
30.3.2023	TuM	B2: 2004274; HARNESS CONNECTIONS ADDED.	Sheet rev.	3		45	DC: PUMPS - DIAGRAM	HL	99 / 444
Date of modification	Modified by	Description	Project rev.	C	Copyright by	Boat model	Title	Loc	Sheet

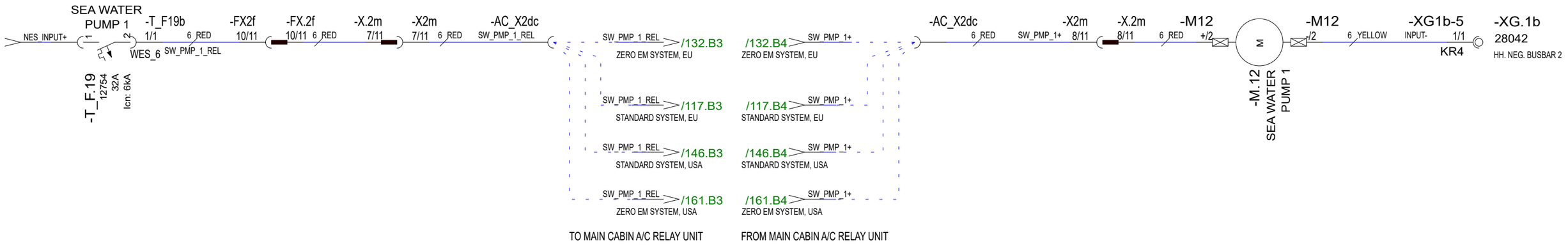

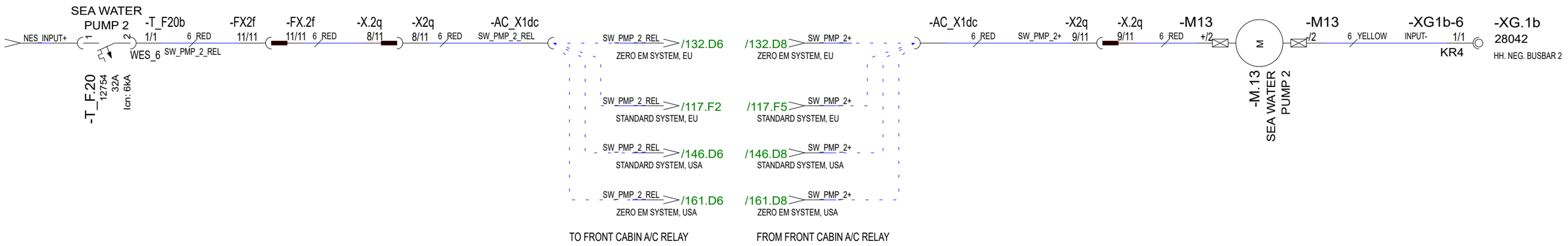

29.5.2024	PF/TuM	C3: 2004890; 2005065 NOT MODIFIED	Date	30.10.2023	NAVIX	Axopar			
24.3.2023	TuM	A1: 2004274; NOT MODIFIED.	Drawing by	TuM		Boat	Sub-product code	Product code	Project ID
30.3.2023	TuM	B2: 2004274; HARNESS CONNECTIONS ADDED.	Sheet rev.	3		45	DC: PUMPS - DIAGRAM	HL	100 / 444
Date of modification	Modified by	Description	Project rev.	C	Copyright by	Boat model	Title	Loc	Sheet

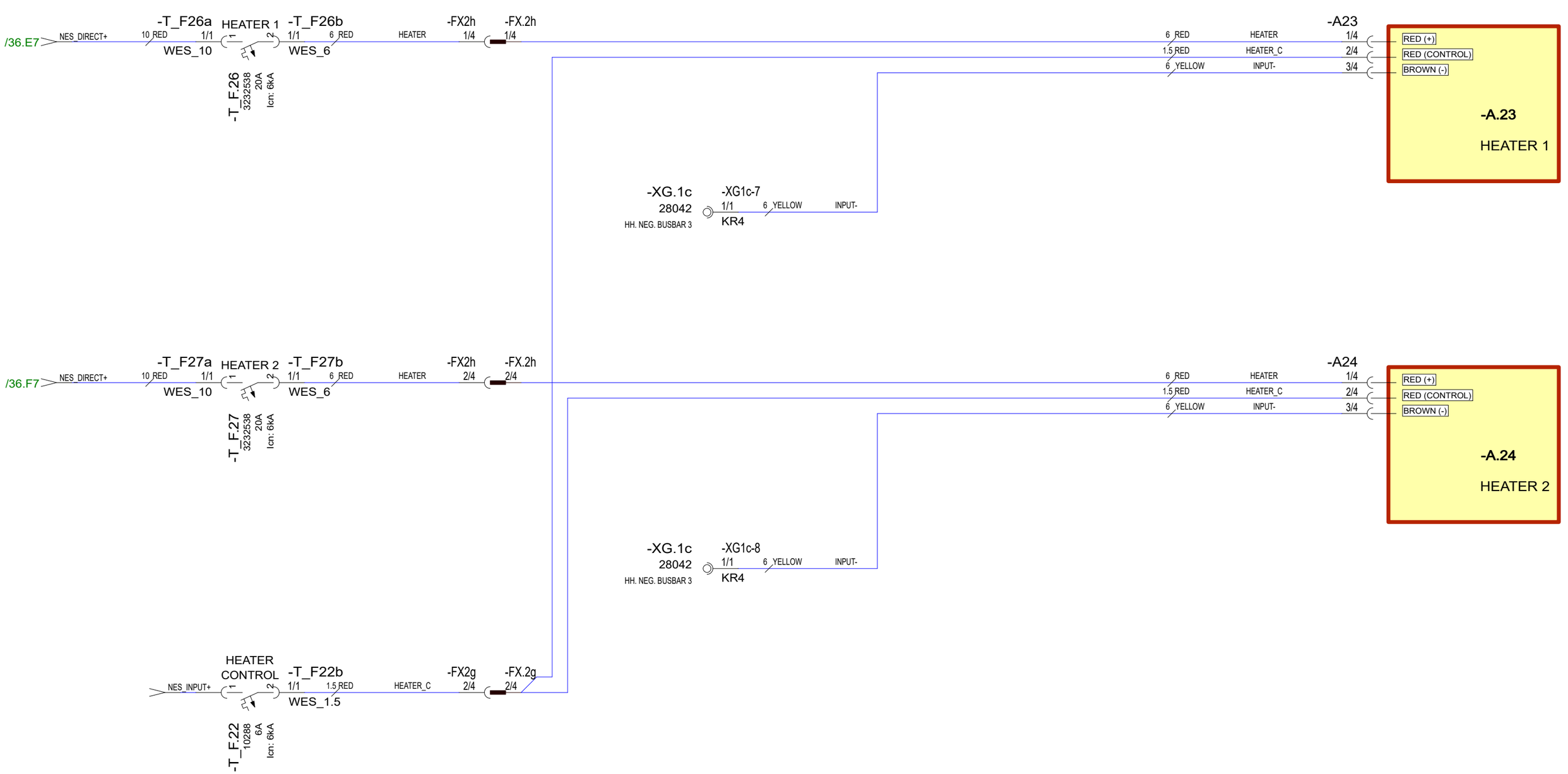

29.5.2024	PF/TuM	C3: 2004890; 2005065 NOT MODIFIED	Date	30.10.2023	NAVIX	Axopar			
24.3.2023	TuM	A1: 2004274; NOT MODIFIED.	Drawing by	TuM		Boat	Sub-product code	Product code	Project ID
30.3.2023	TuM	B2: 2004274; HARNESS CONNECTIONS ADDED.	Sheet rev.	3		45	DC: HEATERS - DIAGRAM	HL	101/ 444
Date of modification	Modified by	Description	Project rev.	C	Copyright by	Boat model	Title	Loc	Sheet

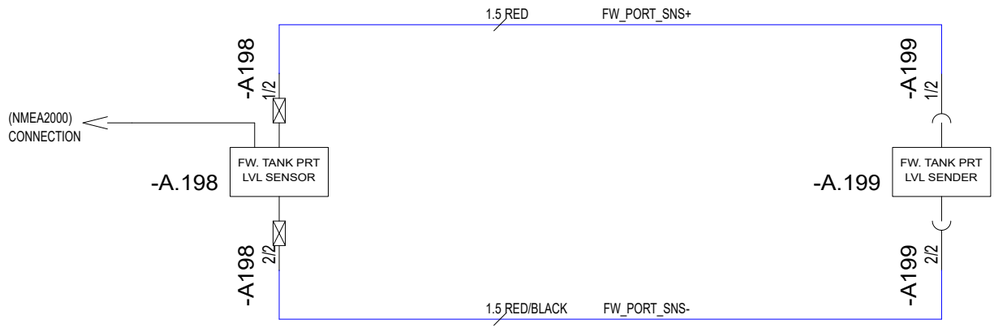

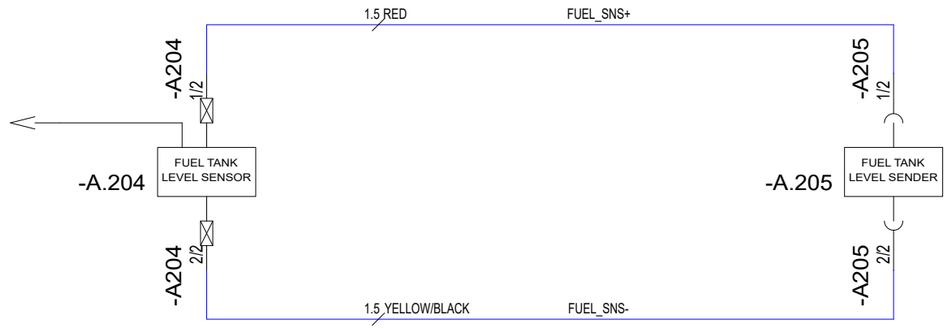

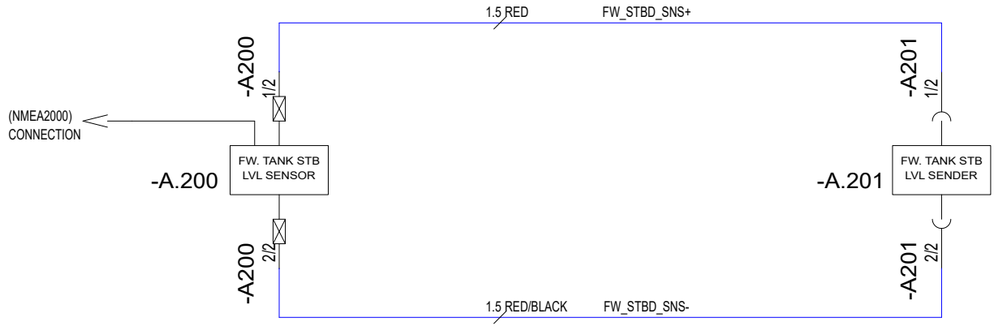

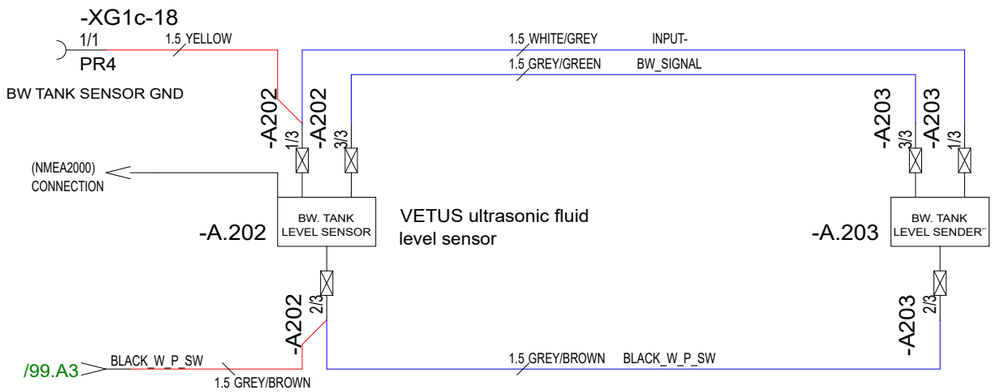

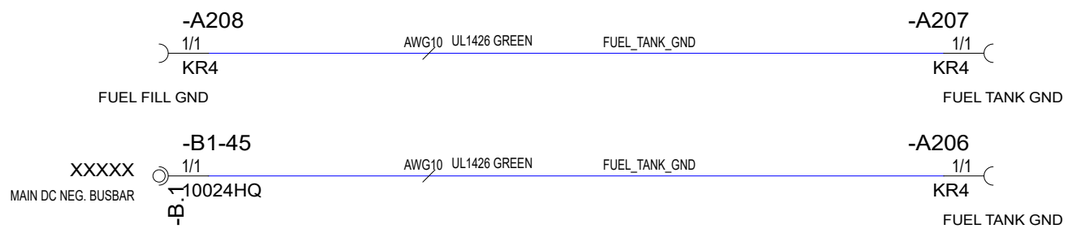

30.10.2023	PF	C3: 2004890; BW tank sensor A203	Date	30.10.2023	NAVIX	Axopar			
24.3.2023	TuM	A1: 2004274; NOT MODIFIED.	Drawing by	TuM		Boat	Sub-product code	Product code	Project ID
24.4.2023	TuM	B2: 2004274; LEVEL SENSORS & FUEL TANK GND SYSTEMS ADDED.	Sheet rev.	3		45	DC: SENSORS/ FUEL TANK GND - DIAGRAM	HL	102 / 444
Date of modification	Modified by	Description	Project rev.	C	Copyright by	Boat model	Title	Loc	Sheet

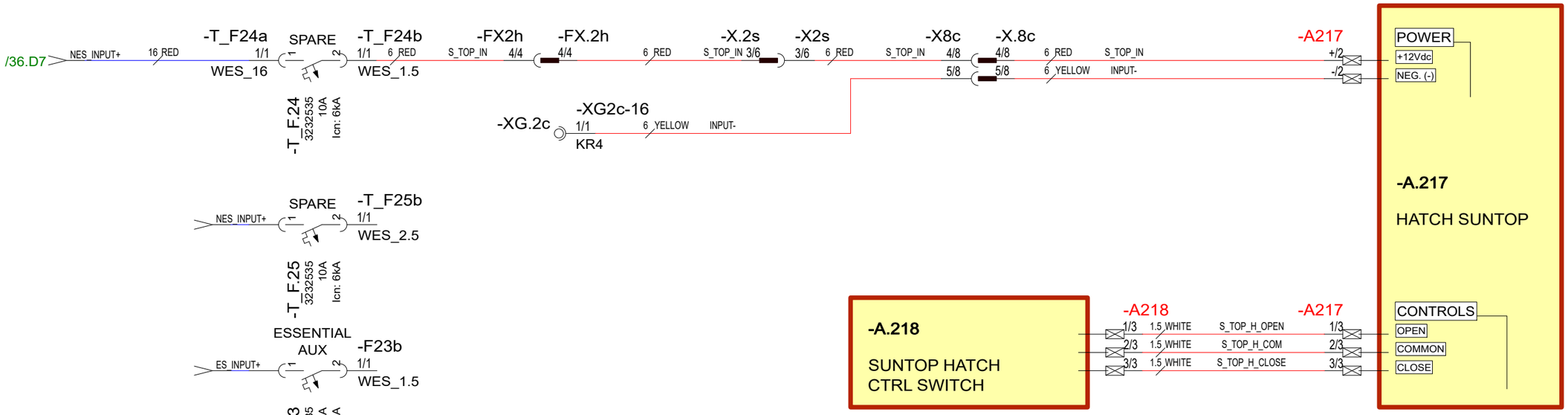

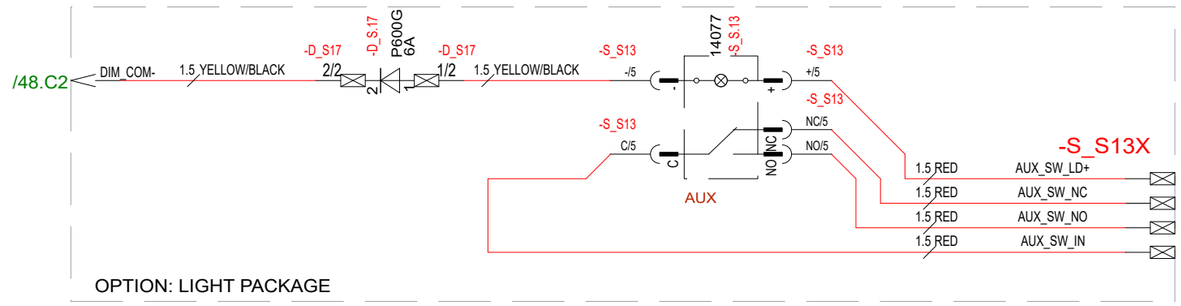

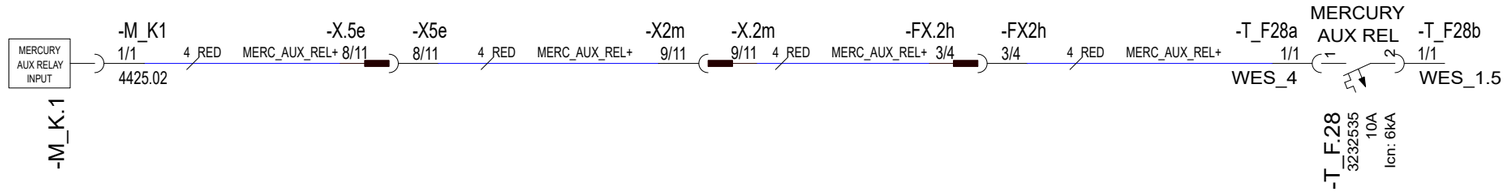

29.5.2024	TuM	C3: 2005065; AUX SW AND LIGHT PACK. ADDED.	Date	30.10.2023	NAVIX	Axopar		
24.3.2023	TuM	A1: 2004274; NOT MODIFIED.	Drawing by	TuM		Boat	Sub-product code	Product code / Project ID
30.3.2023	TuM	B2: 2004274; HARNESS CONNECTIONS ADDED.	Sheet rev.	3		45	DC: SPARE/ MERCURY AUX - DIAGRAM	HL
Date of modification	Modified by	Description	Project rev.	C	Copyright by	Boat model	Title	Loc / 103 / 444 Sheet

AC-SYSTEMS - EU

STANDARD

Date of modification	Modified by	Description		
30.10.2023	PF	C3: 2004890; NOT MODIFIED	Date	30.10.2023
24.3.2023	TuM	A1: 2004274; NOT MODIFIED.	Drawing by	TuM
30.3.2023	TuM	B2: 2004274;	Sheet rev.	3
			Project rev.	C

Copyright by NAVIX

Boat	Sub-product code	Product code	Project ID	
Axopar				
Boat model	Title		Loc	Sheet
45	----- AC-SYSTEMS - EU ----- STANDARD		HL	104 / 444

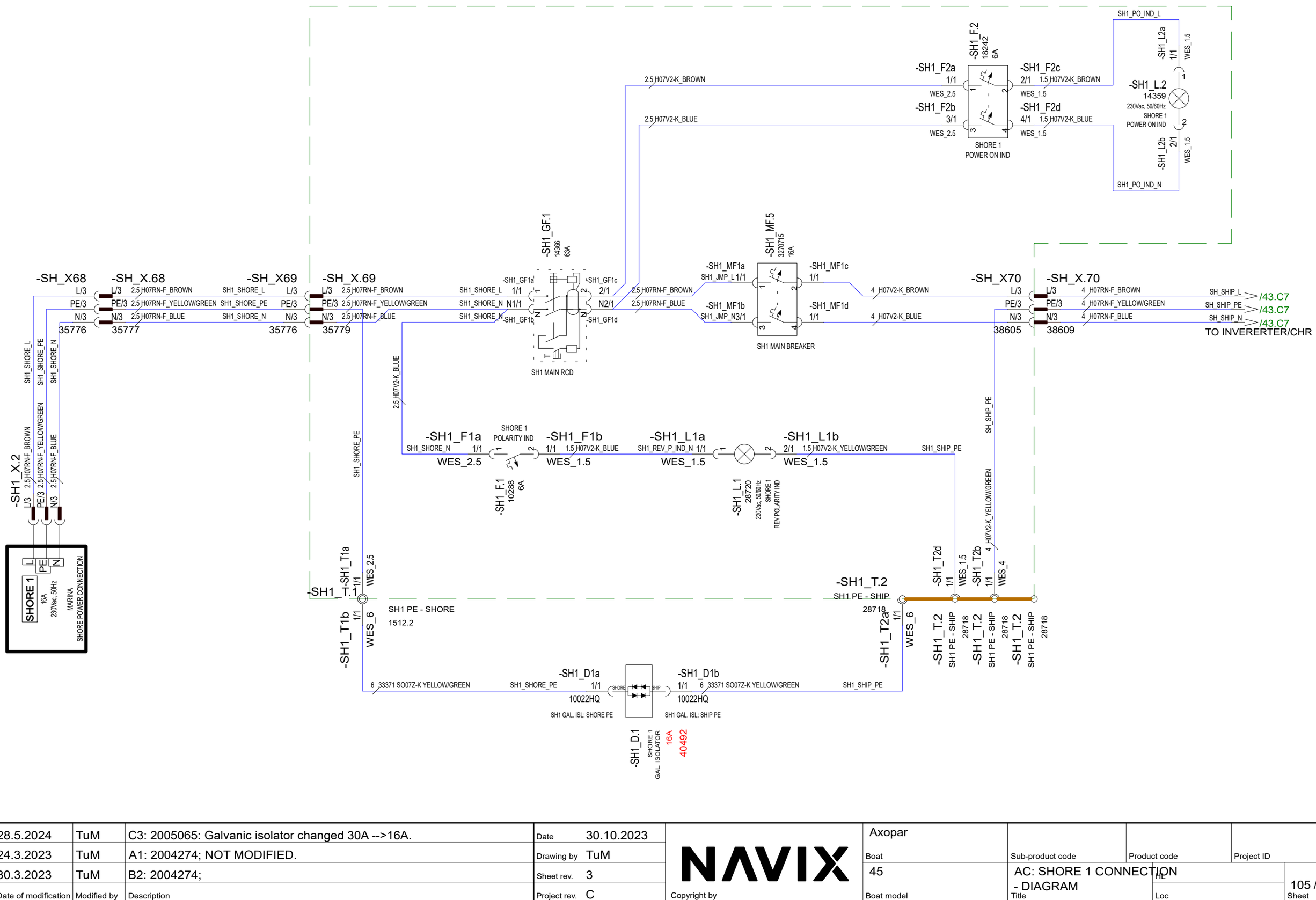

28.5.2024	TuM	C3: 2005065: Galvanic isolator changed 30A -->16A.	Date	30.10.2023	NAVIX	Axopar			
24.3.2023	TuM	A1: 2004274; NOT MODIFIED.	Drawing by	TuM		Boat	Sub-product code	Product code	Project ID
30.3.2023	TuM	B2: 2004274;	Sheet rev.	3		45	AC: SHORE 1 CONNECTION - DIAGRAM		
Date of modification	Modified by	Description	Project rev.	C	Copyright by	Boat model	Title	Loc	105 / 444 Sheet

ONLY WITH AIRCON OPTION

-SH_X71 L/3 PE/3 N/3 35776

-SH_X.71 L/3 PE/3 N/3 35777

2.5 H07RN-F_BROWN
2.5 H07RN-F_YELLOW/GREEN
2.5 H07RN-F_BLUE

-SH_X72 L/3 PE/3 N/3 35776

-SH_X.72 L/3 PE/3 N/3 35779

2.5 H07V2-K_BROWN
2.5 H07V2-K_YELLOW/GREEN
2.5 H07V2-K_BLUE

SH2_SHORE_L
SH2_SHORE_PE
SH2_SHORE_N

-SH2_GF.1 14366 63A

-SH2_GF1a 1/1
-SH2_GF1b N1/1
-SH2_GF1c 2/1
-SH2_GF1d N2/1

SH2 MAIN RCD

-SH2_MF.1 3270715 16A

-SH2_MF1a SH2_JMP_L 1/1
-SH2_MF1b SH2_JMP_N 3/1
-SH2_MF1c 2/1 4 H07V2-K_BROWN
-SH2_MF1d 4/1 4 H07V2-K_BLUE

SH2 MAIN BREAKER

SH2_SHIP_L
SH2_SHIP_N

-SH2_X73 L/3 PE/3 N/3 38605

-SH2_X.73 L/3 PE/3 N/3 38609

4 H07RN-F_BROWN
4 H07RN-F_YELLOW/GREEN
4 H07RN-F_BLUE

SH2_SHIP_L /107.B1
SH2_SHIP_PE /107.B1
SH2_SHIP_N /107.B1

TO WFU SHORE 2

SH2_PO_IND_L
SH2_PO_IND_N

-SH2_F.2 18242 6A

-SH2_F2a 1/1 WES_2.5
-SH2_F2b 3/1 WES_2.5
-SH2_F2c 2/1 1.5 H07V2-K_BROWN WES_1.5
-SH2_F2d 4/1 1.5 H07V2-K_BLUE WES_1.5

SHORE 2 POWER ON IND

-SH2_L.2 14359 230Vac, 50/60Hz SHORE 2 POWER ON IND

-SH2_L2a 1/1 WES_1.5
-SH2_L2b 2/1 WES_1.5

-SH2_X.2 L/3 PE/3 N/3
2.5 H07RN-F_BROWN
2.5 H07RN-F_YELLOW/GREEN
2.5 H07RN-F_BLUE

SHORE 2 16A 230Vac, 50Hz
L PE N
MARINA SHORE POWER CONNECTION

-SH2_T.1 SH2 PE - SHORE 1512.2

-SH2_T3a- 1/1 WES_2.5
-SH2_T3b- 1/1 WES_6

2.5 H07V2-K_YELLOW/GREEN

SHORE 2 REV POLARITY IND

-SH2_F1a SH2_SHORE_N 1/1 WES_2.5
-SH2_F1b 1/1 1.5 H07V2-K_BLUE WES_1.5

-SH2_F.1 10288 6A

-SH2_L1a SH2_REV_P_IND_N 1/1 WES_1.5
-SH2_L1b 2/1 1.5 H07V2-K_YELLOW/GREEN WES_1.5

-SH2_L.1 28720 230Vac, 50/60Hz SHORE 2 REV POLARITY IND

-SH2_T2c 1/1 WES_1.5
-SH2_T2b 1/1 4 H07RN-F_YELLOW/GREEN WES_4
-SH2_T2a 1/1 WES_6

-SH2_T.2 SH2 PE - SHIP 28718

-SH2_T.2 SH2 PE - SHIP 28718

6 33371 SO07Z-K YELLOW/GREEN
SH2_SHORE_PE
SH2_SHIP_PE

-SH2_D1a 1/1 10022HQ SH2 GAL. ISL: SHORE PE
-SH2_D1b 1/1 10022HQ SH2 GAL. ISL: SHIP PE

SHORE
SHIP

-SH2_D.1 SHORE 2 GAL. ISOLATOR 16A 40492

28.5.2024	TuM	C3: 2005065: Galvanic isolator changed 30A -->16A.	Date	30.10.2023	NAVIX	Axopar			
24.3.2023	TuM	A1: 2004274; NOT MODIFIED.	Drawing by	TuM		Boat	Sub-product code	Product code	Project ID
30.3.2023	TuM	B2: 2004274;	Sheet rev.	3		45	AC: SHORE 2 CONNECTION - DIAGRAM		
Date of modification	Modified by	Description	Project rev.	C	Copyright by	Boat model	Title	Loc	106 / 444 Sheet

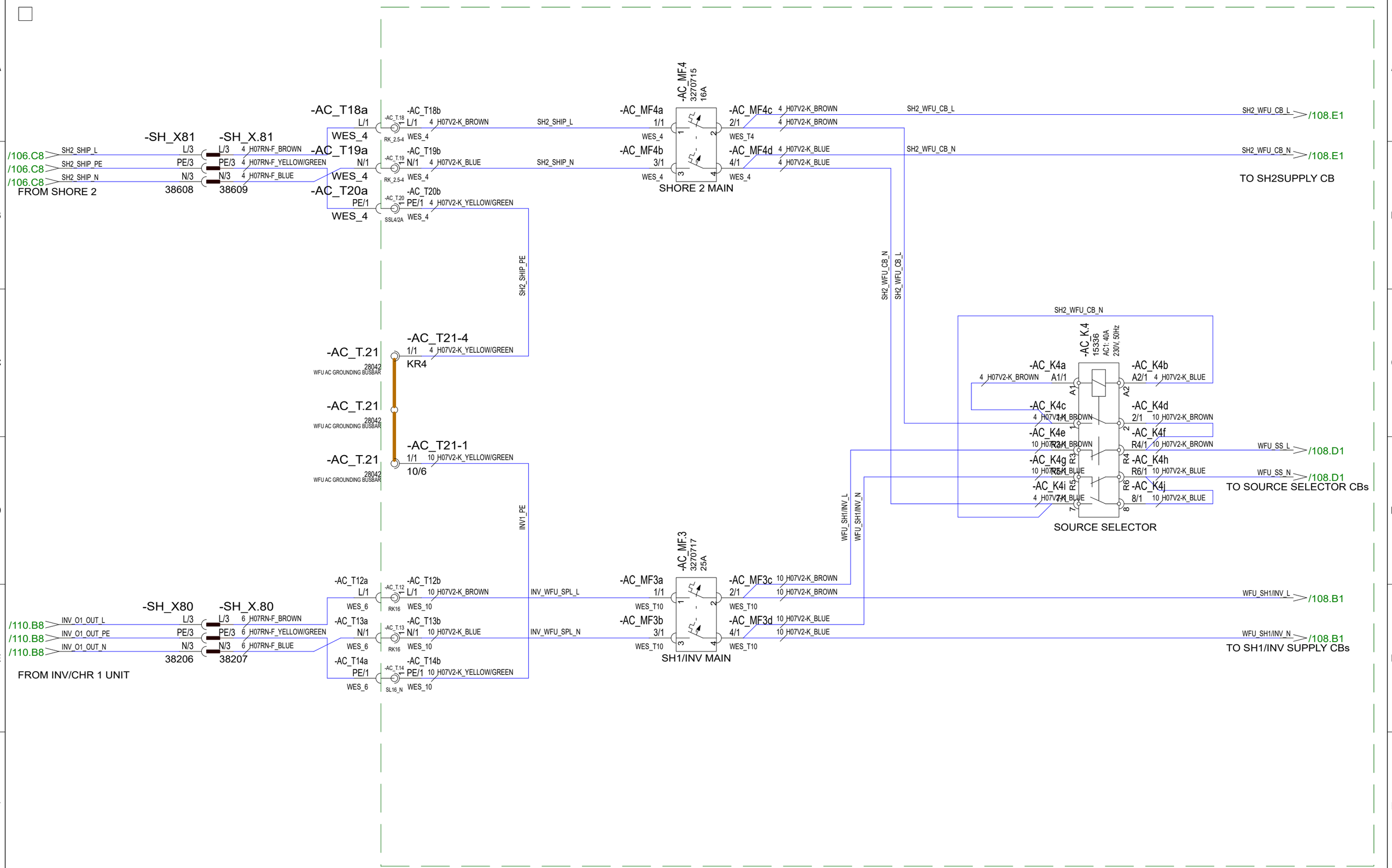

30.10.2023	PF	C3: 2004890; NOT MODIFIED	Date	30.10.2023	NAVIX	Axopar			
24.3.2023	TuM	A1: 2004274; NOT MODIFIED.	Drawing by	TuM		Boat	Sub-product code	Product code	Project ID
30.3.2023	TuM	B2: 2004274;	Sheet rev.	3		45	AC: AC DISTRIBUTION BRK, EU - DIAGRAM	HL	107 / 444
Date of modification	Modified by	Description	Project rev.	C	Copyright by	Boat model	Title	Loc	Sheet

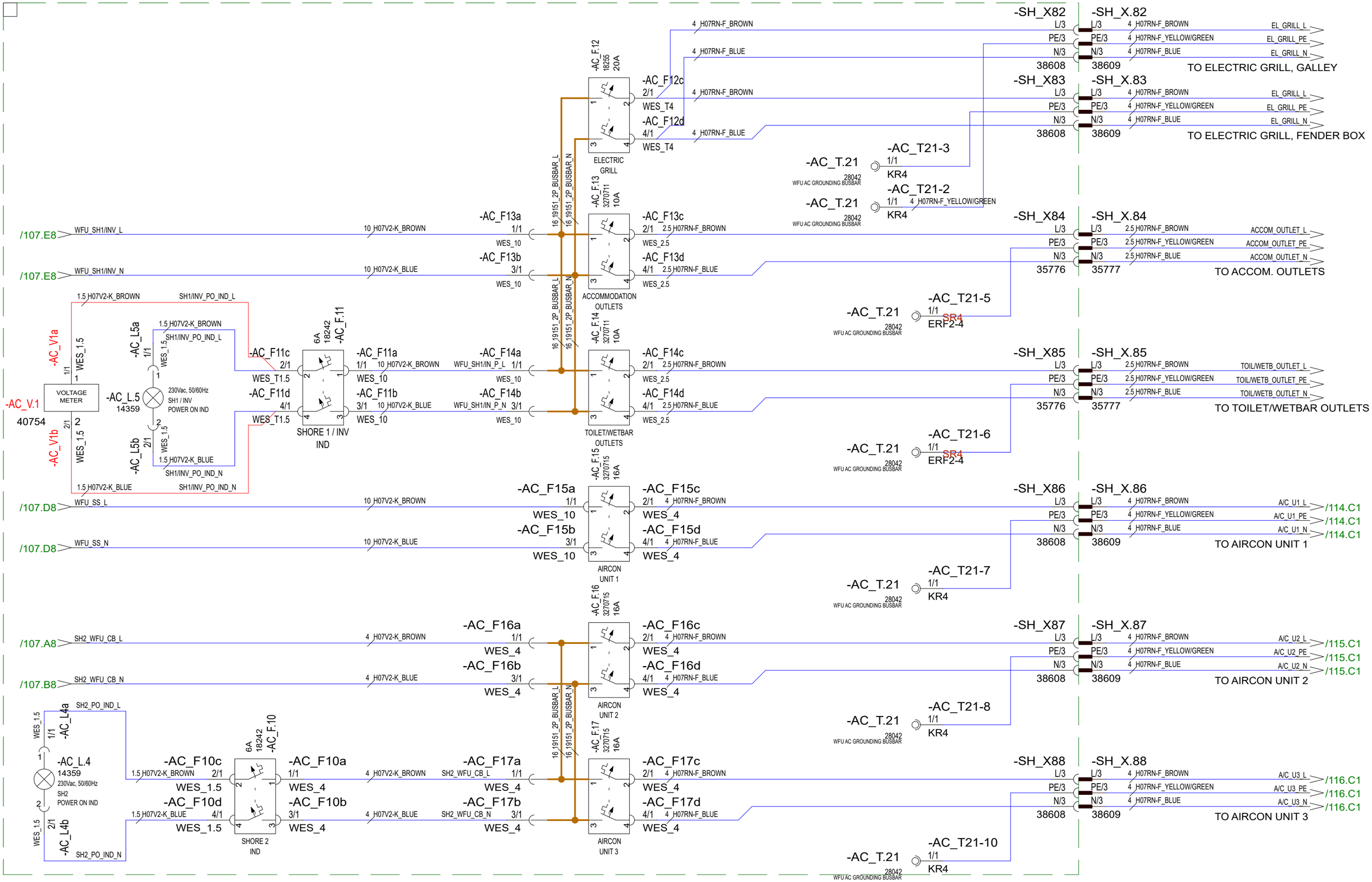

30.5.2024	TuM	C3: 2005065; Voltage meter AC_V1 added.	Date	30.10.2023	NAVIX	Axopar			
24.3.2023	TuM	A1: 2004274; NOT MODIFIED.	Drawing by	TuM		Boat	Sub-product code	Product code	Project ID
30.3.2023	TuM	B2: 2004274;	Sheet rev.	3		45	AC: AC DISTRIBUTION BRK, EU - DIAGRAM	HL	108 / 444
Date of modification	Modified by	Description	Project rev.	C	Copyright by	Boat model	Title	Loc	Sheet

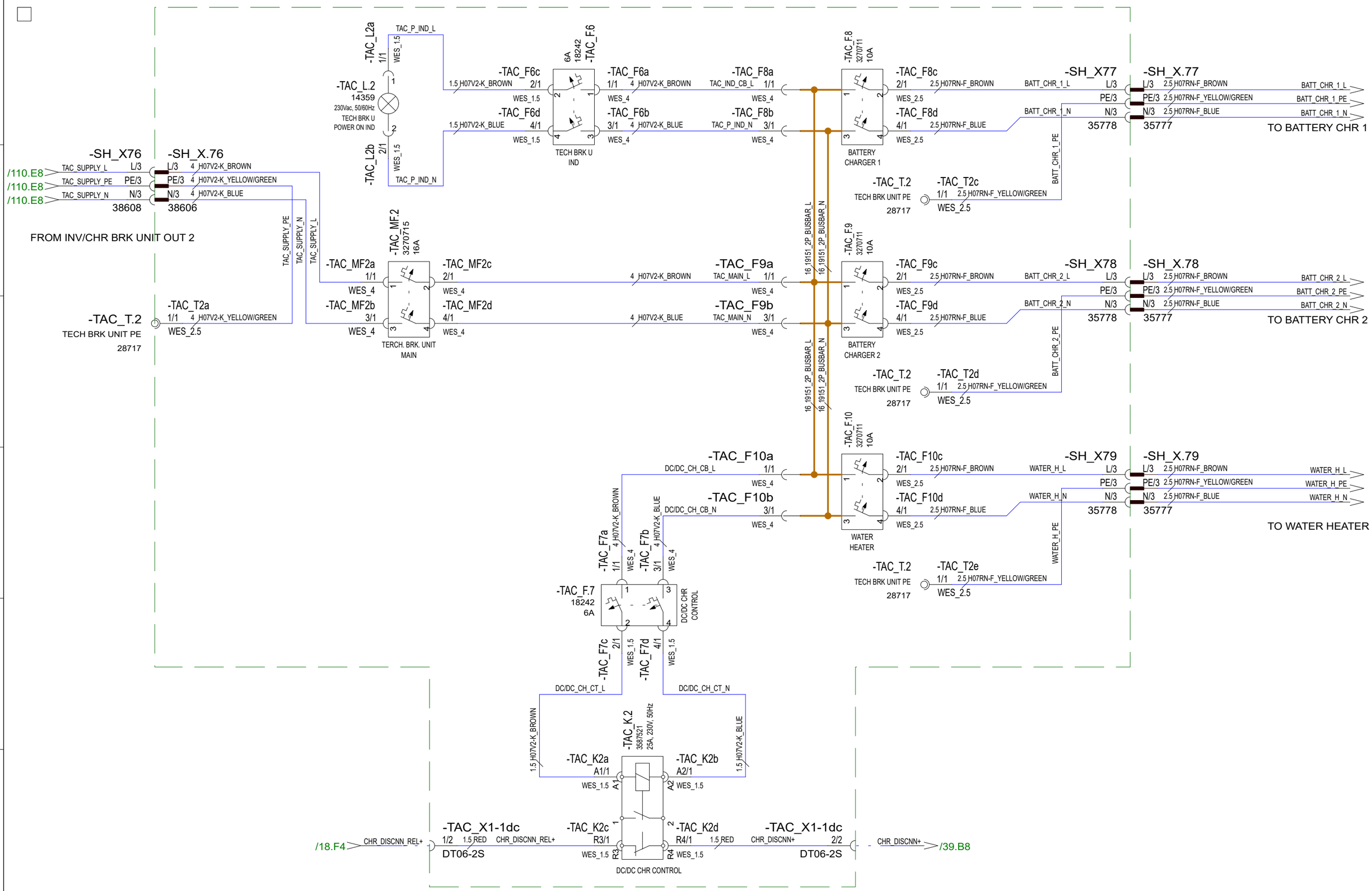

30.10.2023	PF	C3: 2004890; NOT MODIFIED	Date	30.10.2023	NAVIX	Axopar			
24.3.2023	TuM	A1: 2004274; NOT MODIFIED.	Drawing by	TuM		Boat	Sub-product code	Product code	Project ID
30.3.2023	TuM	B2: 2004274;	Sheet rev.	3		45	AC: TECH. AC DISTR BRK UNIT - EU	HL	109 / 444
Date of modification	Modified by	Description	Project rev.	C	Copyright by	Boat model	Title	Loc	Sheet

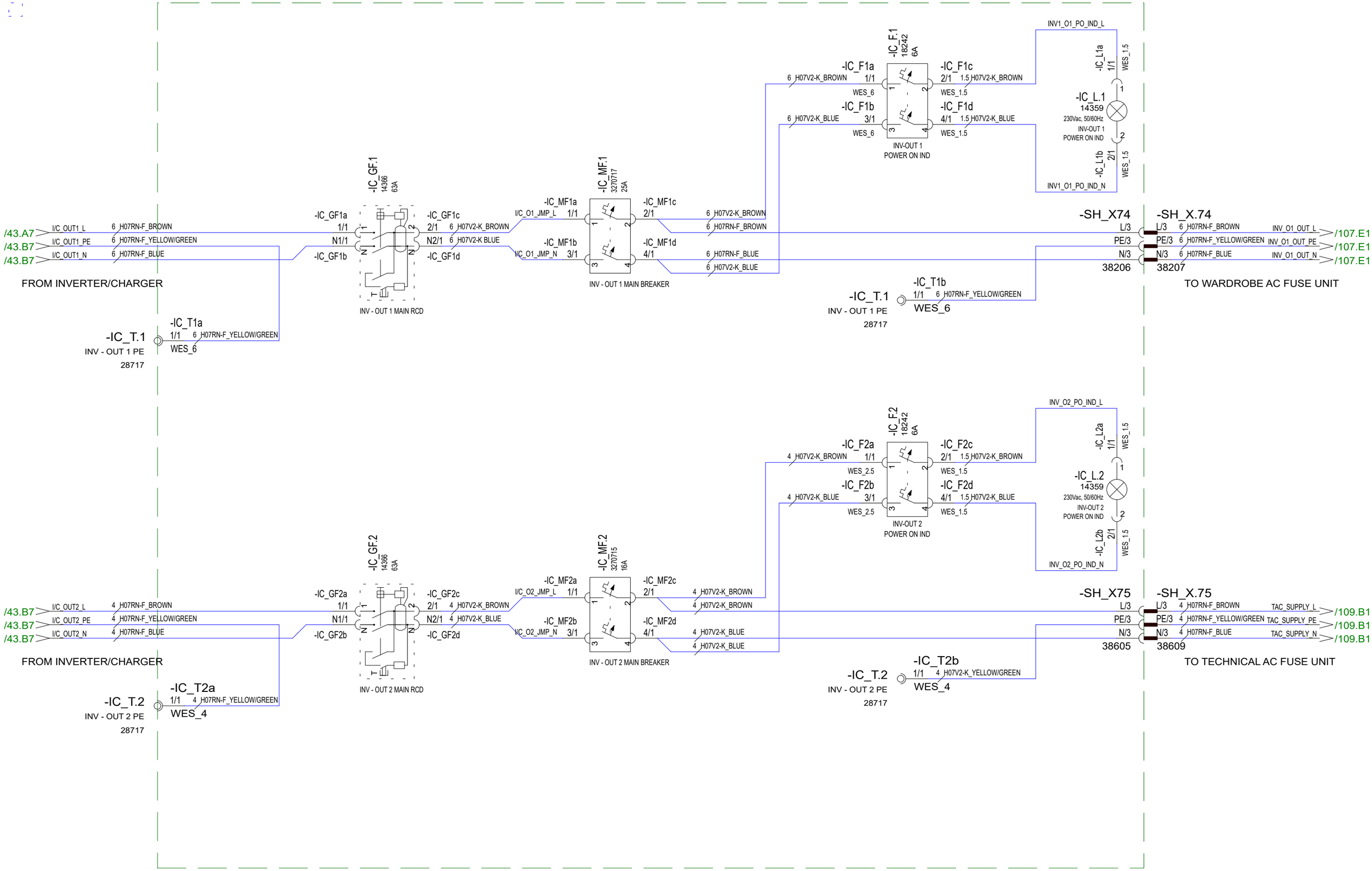

Date of modification	Modified by	Description
30.10.2023	PF	C3: 2004890; NOT MODIFIED
24.3.2023	TuM	A1: 2004274; NOT MODIFIED.
30.3.2023	TuM	B2: 2004274;

Date	30.10.2023
Drawing by	TuM
Sheet rev.	3
Project rev.	C

Copyright by

Boat	Sub-product code	Product code	Project ID
Axopar			
Boat model	**Title**	**Loc**	**Sheet**
45	AC: INVERTER MAIN BRK UNIT, EU - DIAGRAM	HL	110 / 444

Date of modification	Modified by	Description							
30.10.2023	PF	C3: 2004890; NOT MODIFIED	Date	30.10.2023	Copyright by	Axopar			
24.3.2023	TuM	A1: 2004274; NOT MODIFIED.	Drawing by	TuM		Boat	Sub-product code	Product code	Project ID
30.3.2023	TuM	B2: 2004274;	Sheet rev.	3		45	AC: SOCKETS, EU - DIAGRAM	HL	111/ 444
			Project rev.	C		Boat model	Title	Loc	Sheet

Date of modification	Modified by	Description							
30.10.2023	PF	C3: 2004890; NOT MODIFIED	Date	30.10.2023	Copyright by	Axopar			
24.3.2023	TuM	A1: 2004274; NOT MODIFIED.	Drawing by	TuM		Boat	Sub-product code	Product code	Project ID
30.3.2023	TuM	B2: 2004274;	Sheet rev.	3		45	AC: WATER HEATER, EU - DIAGRAM	HL	112 / 444
			Project rev.	C		Boat model	Title	Loc	Sheet

WETBAR
GRILL

FENDEX BOX GRILL
GRILL

30.10.2023	PF	C3: 2004890; NOT MODIFIED	Date	30.10.2023	Copyright by	Axopar			
24.3.2023	TuM	A1: 2004274; NOT MODIFIED.	Drawing by	TuM		Boat	Sub-product code	Product code	Project ID
30.3.2023	TuM	B2: 2004274;	Sheet rev.	3		45	AC: ELECTRICAL GRILL, EU - DIAGRAM	HL	113 / 444
Date of modification	Modified by	Description	Project rev.	C		Boat model	Title	Loc	Sheet

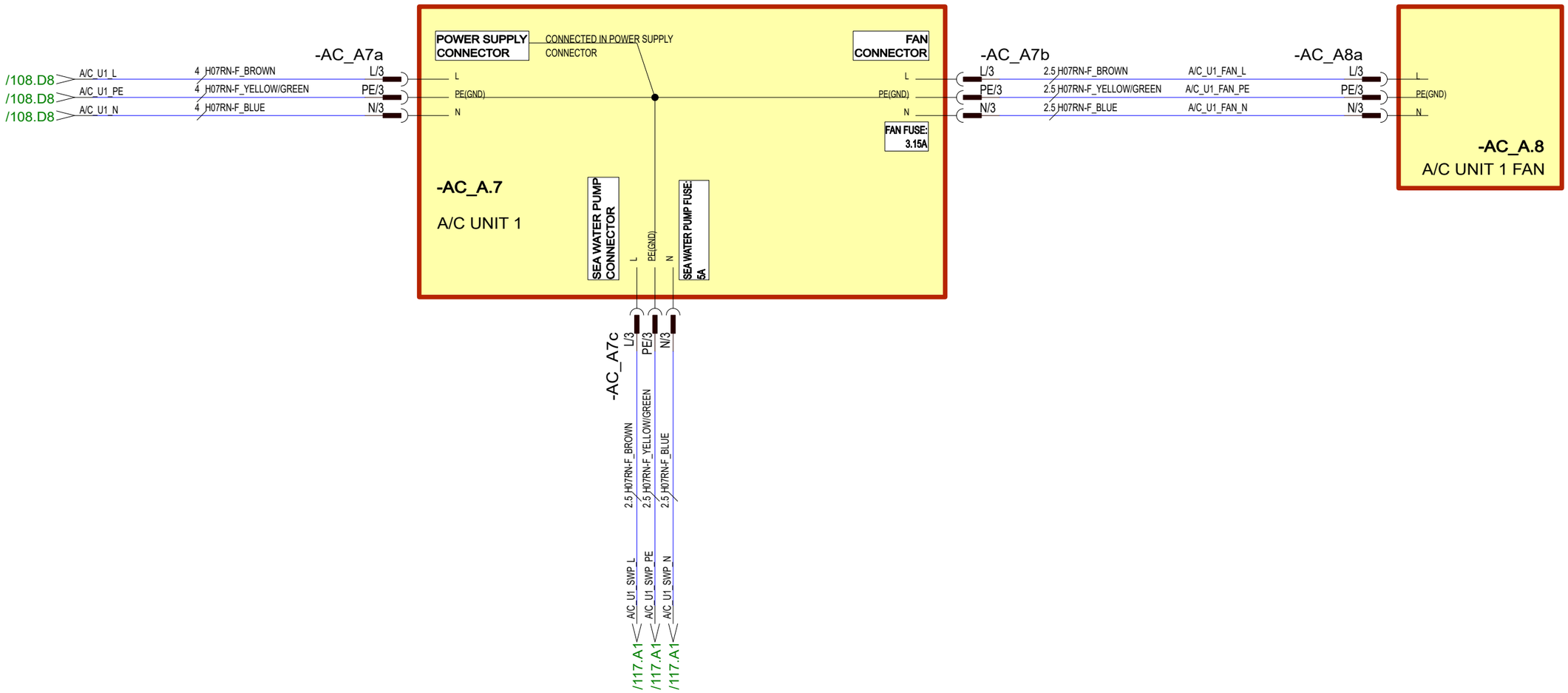

30.10.2023	PF	C3: 2004890; NOT MODIFIED	Date	30.10.2023	NAVIX	Axopar				
24.3.2023	TuM	A1: 2004274; NOT MODIFIED.	Drawing by	TuM						
30.3.2023	TuM	B2: 2004274;	Sheet rev.	3		45	AC: A/C UNIT 1, EU - DIAGRAM	HL	114 / 444	
Date of modification	Modified by	Description	Project rev.	C	Copyright by	Boat model	Title	Loc	Sheet	

Boat | Sub-product code | Product code | Project ID

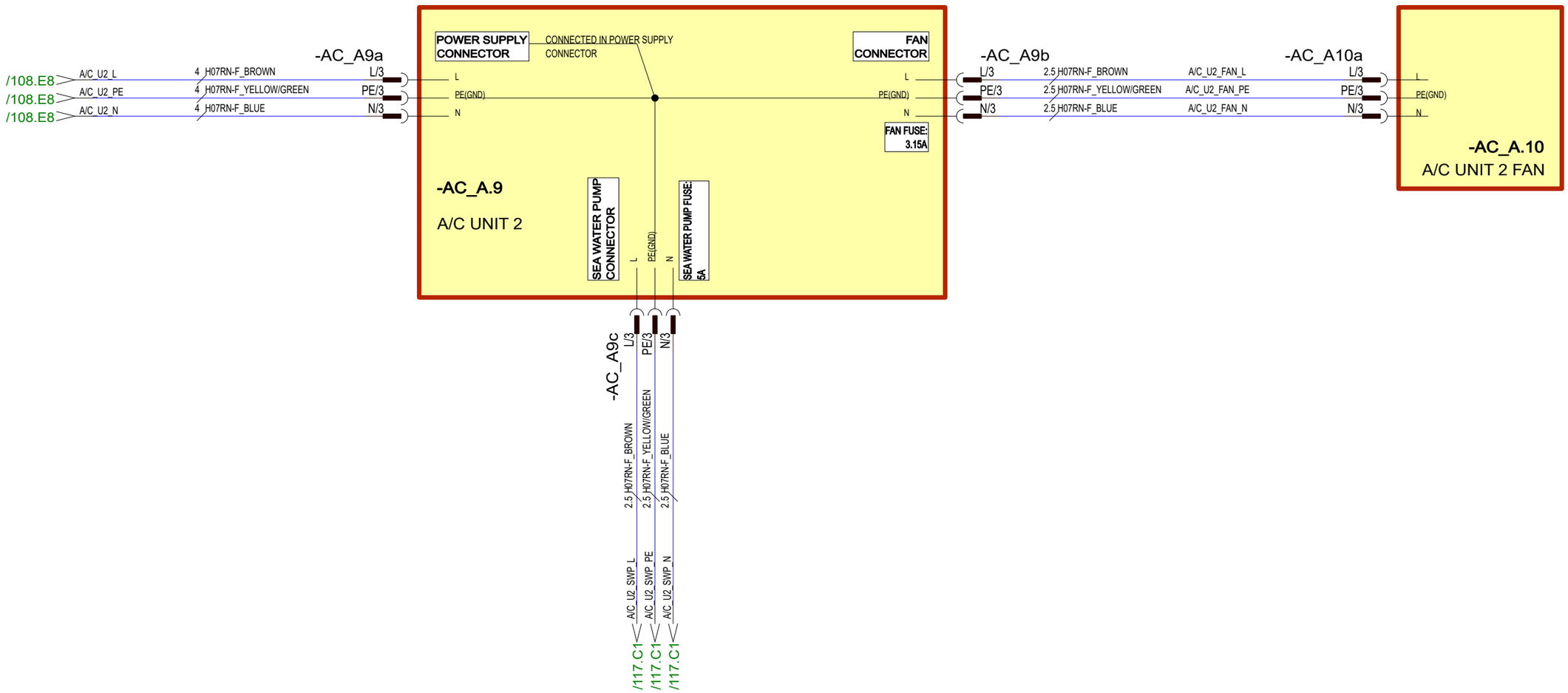

30.10.2023	PF	C3: 2004890; NOT MODIFIED	Date	30.10.2023	NAVIX	Axopar			
24.3.2023	TuM	A1: 2004274; NOT MODIFIED.	Drawing by	TuM		Boat	Sub-product code	Product code	Project ID
30.3.2023	TuM	B2: 2004274;	Sheet rev.	3		45	AC: A/C UNIT 2, EU - DIAGRAM	HL	115 / 444
Date of modification	Modified by	Description	Project rev.	C	Copyright by	Boat model	Title	Loc	Sheet

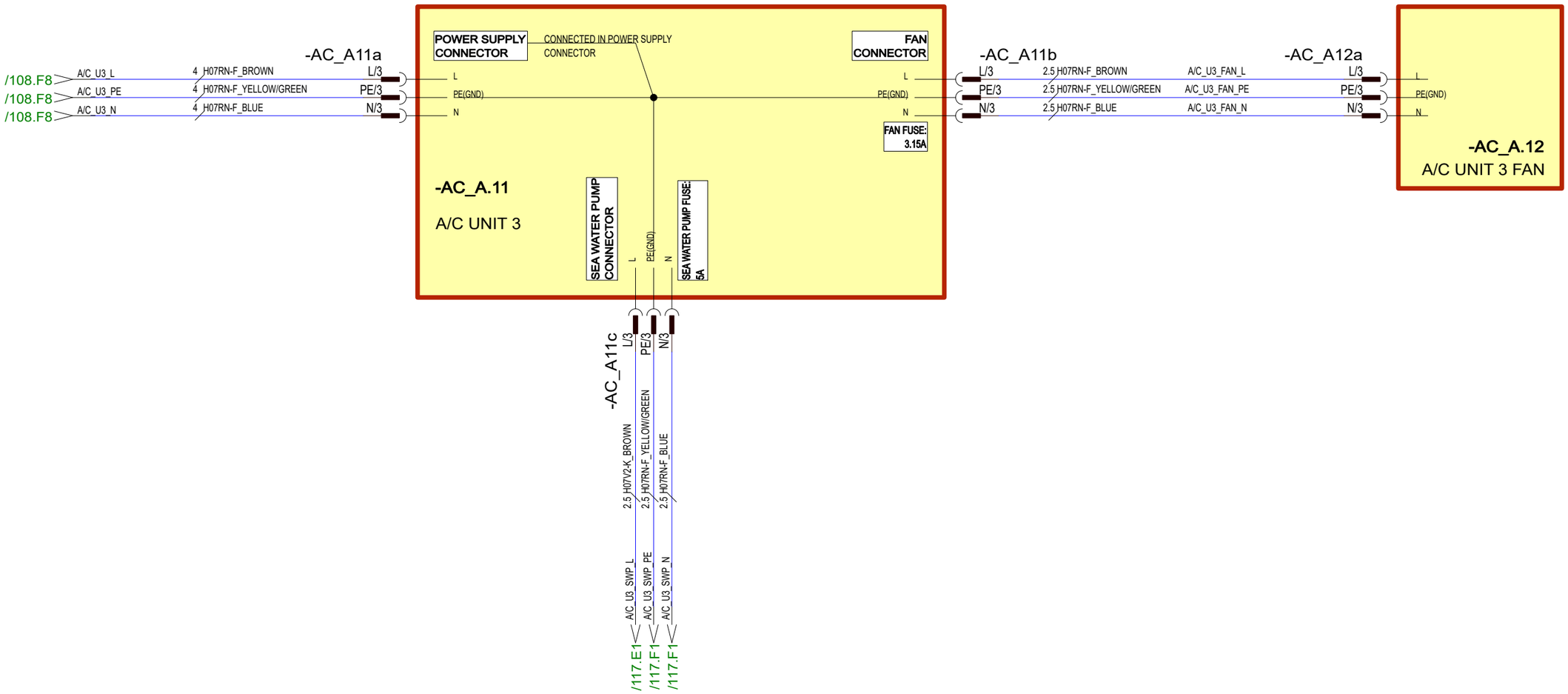

30.10.2023	PF	C3: 2004890; NOT MODIFIED	Date	30.10.2023	NAVIX	Axopar				
24.3.2023	TuM	A1: 2004274; NOT MODIFIED.	Drawing by	TuM		Boat	Sub-product code	Product code	Project ID	
30.3.2023	TuM	B2: 2004274;	Sheet rev.	3		45	AC: A/C UNIT 3, EU - DIAGRAM	HL	116 / 444
Date of modification	Modified by	Description	Project rev.	C	Copyright by	Boat model	Title	Loc	Sheet

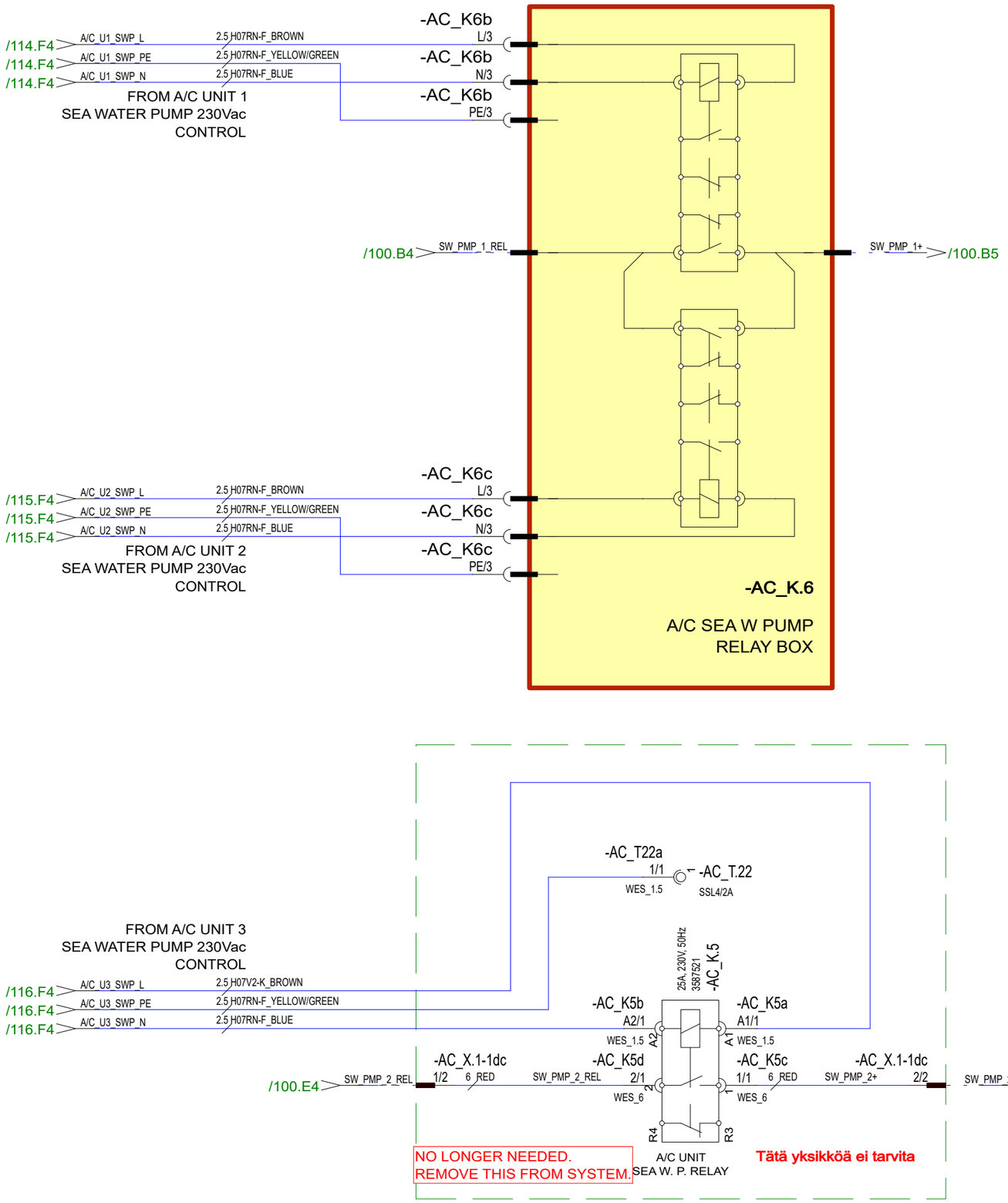

30.10.2023	PF	C3: 2004890; NOT MODIFIED	Date	30.10.2023	NAVIX	Axopar			
24.3.2023	TuM	A1: 2004274; NOT MODIFIED.	Drawing by	TuM		Boat	Sub-product code	Product code	Project ID
30.3.2023	TuM	B2: 2004274;	Sheet rev.	3		45	AC: A/C SEA W PUMP RELAY BOX - DIAGRAM	HL	117 / 444
Date of modification	Modified by	Description	Project rev.	C	Copyright by	Boat model	Title	Loc	Sheet

AC-SYSTEMS - EU

ZERO EMISSION

30.10.2023	PF	C3: 2004890; NOT MODIFIED	Date	30.10.2023	NAVIX Copyright by	Axopar			
24.3.2023	TuM	A1: 2004274; NOT MODIFIED.	Drawing by	TuM		Boat	Sub-product code	Product code	Project ID
30.3.2023	TuM	B2: 2004274;	Sheet rev.	3		45	----- AC-SYSTEMS - EU -----	HL	118 / 444
Date of modification	Modified by	Description	Project rev.	C		Boat model	Title ZERO EMISSION	Loc	Sheet

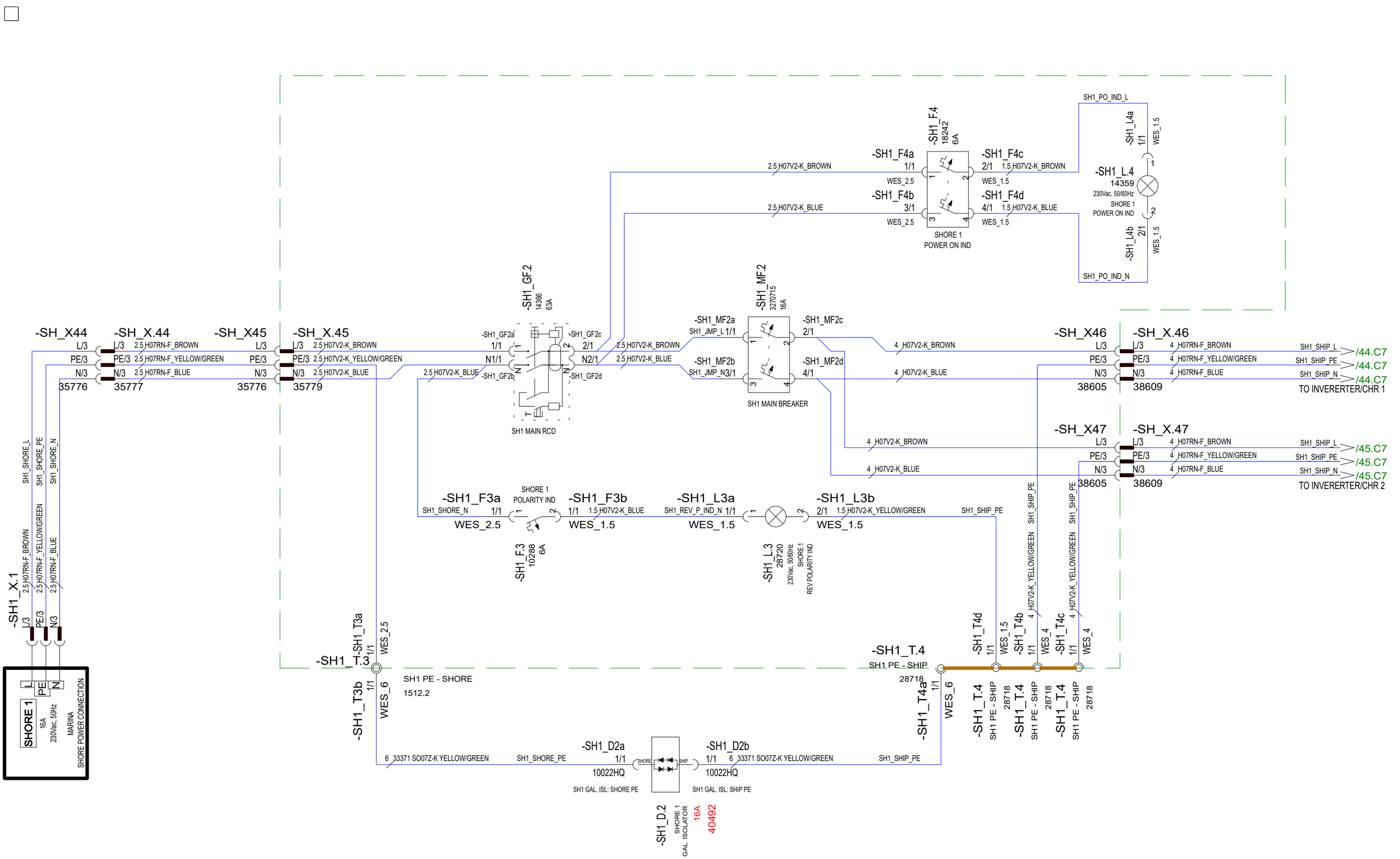

28.5.2024	TuM	C3: 2005065: Galvanic isolator changed 30A -->16A.	Date	30.10.2023	NAVIX	Axopar		
24.3.2023	TuM	A1: 2004274; NOT MODIFIED.	Drawing by	TuM		Boat	Sub-product code	Product code / Project ID
30.3.2023	TuM	B2: 2004274;	Sheet rev.	3		45	AC: SHORE 1 CONNECTION - DIAGRAM	HL / 119 / 444
Date of modification	Modified by	Description	Project rev.	C	Copyright by	Boat model	Title	Loc / Sheet

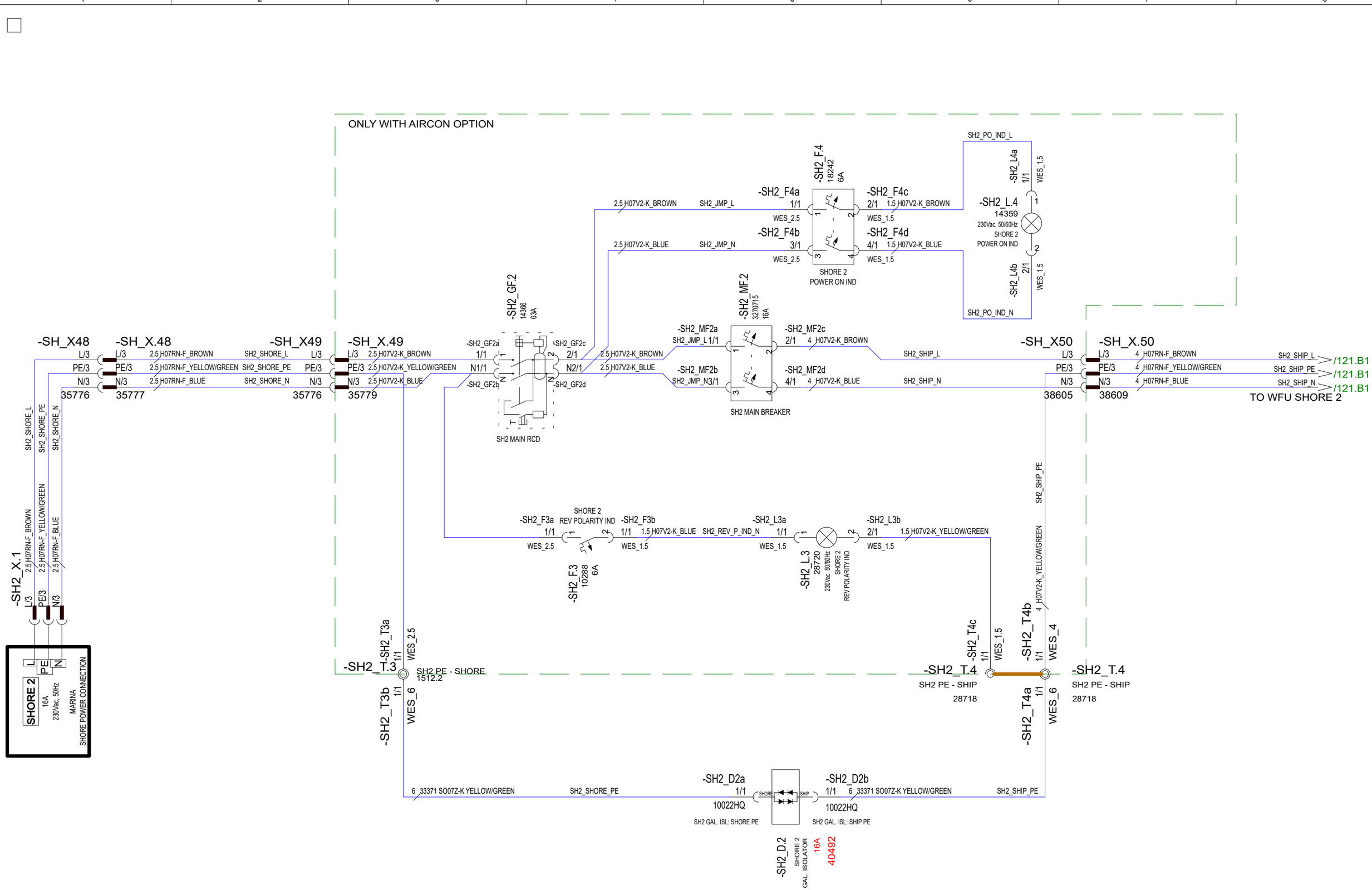

28.5.2024	TuM	C3: 2005065: Galvanic isolator changed 30A -->16A.	Date	30.10.2023	NAVIX	Axopar		
24.3.2023	TuM	A1: 2004274; NOT MODIFIED.	Drawing by	TuM		Boat	Sub-product code	Product code / Project ID
30.3.2023	TuM	B2: 2004274;	Sheet rev.	3		45	AC: SHORE 2 CONNECTION - DIAGRAM	HL / 120 / 444
Date of modification	Modified by	Description	Project rev.	C	Copyright by	Boat model	Title	Loc / Sheet

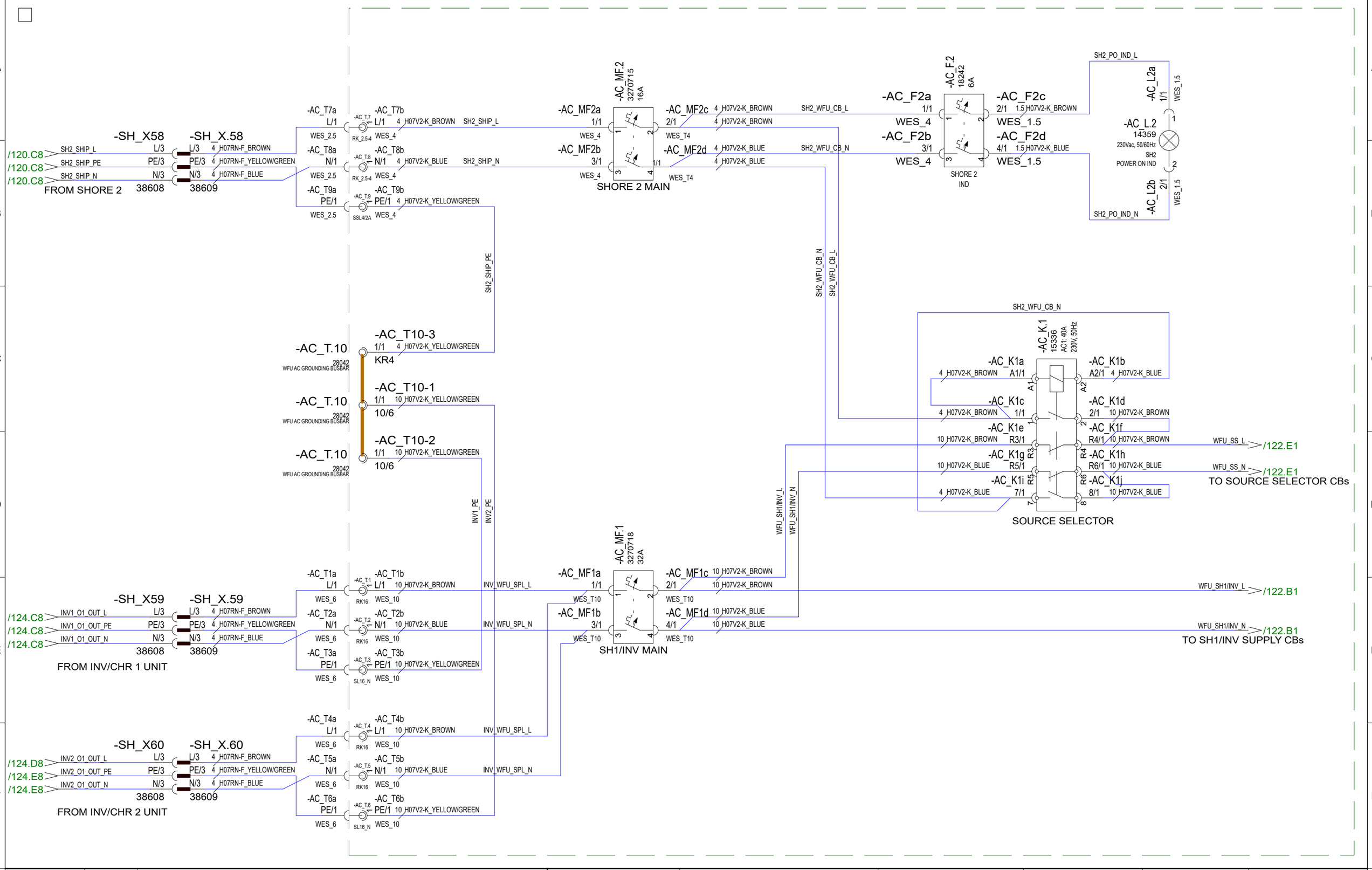

30.10.2023	PF	C3: 2004890; NOT MODIFIED	Date	30.10.2023	NAVIX	Axopar			
24.3.2023	TuM	A1: 2004274; NOT MODIFIED.	Drawing by	TuM		Boat	Sub-product code	Product code	Project ID
30.3.2023	TuM	B2: 2004274;	Sheet rev.	3		45	AC: AC DISTRIBUTION BRK, EU - DIAGRAM	HL	121/ 444
Date of modification	Modified by	Description	Project rev.	C	Copyright by	Boat model	Title	Loc	Sheet

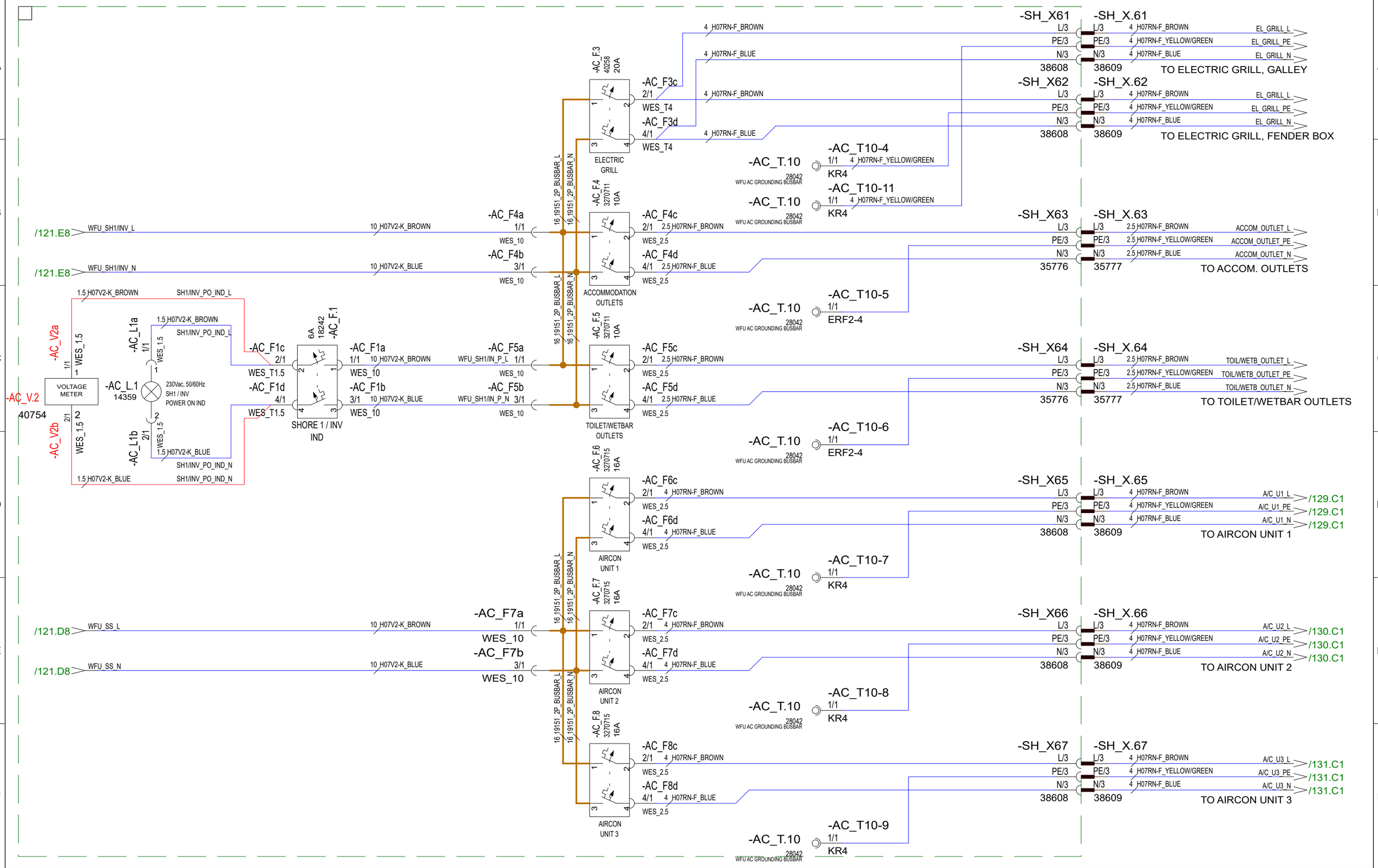

30.5.2024	TuM	C3: 2005065; Voltage meter AC_V2 added.	Date	30.10.2023	NAVIX	Axopar			
24.3.2023	TuM	A1: 2004274; NOT MODIFIED.	Drawing by	TuM		Boat	Sub-product code	Product code	Project ID
30.3.2023	TuM	B2: 2004274;	Sheet rev.	3		45	AC: AC DISTRIBUTION BRK, EU - DIAGRAM	HL	122 / 444
Date of modification	Modified by	Description	Project rev.	C	Copyright by	Boat model	Title	Loc	Sheet

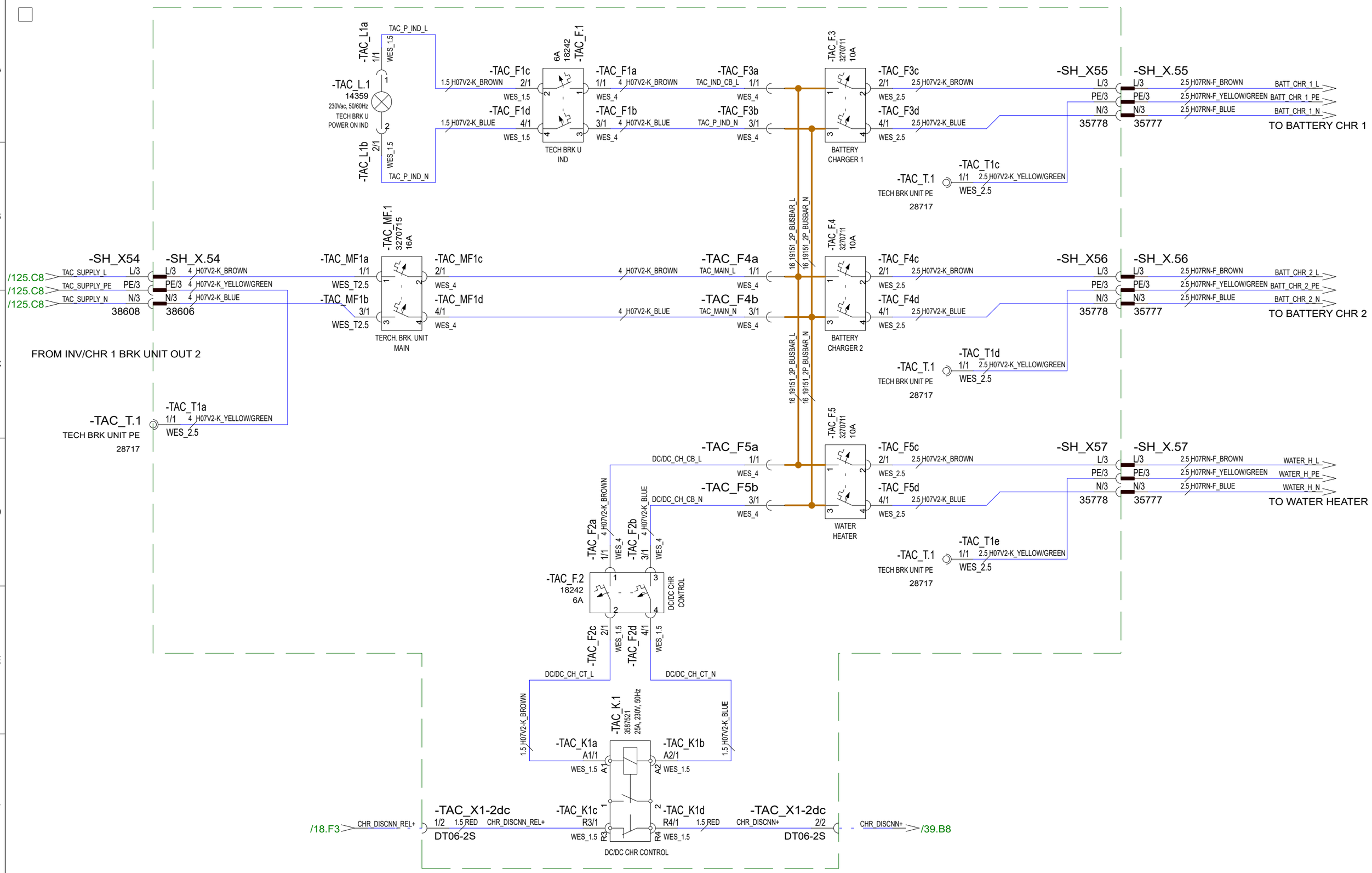

Date of modification	Modified by	Description
30.10.2023	PF	C3: 2004890; NOT MODIFIED
24.3.2023	TuM	A1: 2004274; NOT MODIFIED.
30.3.2023	TuM	B2: 2004274;

Date	30.10.2023
Drawing by	TuM
Sheet rev.	3
Project rev.	C

Copyright by

Axopar				
Boat	Sub-product code	Product code	Project ID	
45	AC: TECH. AC DISTR BRK UNIT - EU		HL	123 / 444
Boat model	Title		Loc	Sheet

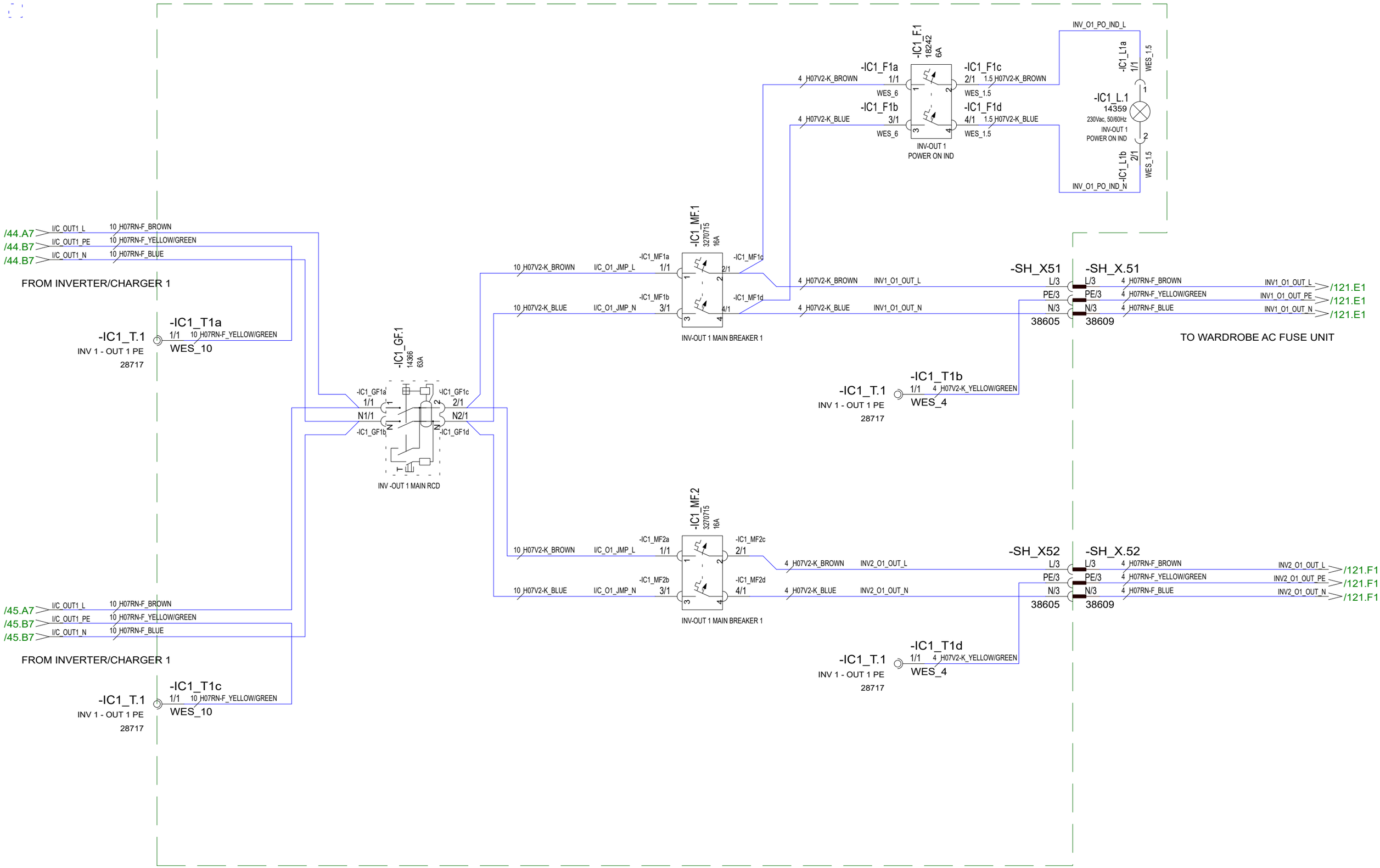

30.10.2023	PF	C3: 2004890; NOT MODIFIED	Date	30.10.2023	NAVIX	Axopar		
24.3.2023	TuM	A1: 2004274; NOT MODIFIED.	Drawing by	TuM		Boat	Sub-product code	Product code / Project ID
30.3.2023	TuM	B2: 2004274;	Sheet rev.	3		45	AC: INVERTER 1 MAIN BRK UNIT, EU - DIAGRAM	HL
Date of modification	Modified by	Description	Project rev.	C	Copyright by	Boat model	Title	Loc / 124 / 444 Sheet

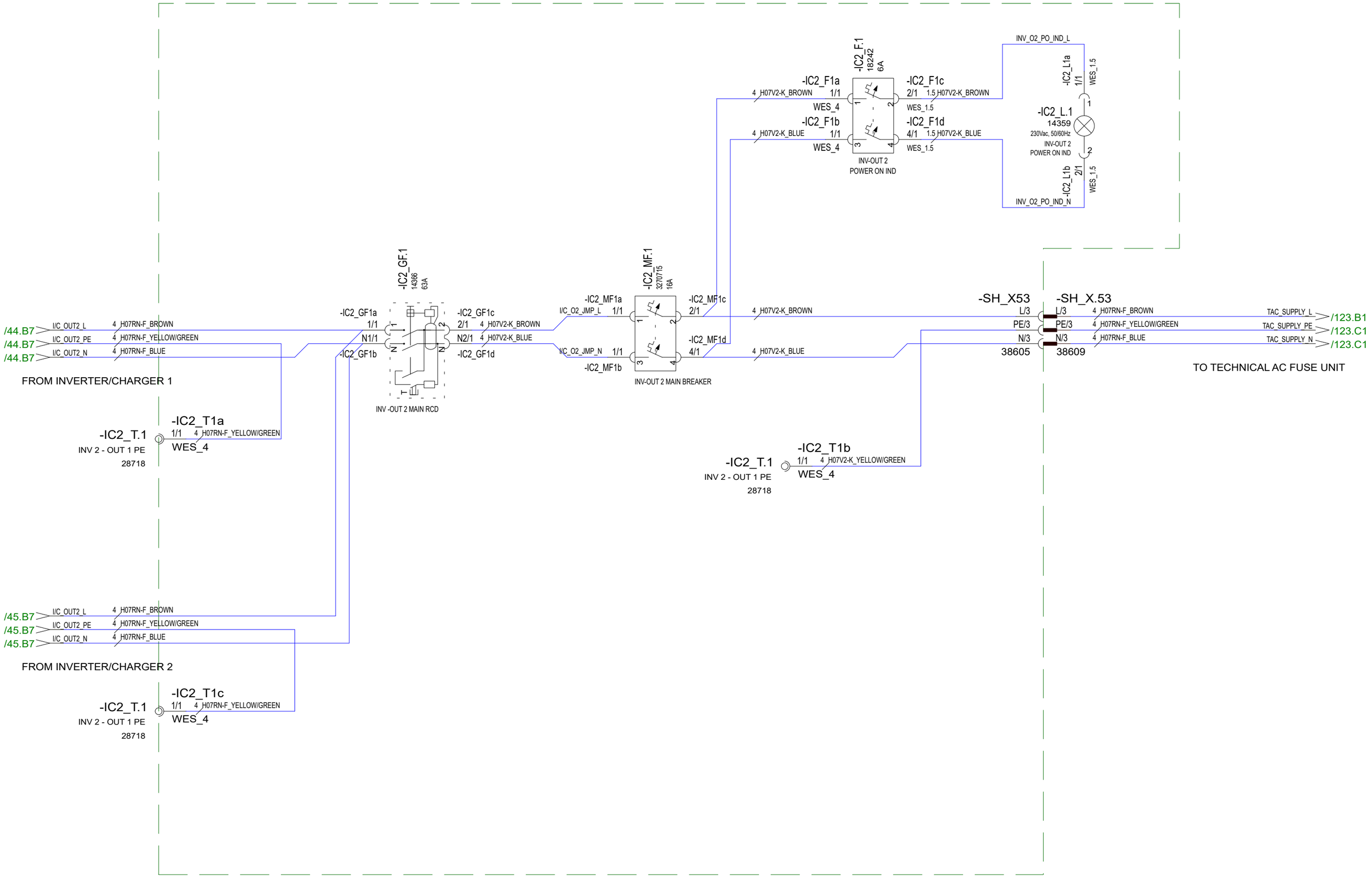

30.10.2023	PF	C3: 2004890; NOT MODIFIED	Date	30.10.2023	NAVIX	Axopar			
24.3.2023	TuM	A1: 2004274; NOT MODIFIED.	Drawing by	TuM		Boat	Sub-product code	Product code	Project ID
30.3.2023	TuM	B2: 2004274;	Sheet rev.	3		45	AC: INVERTER 2 MAIN BRK UNIT, EU - DIAGRAM		
Date of modification	Modified by	Description	Project rev.	C	Copyright by	Boat model	Title	Loc	125 / 444 Sheet

Date of modification	Modified by	Description							
30.10.2023	PF	C3: 2004890; NOT MODIFIED	Date	30.10.2023	Copyright by	Axopar			
24.3.2023	TuM	A1: 2004274; NOT MODIFIED.	Drawing by	TuM		Boat	Sub-product code	Product code	Project ID
30.3.2023	TuM	B2: 2004274;	Sheet rev.	3		45	AC: SOCKETS, EU - DIAGRAM	HL	126 / 444
			Project rev.	C		Boat model	Title	Loc	Sheet

Date of modification	Modified by	Description							
30.10.2023	PF	C3: 2004890; NOT MODIFIED	Date	30.10.2023	NAVIX	Axopar			
24.3.2023	TuM	A1: 2004274; NOT MODIFIED.	Drawing by	TuM		Boat	Sub-product code	Product code	Project ID
30.3.2023	TuM	B2: 2004274;	Sheet rev.	3		45	AC: WATER HEATER, EU - DIAGRAM	HL	127 / 444
			Project rev.	C	Copyright by	Boat model	Title	Loc	Sheet

Date of modification	Modified by	Description							
30.10.2023	PF	C3: 2004890; NOT MODIFIED	Date	30.10.2023	NAVIX	Axopar			
24.3.2023	TuM	A1: 2004274; NOT MODIFIED.	Drawing by	TuM		Boat	Sub-product code	Product code	Project ID
30.3.2023	TuM	B2: 2004274;	Sheet rev.	3		45	AC: ELECTRICAL GRILL, EU - DIAGRAM	HL	128 / 444
			Project rev.	C	Copyright by	Boat model	Title	Loc	Sheet

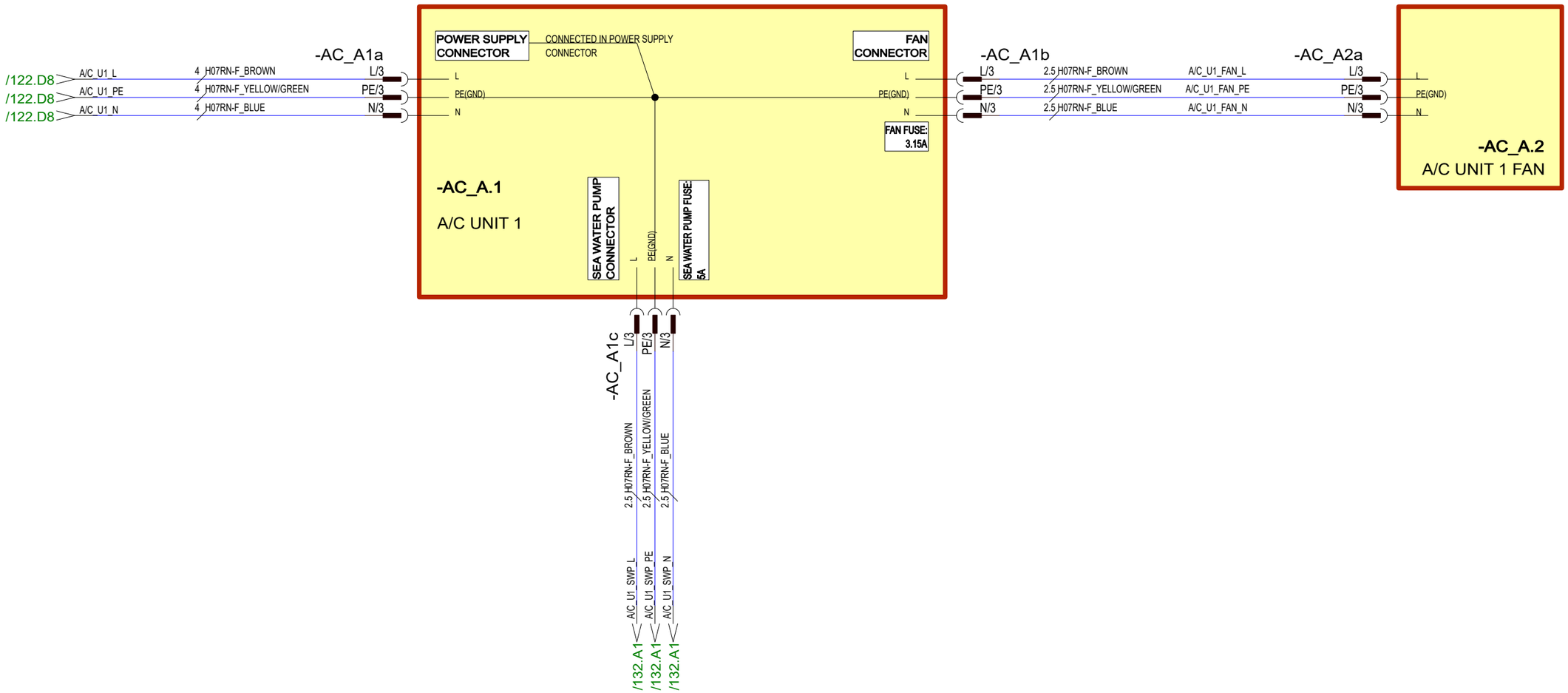

30.10.2023	PF	C3: 2004890; NOT MODIFIED	Date	30.10.2023	NAVIX	Axopar			
24.3.2023	TuM	A1: 2004274; NOT MODIFIED.	Drawing by	TuM		Boat	Sub-product code	Product code	Project ID
30.3.2023	TuM	B2: 2004274;	Sheet rev.	3		45	AC: A/C UNIT 1, EU - DIAGRAM	HL	129 / 444
Date of modification	Modified by	Description	Project rev.	C	Copyright by	Boat model	Title	Loc	Sheet

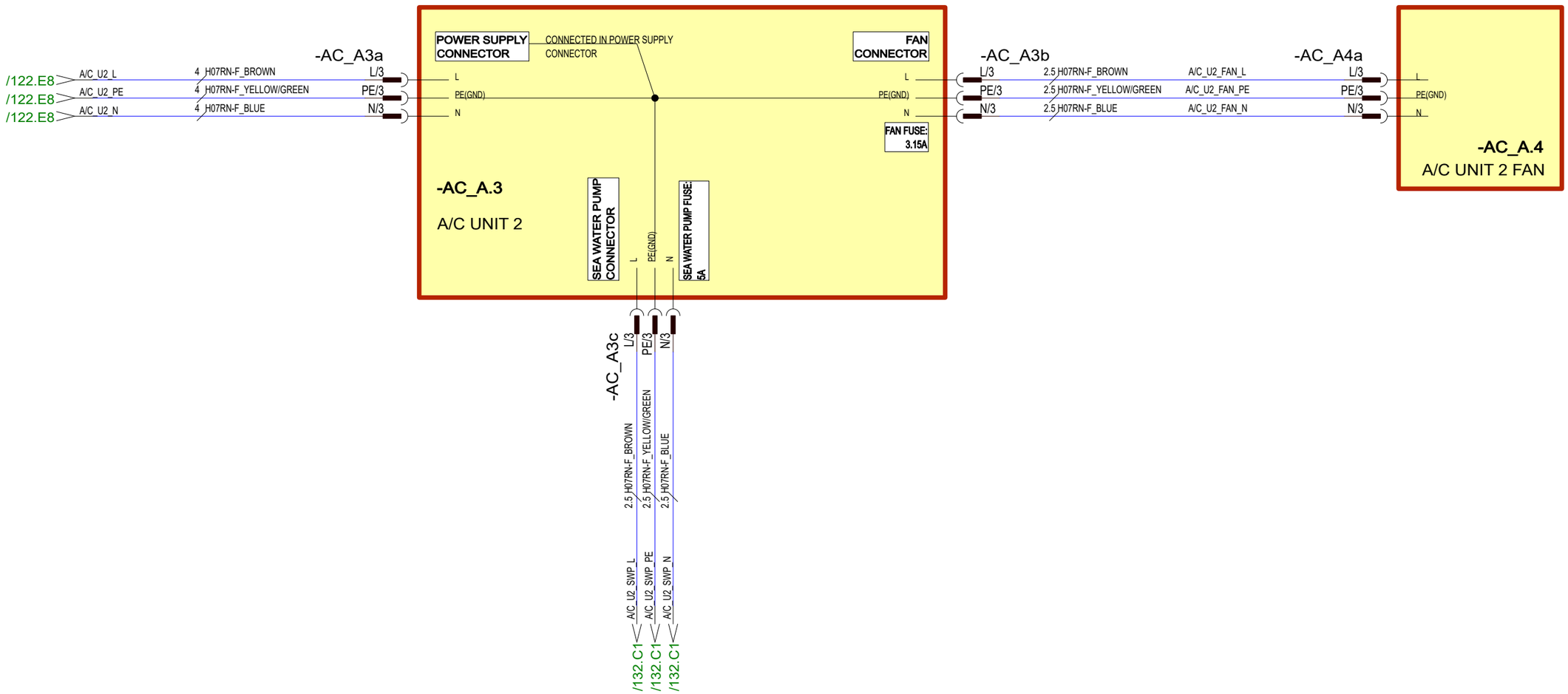

30.10.2023	PF	C3: 2004890; NOT MODIFIED	Date	30.10.2023	NAVIX	Axopar			
24.3.2023	TuM	A1: 2004274; NOT MODIFIED.	Drawing by	TuM		Boat	Sub-product code	Product code	Project ID
30.3.2023	TuM	B2: 2004274;	Sheet rev.	3		45	AC: A/C UNIT 2, EU - DIAGRAM	HL	130 / 444
Date of modification	Modified by	Description	Project rev.	C	Copyright by	Boat model	Title	Loc	Sheet

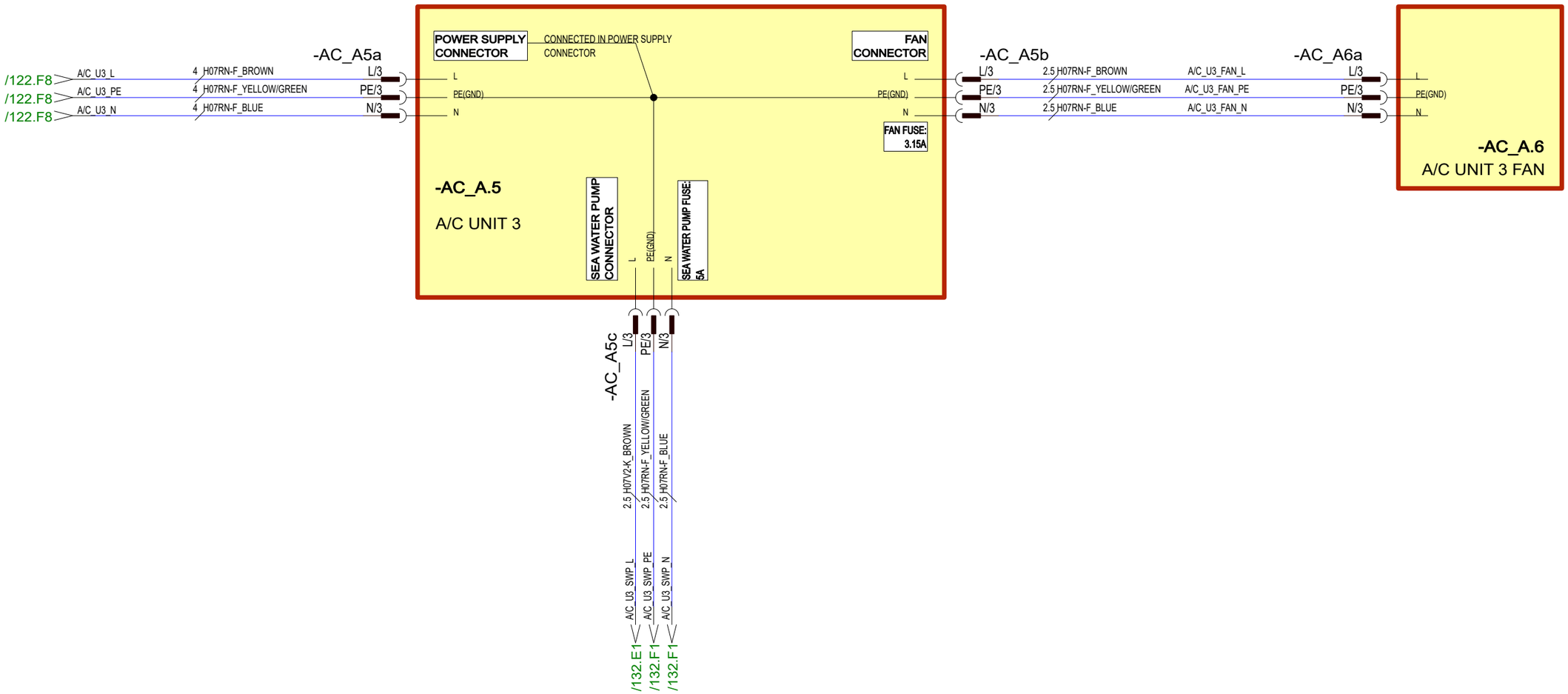

30.10.2023	PF	C3: 2004890; NOT MODIFIED	Date	30.10.2023	NAVIX	Axopar			
24.3.2023	TuM	A1: 2004274; NOT MODIFIED.	Drawing by	TuM		Boat	Sub-product code	Product code	Project ID
30.3.2023	TuM	B2: 2004274;	Sheet rev.	3		45	AC: A/C UNIT 3, EU - DIAGRAM	HL	131/ 444
Date of modification	Modified by	Description	Project rev.	C	Copyright by	Boat model	Title	Loc	Sheet

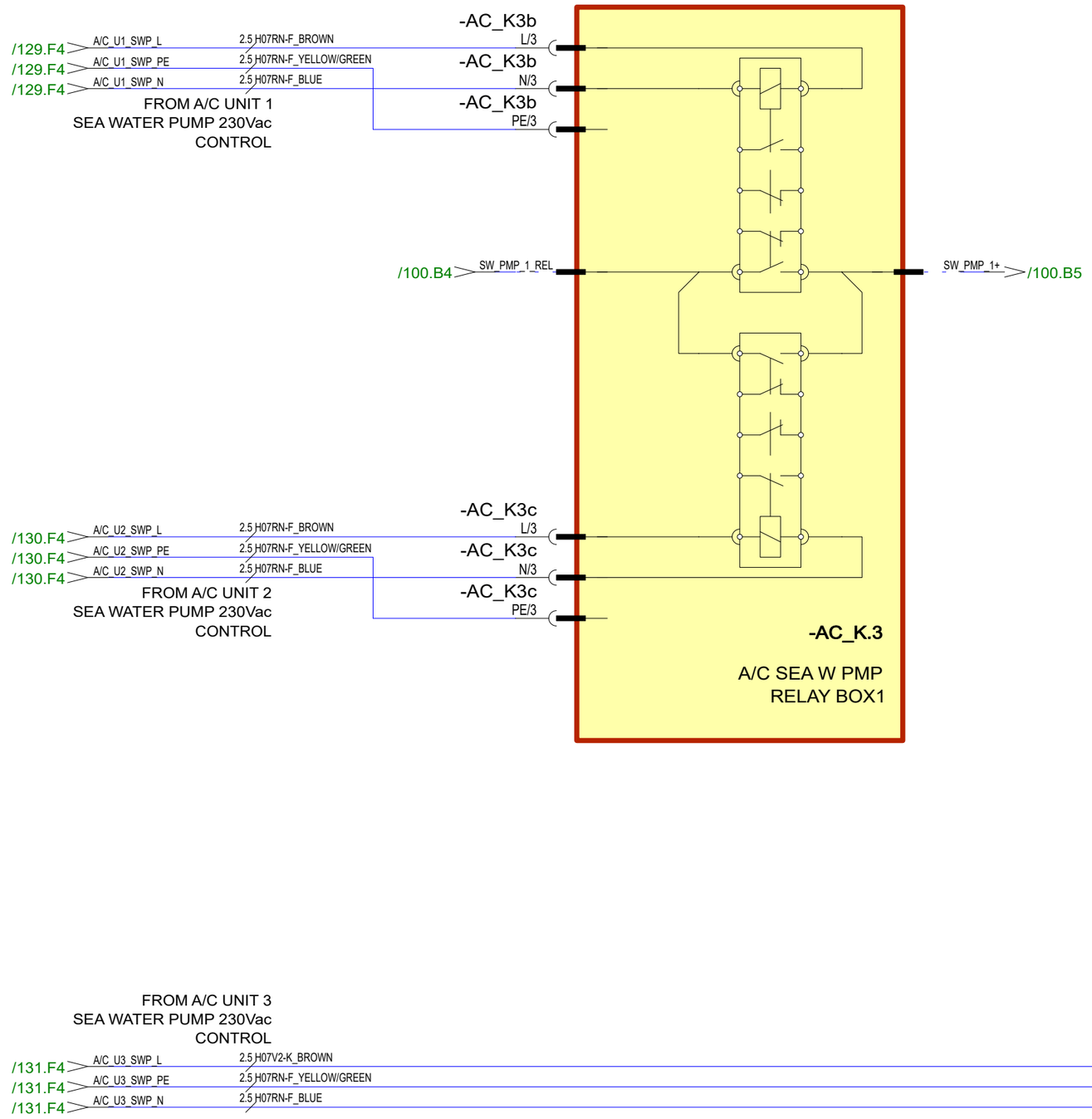

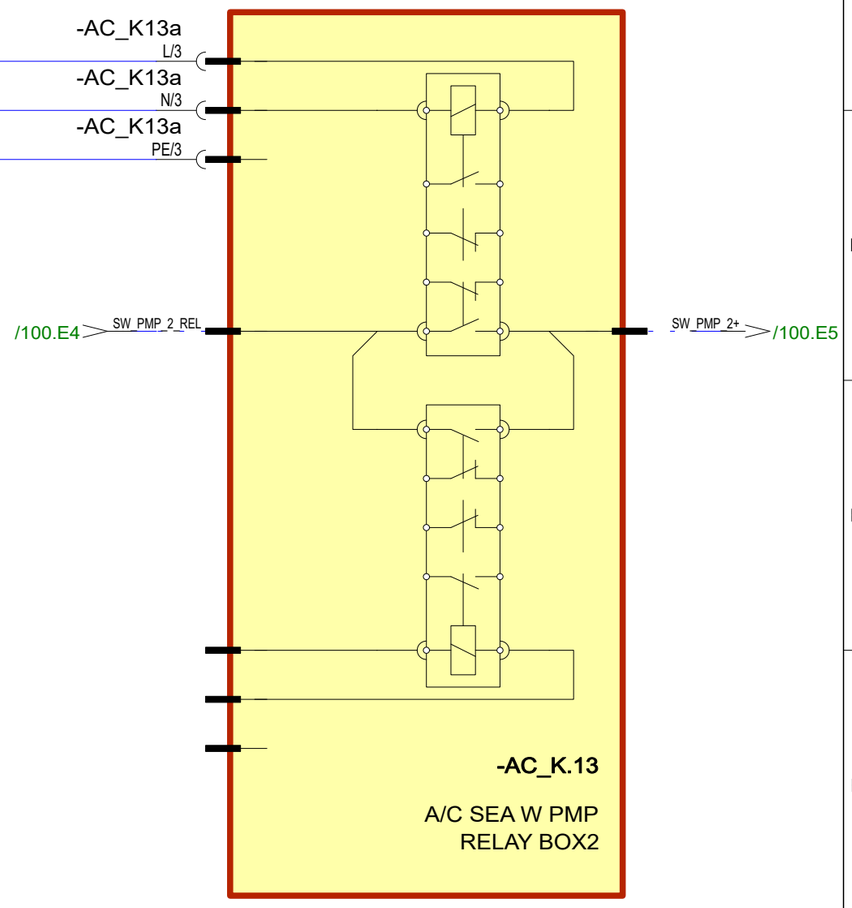

30.10.2023	PF	C3: 2004890; NOT MODIFIED	Date	30.10.2023	NAVIX	Axopar			
24.3.2023	TuM	A1: 2004274; NOT MODIFIED.	Drawing by	TuM		Boat	Sub-product code	Product code	Project ID
30.3.2023	TuM	B2: 2004274;	Sheet rev.	3		45	AC: A/C SEA W PUMP RELAY BOX - DIAGRAM	HL	132 / 444
Date of modification	Modified by	Description	Project rev.	C	Copyright by	Boat model	Title	Loc	Sheet

AC-SYSTEMS - USA

STANDARD

30.10.2023	PF	C3: 2004890; NOT MODIFIED	Date	30.10.2023	Copyright by NAVIX	Axopar			
24.3.2023	TuM	A1: 2004274; INTRODUCED DRAWING.	Drawing by	TuM		Boat	Sub-product code	Product code	Project ID
30.3.2023	TuM	B2: 2004274;	Sheet rev.	3		45	----- AC-SYSTEMS - USA	HL---	
Date of modification	Modified by	Description	Project rev.	C		Boat model	STANDARD Title	Loc	133 / 444 Sheet

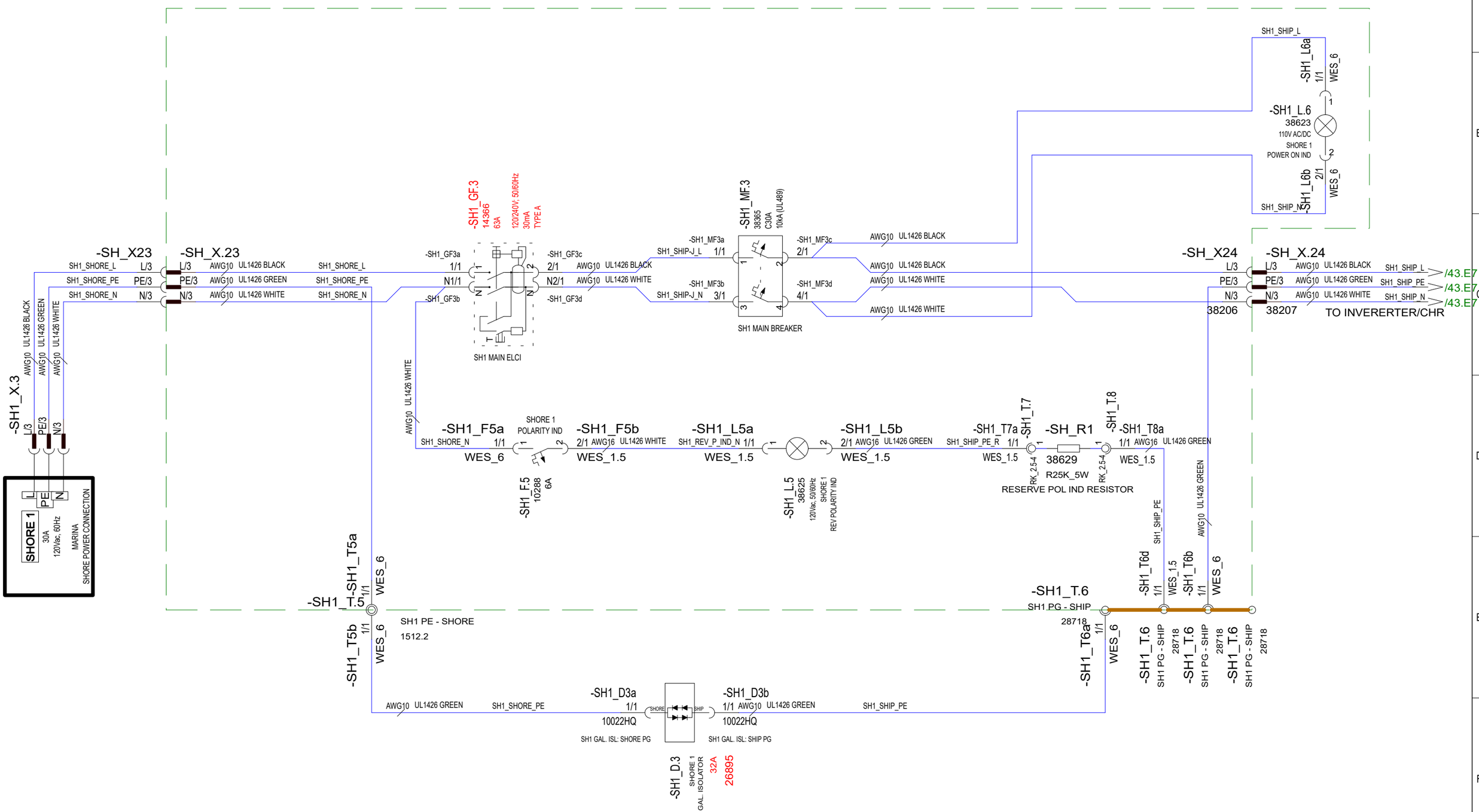

28.5.2024	TuM	C3: 2005065: Galvanic isolator changed 30A -->32A; ELCI changed 38366 GFP ->14366 RCD.	Date	30.10.2023	NAVIX	Axopar		
24.3.2023	TuM	A1: 2004274; INTRODUCED DRAWING.	Drawing by	TuM		Boat	Sub-product code	Product code / Project ID
30.3.2023	TuM	B2: 2004274;	Sheet rev.	3		45	AC: SHORE 1 CONNECTION, USA - DIAGRAM	HL / 134 / 444
Date of modification	Modified by	Description	Project rev.	C	Copyright by	Boat model	Title	Loc / Sheet

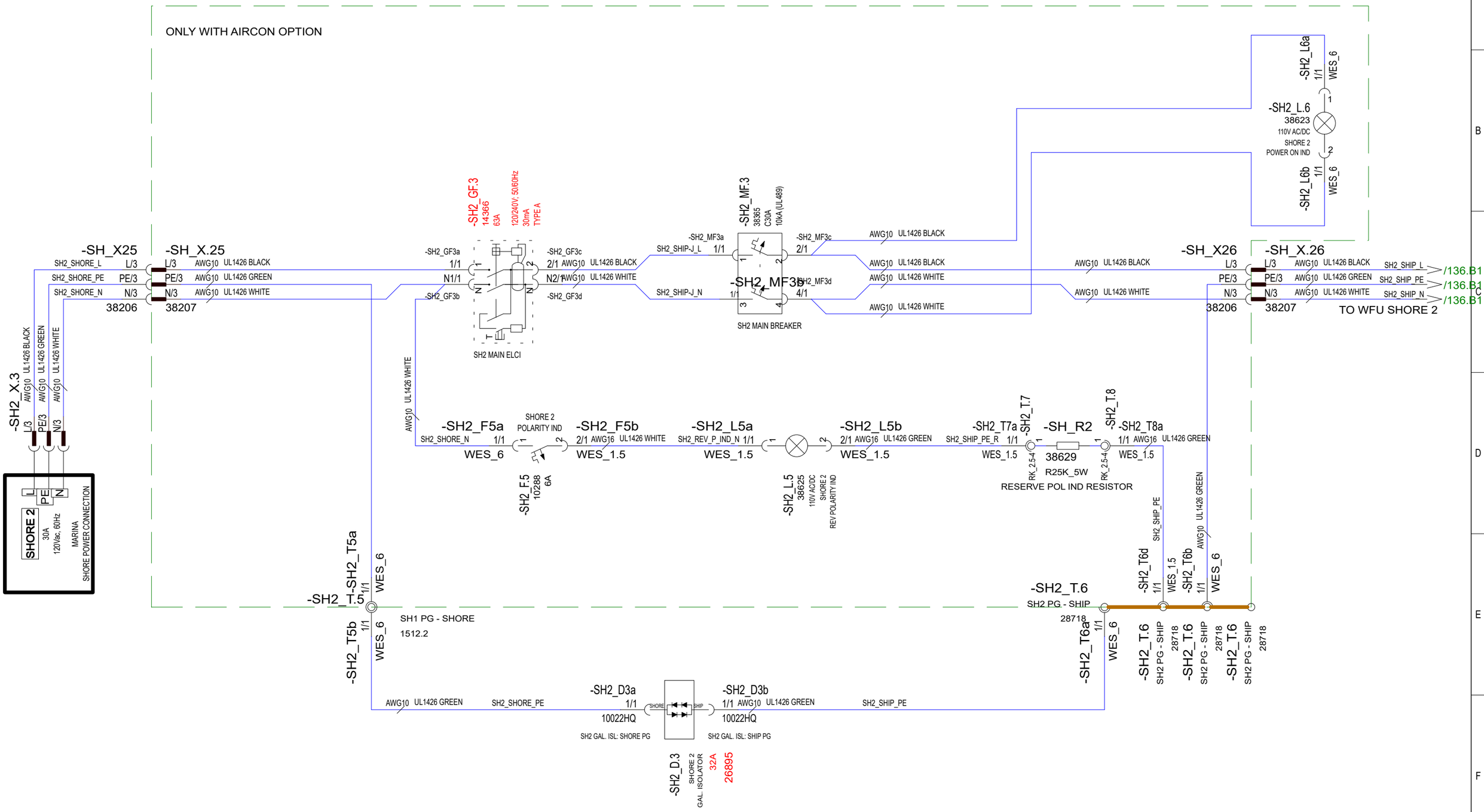

28.5.2024	TuM	C3: 2005065: Galvanic isolator changed 30A -->32A; ELCI changed 38366 GFP ->14366 RCD.	Date	30.10.2023	NAVIX	Axopar		
24.3.2023	TuM	A1: 2004274; INTRODUCED DRAWING.	Drawing by	TuM		Boat	Sub-product code	Product code	Project ID
30.3.2023	TuM	B2: 2004274;	Sheet rev.	3		45	AC: SHORE 2 CONNECTION, USA - DIAGRAM	HL	135 / 444
Date of modification	Modified by	Description	Project rev.	C	Copyright by	Boat model	Title	Loc	Sheet

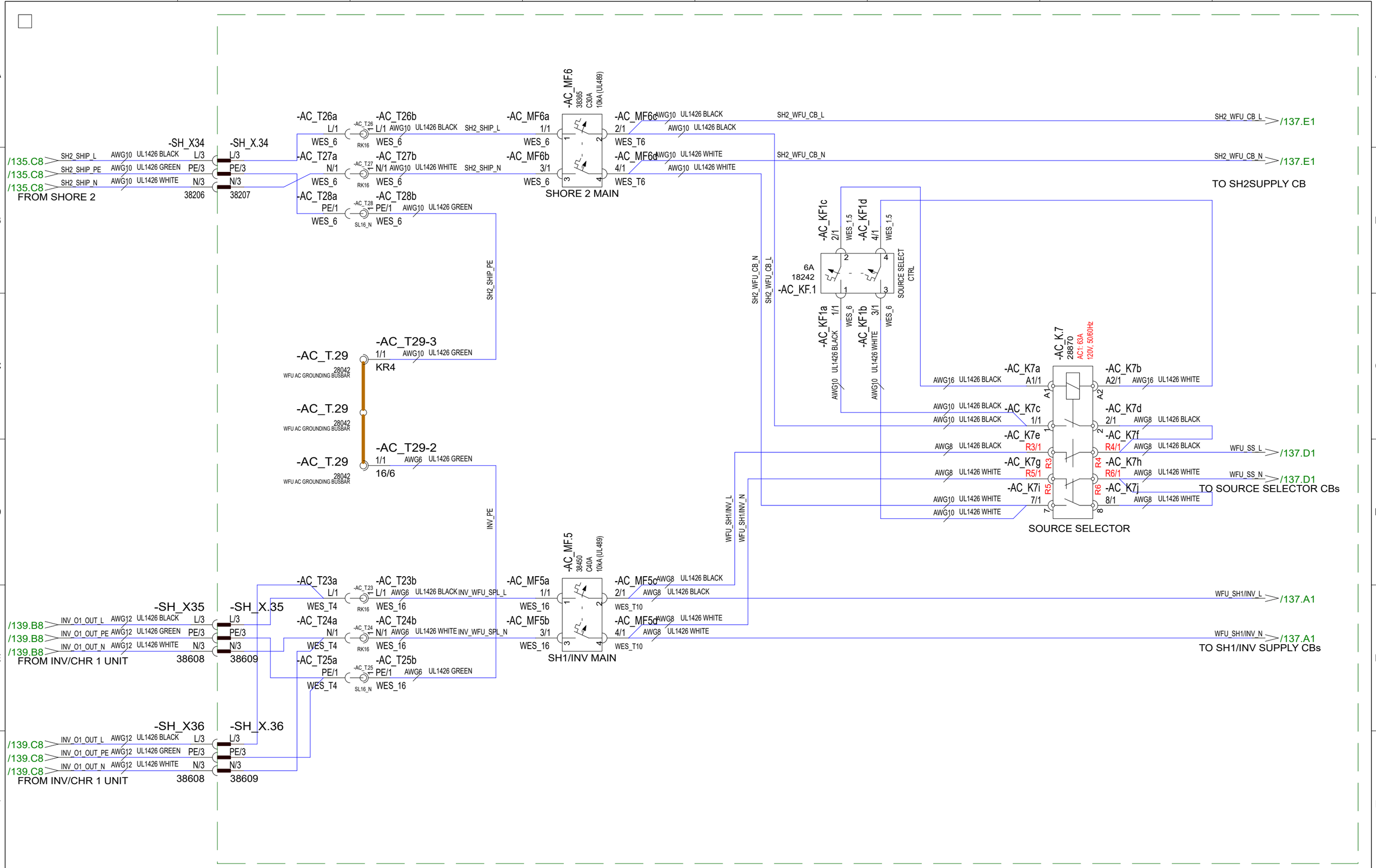

30.5.2024	TuM	C3: 2005065; AC_K7 TYPE 40A -> 63A (AC-1).	Date	30.10.2023	NAVIX	Axopar		
24.3.2023	TuM	A1: 2004274; INTRODUCED DRAWING.	Drawing by	TuM		Boat	Sub-product code	Product code / Project ID
30.3.2023	TuM	B2: 2004274;	Sheet rev.	3		45	AC: AC DISTRIBUTION BRK, USA - DIAGRAM	HL / Loc
Date of modification	Modified by	Description	Project rev.	C	Copyright by	Boat model	Title	136 / 444 Sheet

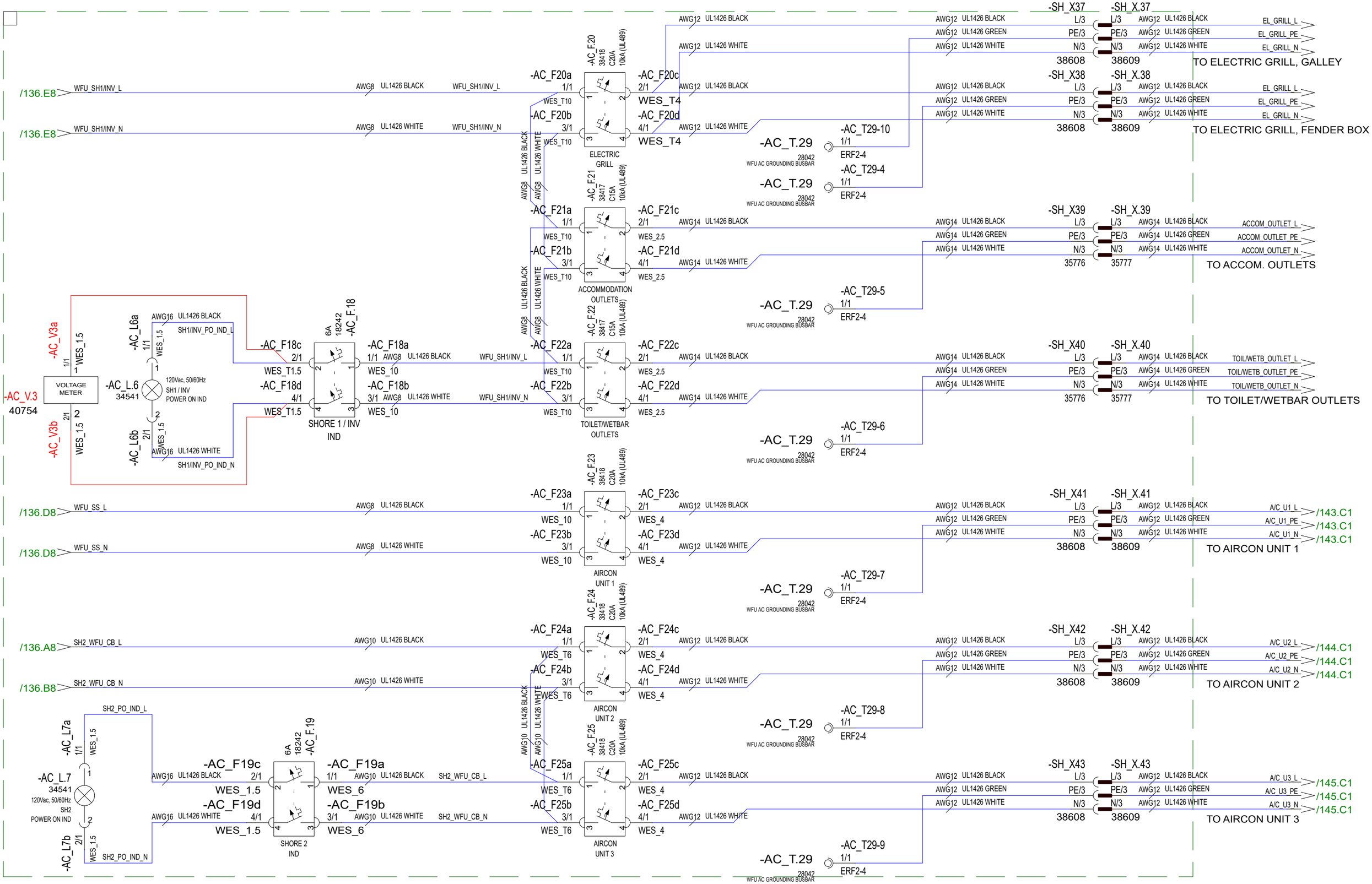

Date of modification	Modified by	Description						
30.5.2024	TuM	C3: 2005065; Voltage meter AC_V3 added.	Date	30.10.2023	NAVIX	Axopar		
24.3.2023	TuM	A1: 2004274; INTRODUCED DRAWING.	Drawing by	TuM		Boat	Sub-product code	Product code / Project ID
30.3.2023	TuM	B2: 2004274;	Sheet rev.	3	Copyright by	45	AC: AC DISTRIBUTION BRK, USA - DIAGRAM	HL / Loc
			Project rev.	C		Boat model	Title	137 / 444 Sheet

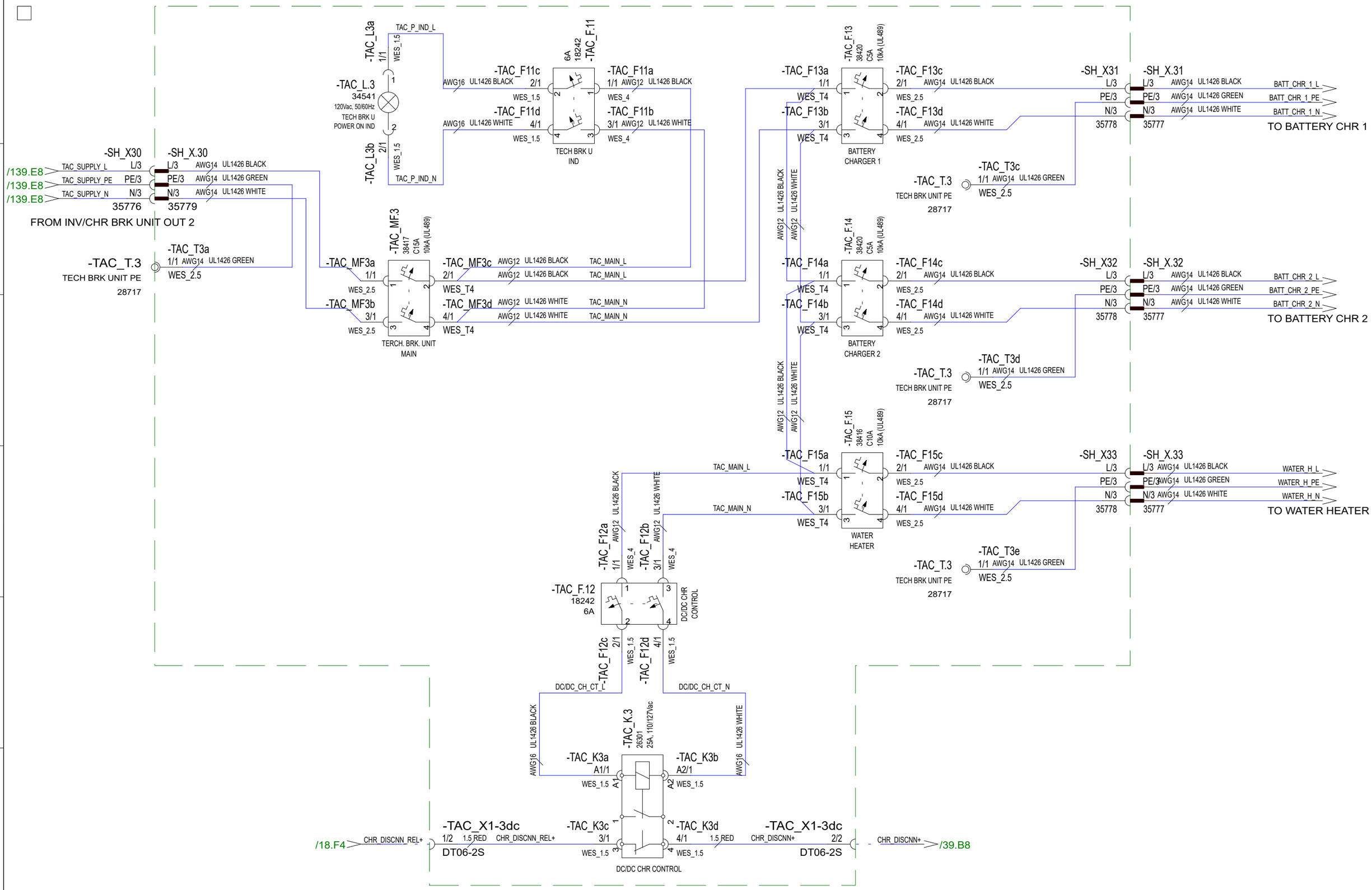

30.10.2023	PF	C3: 2004890; NOT MODIFIED	Date	30.10.2023	NAVIX	Axopar			
24.3.2023	TuM	A1: 2004274; INTRODUCED DRAWING.	Drawing by	TuM		Boat	Sub-product code	Product code	Project ID
30.3.2023	TuM	B2: 2004274;	Sheet rev.	3		45	AC: TECH. AC DISTR BRK UNIT, USA - DIAGRAM	HL	138 / 444
Date of modification	Modified by	Description	Project rev.	C	Copyright by	Boat model	Title	Loc	Sheet

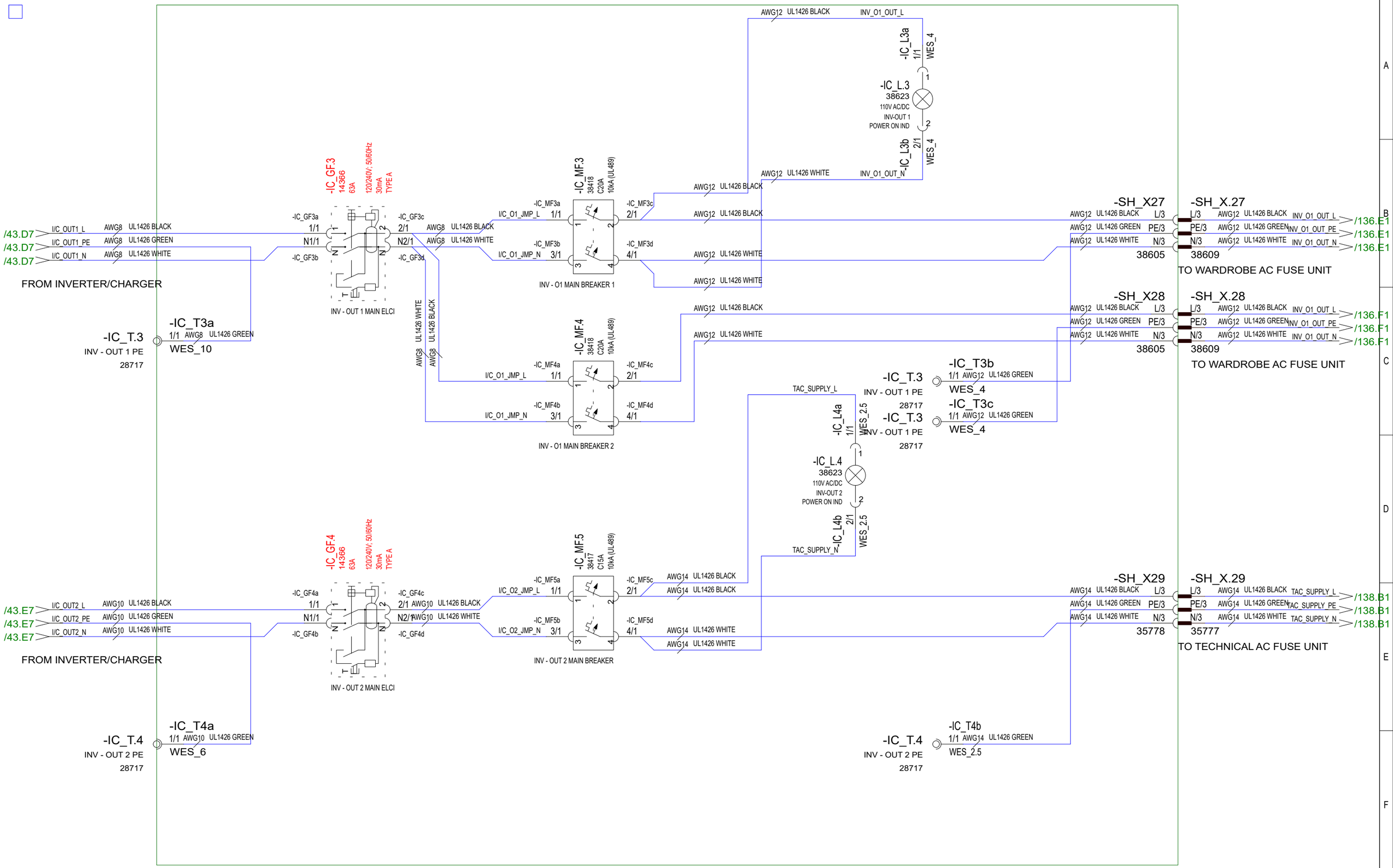

30.5.2024	TuM	C3: 2005065; ELCI changed 38366 GFP ->14366 RCD.	Date	30.10.2023		Axopar			
24.3.2023	TuM	A1: 2004274; INTRODUCED DRAWING.	Drawing by	TuM	NAVIX	Boat	Sub-product code	Product code	Project ID
30.3.2023	TuM	B2: 2004274;	Sheet rev.	3		45	AC: INVERTER MAIN BRK. UNIT, USA - DIAGRAM		
Date of modification	Modified by	Description	Project rev.	C	Copyright by	Boat model	Title	Loc	139 / 444 Sheet

FWD CABIN

FWD TOILET

MAIN CABIN

AFT CABIN

30.10.2023	PF	C3: 2004890; NOT MODIFIED	Date 30.10.2023	NAVIX	Axopar			
24.3.2023	TuM	A1: 2004274; INTRODUCED DRAWING.	Drawing by TuM		Boat	Sub-product code	Product code	Project ID
30.3.2023	TuM	B2: 2004274;	Sheet rev. 3		45	AC: SOCKETS, USA - DIAGRAM	HL	140 / 444
Date of modification	Modified by	Description	Project rev. C	Copyright by	Boat model	Title	Loc	Sheet

WATER
HEATER

30.10.2023	PF	C3: 2004890; NOT MODIFIED	Date	30.10.2023	NAVIX	Axopar			
24.3.2023	TuM	A1: 2004274; INTRODUCED DRAWING.	Drawing by	TuM		Boat	Sub-product code	Product code	Project ID
30.3.2023	TuM	B2: 2004274;	Sheet rev.	3		45	AC: WATER HEATER, USA - DIAGRAM	HL	141/ 444
Date of modification	Modified by	Description	Project rev.	C	Copyright by	Boat model	Title	Loc	Sheet

WETBAR
GRILL

COVER CLOSING
CUT-OFF SWITCH
FOR Vac POWER

FENDEX BOX GRILL
GRILL

30.10.2023	PF	C3: 2004890; NOT MODIFIED	Date	30.10.2023	NAVIX	Axopar			
24.3.2023	TuM	A1: 2004274; INTRODUCED DRAWING.	Drawing by	TuM		Boat	Sub-product code	Product code	Project ID
30.3.2023	TuM	B2: 2004274;	Sheet rev.	3		45	AC: ELECTRICAL GRILL, USA - DIAGRAM	HL	142 / 444
Date of modification	Modified by	Description	Project rev.	C	Copyright by	Boat model	Title	Loc	Sheet

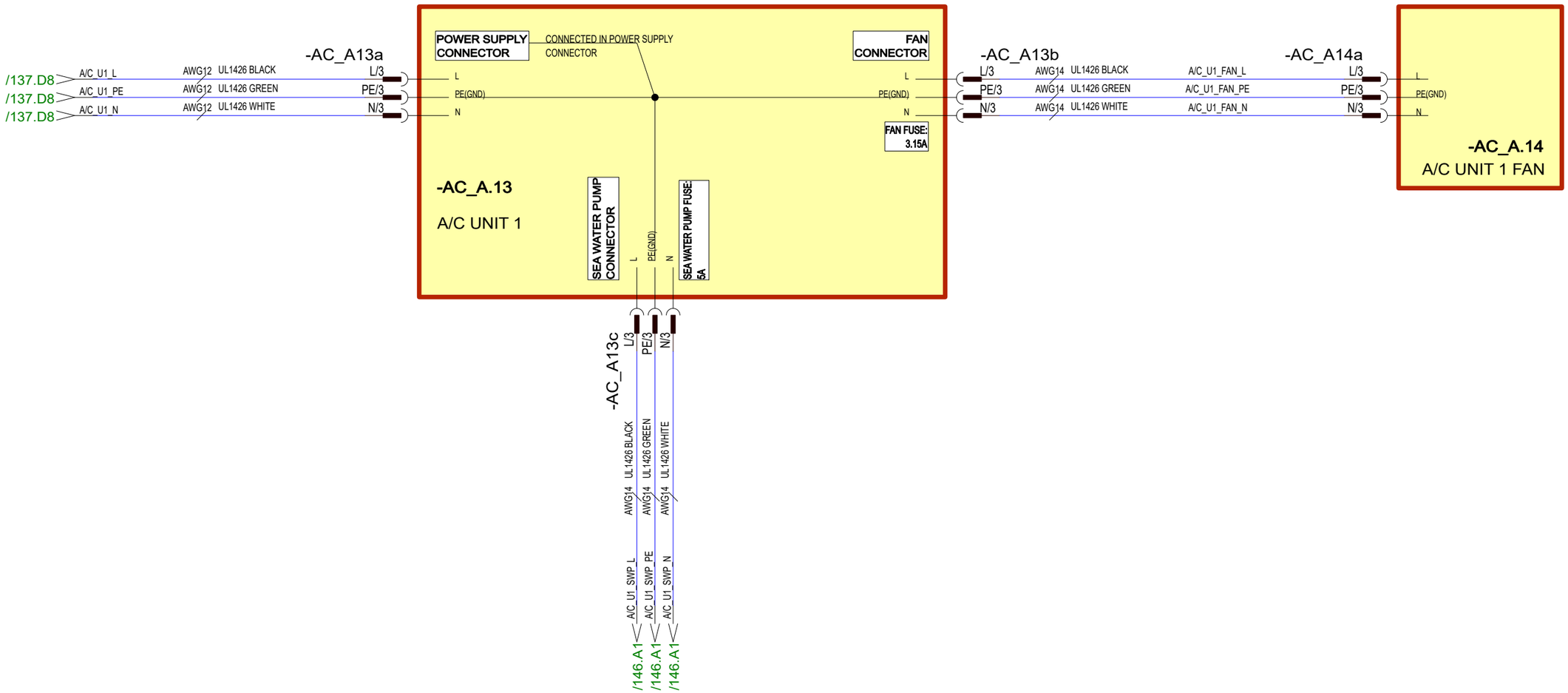

30.10.2023	PF	C3: 2004890; NOT MODIFIED	Date	30.10.2023	NAVIX	Axopar			
24.3.2023	TuM	A1: 2004274; INTRODUCED DRAWING.	Drawing by	TuM					
30.3.2023	TuM	B2: 2004274;	Sheet rev.	3		45	AC: A/C UNIT 1, USA - DIAGRAM	HL	143 / 444
Date of modification	Modified by	Description	Project rev.	C	Copyright by	Boat model	Title	Loc	Sheet

Copyright by NAVIX

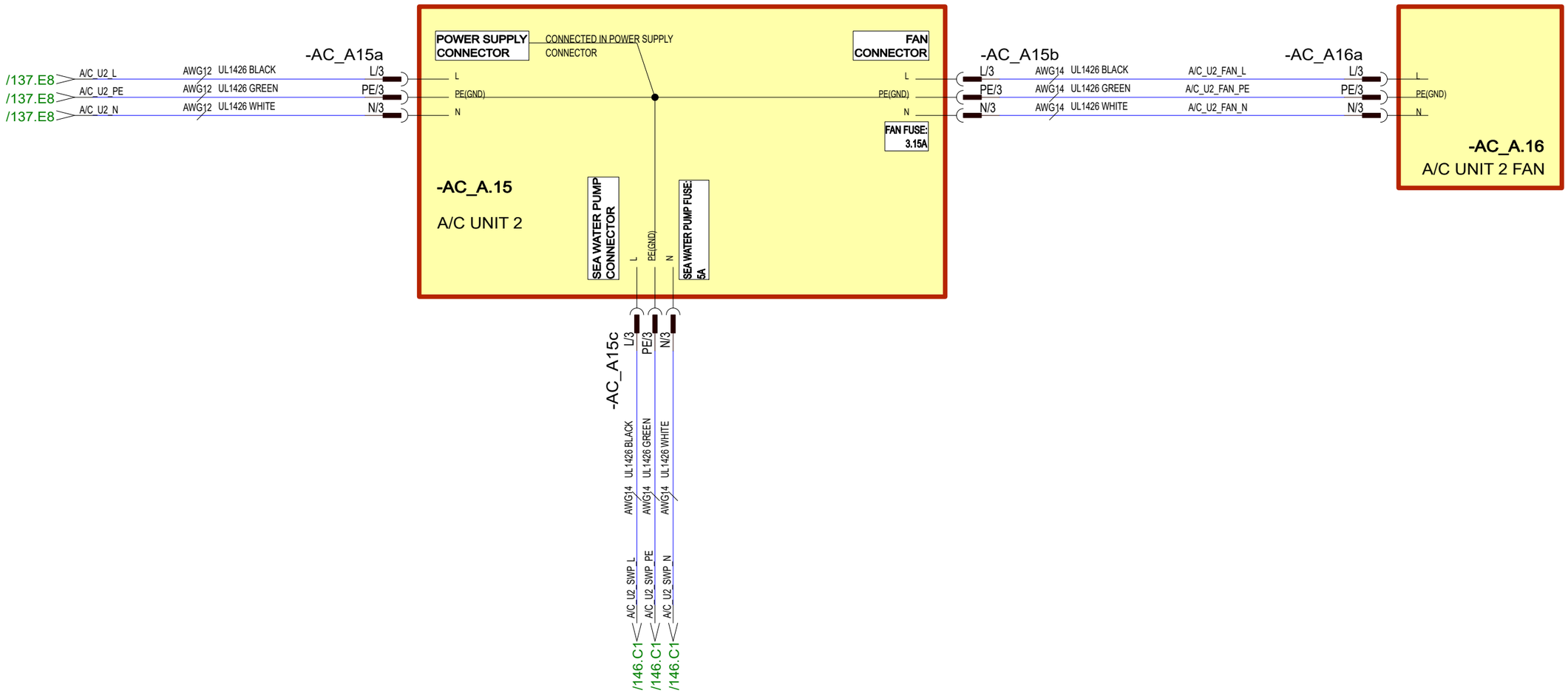

30.10.2023	PF	C3: 2004890; NOT MODIFIED	Date	30.10.2023	NAVIX	Axopar			
24.3.2023	TuM	A1: 2004274; INTRODUCED DRAWING.	Drawing by	TuM		Boat	Sub-product code	Product code	Project ID
30.3.2023	TuM	B2: 2004274;	Sheet rev.	3		45	AC: A/C UNIT 2, USA - DIAGRAM	HL	144 / 444
Date of modification	Modified by	Description	Project rev.	C	Copyright by	Boat model	Title	Loc	Sheet

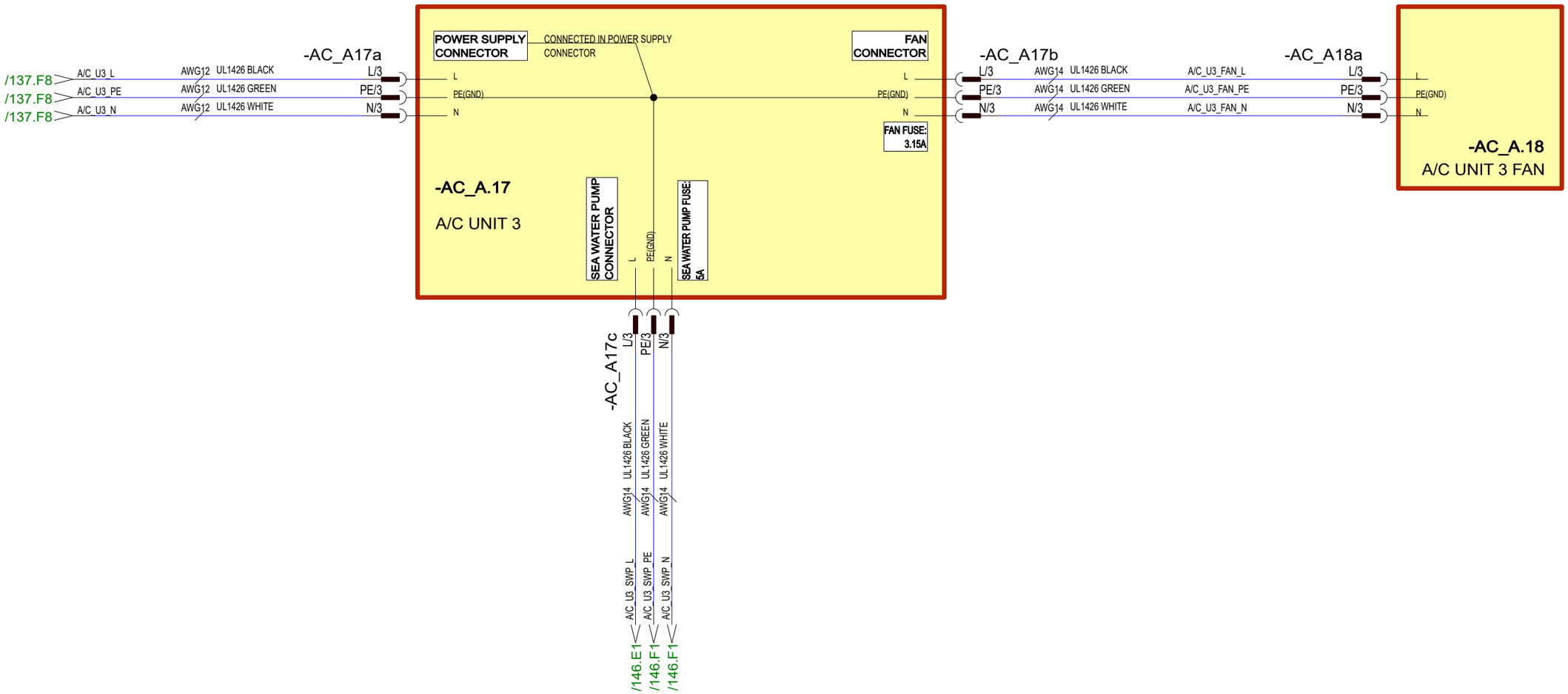

30.10.2023	PF	C3: 2004890; NOT MODIFIED	Date	30.10.2023		Axopar				
24.3.2023	TuM	A1: 2004274; INTRODUCED DRAWING.	Drawing by	TuM						
30.3.2023	TuM	B2: 2004274;	Sheet rev.	3	NAVIX	45	AC: A/C UNIT 3, USA - DIAGRAM	HL	145 / 444
Date of modification	Modified by	Description	Project rev.	C	Copyright by	Boat model	Title	Loc	Sheet

Boat | Sub-product code | Product code | Project ID

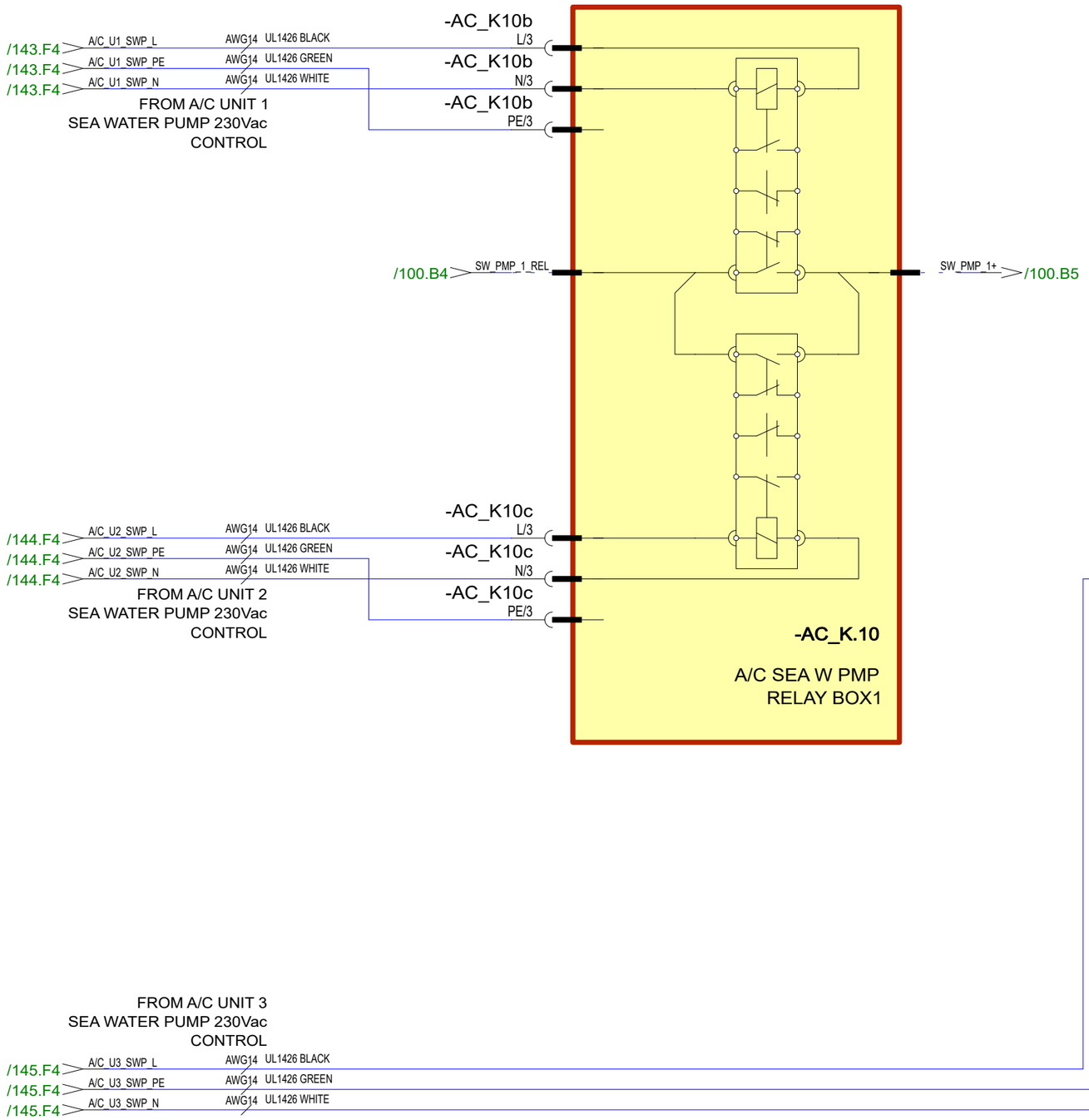

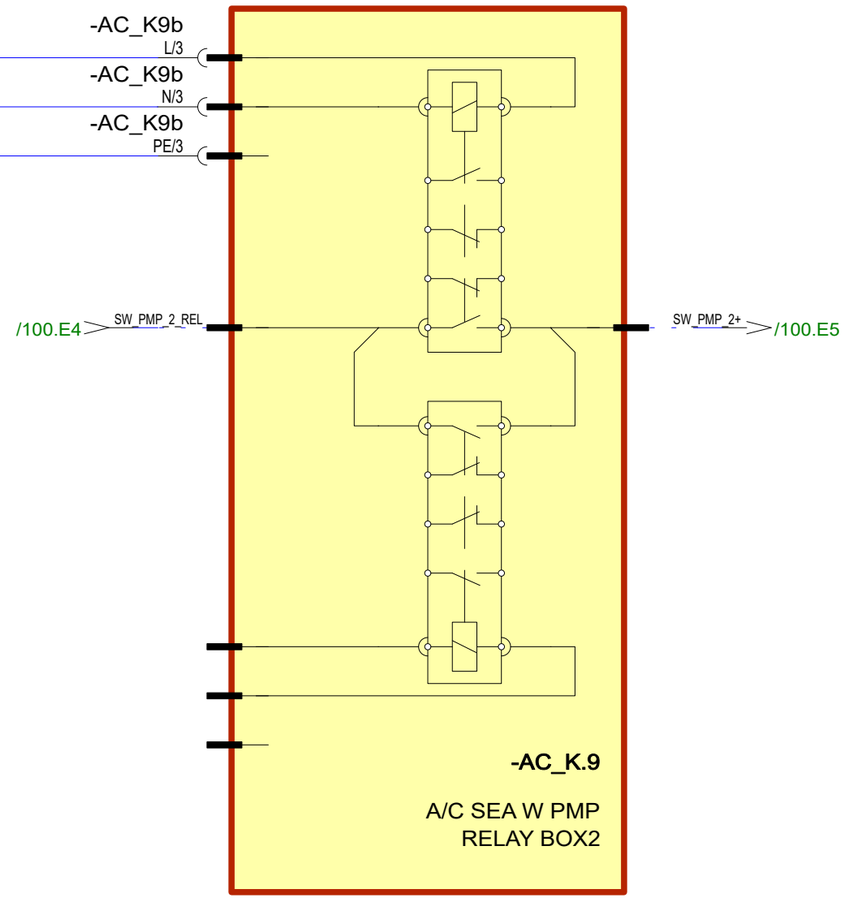

30.10.2023	PF	C3: 2004890; NOT MODIFIED	Date	30.10.2023	NAVIX	Axopar			
24.3.2023	TuM	A1: 2004274; INTRODUCED DRAWING.	Drawing by	TuM					
30.3.2023	TuM	B2: 2004274;	Sheet rev.	3		45	AC: A/C SEA W PUMP RELAY BOX, USA - DIAGRAM	HL	146 / 444
Date of modification	Modified by	Description	Project rev.	C	Copyright by	Boat model	Title	Loc	Sheet

Boat: Axopar | Sub-product code: | Product code: | Project ID:

AC-SYSTEMS - USA

ZERO EMISSION

30.10.2023	PF	C3: 2004890; NOT MODIFIED	Date	30.10.2023	NAVIX Copyright by	Axopar			
24.3.2023	TuM	A1: 2004274; INTRODUCED DRAWING.	Drawing by	TuM		Boat	Sub-product code	Product code	Project ID
30.3.2023	TuM	B2: 2004274;	Sheet rev.	3		45	----- AC-SYSTEMS - USA	HL---	
Date of modification	Modified by	Description	Project rev.	C		Boat model	ZERO EMISSION Title	Loc	147 / 444 Sheet

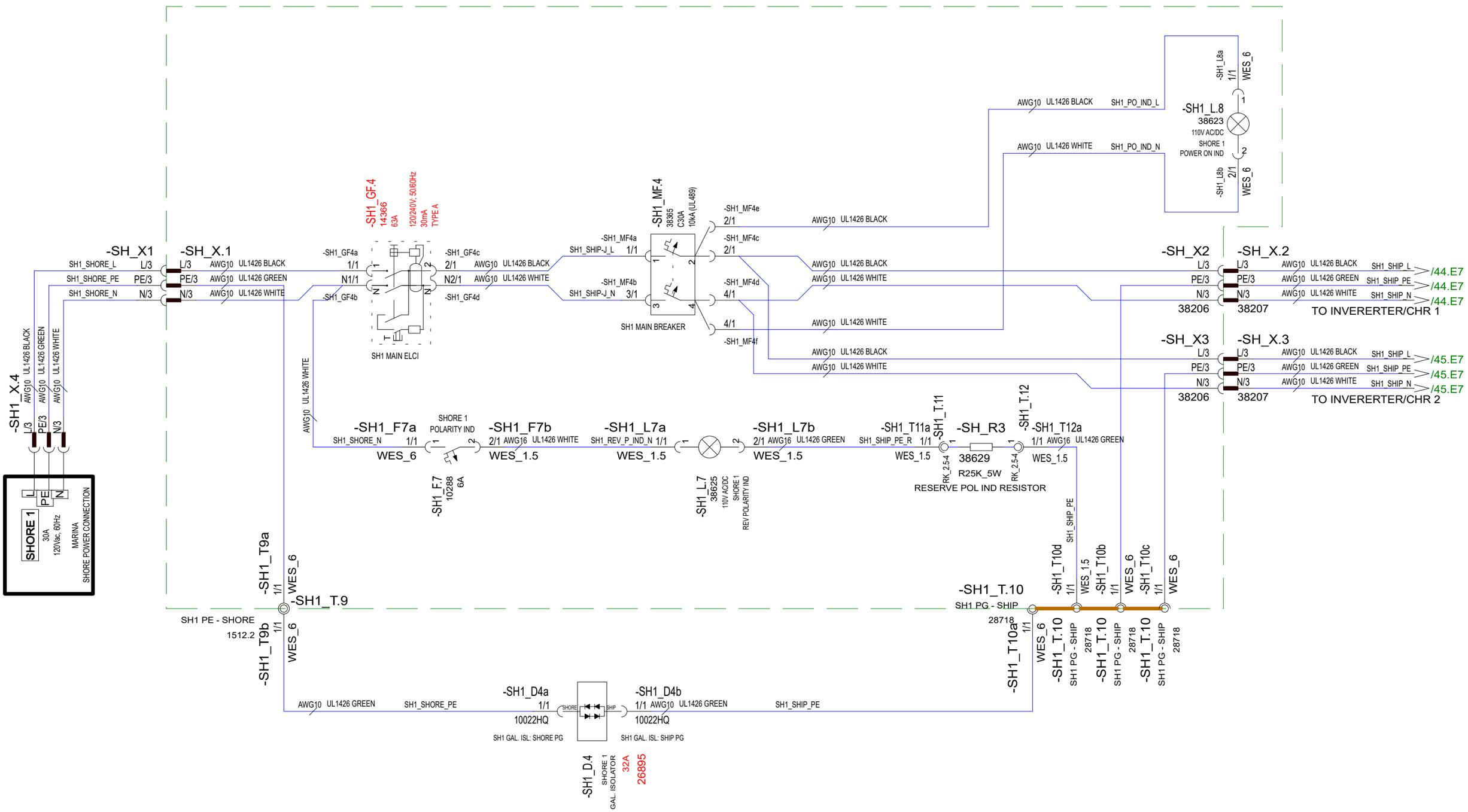

28.5.2024	TuM	C3: 2005065: Galvanic isolator changed 30A -->32A; ELCI changed 38366 GFP ->14366 RCD.	Date	30.10.2023	NAVIX	Axopar		
24.3.2023	TuM	A1: 2004274; INTRODUCED DRAWING.	Drawing by	TuM		Boat	Sub-product code	Product code / Project ID
4.7.2023	TuM	B2: 2004274; CONNECTORS ADDED, SH1 IND BRK REMOVED, IND LED CHANGED.	Sheet rev.	3		45	AC: SHORE 1 CONNECTION, USA - DIAGRAM	HL
Date of modification	Modified by	Description	Project rev.	C	Copyright by	Boat model	Title	Loc / 148 / 444 Sheet

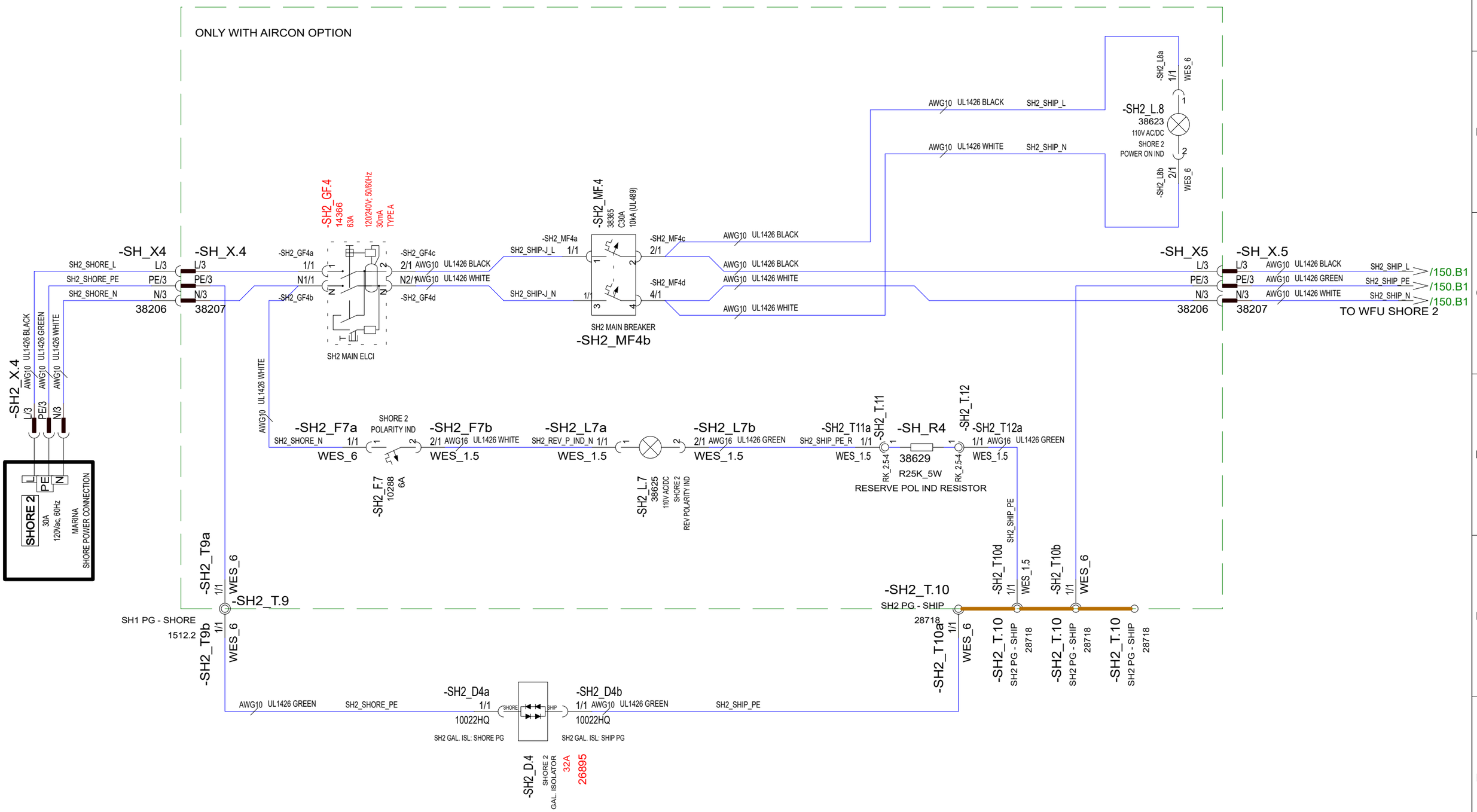

Date of modification	Modified by	Description
28.5.2024	TuM	C3: 2005065: Galvanic isolator changed 30A -->32A; ELCI changed 38366 GFP ->14366 RCD.
24.3.2023	TuM	A1: 2004274; INTRODUCED DRAWING.
6.7.2023	TuM	B2: 2004274; CONNECTORS ADDED, SH1 IND BRK REMOVED, IND LED CHANGED.

Date	30.10.2023
Drawing by	TuM
Sheet rev.	3
Project rev.	C

Copyright by

Boat	Sub-product code	Product code	Project ID
Axopar			
Boat model	Title		Loc
45	AC: SHORE 2 CONNECTION, USA - DIAGRAM		

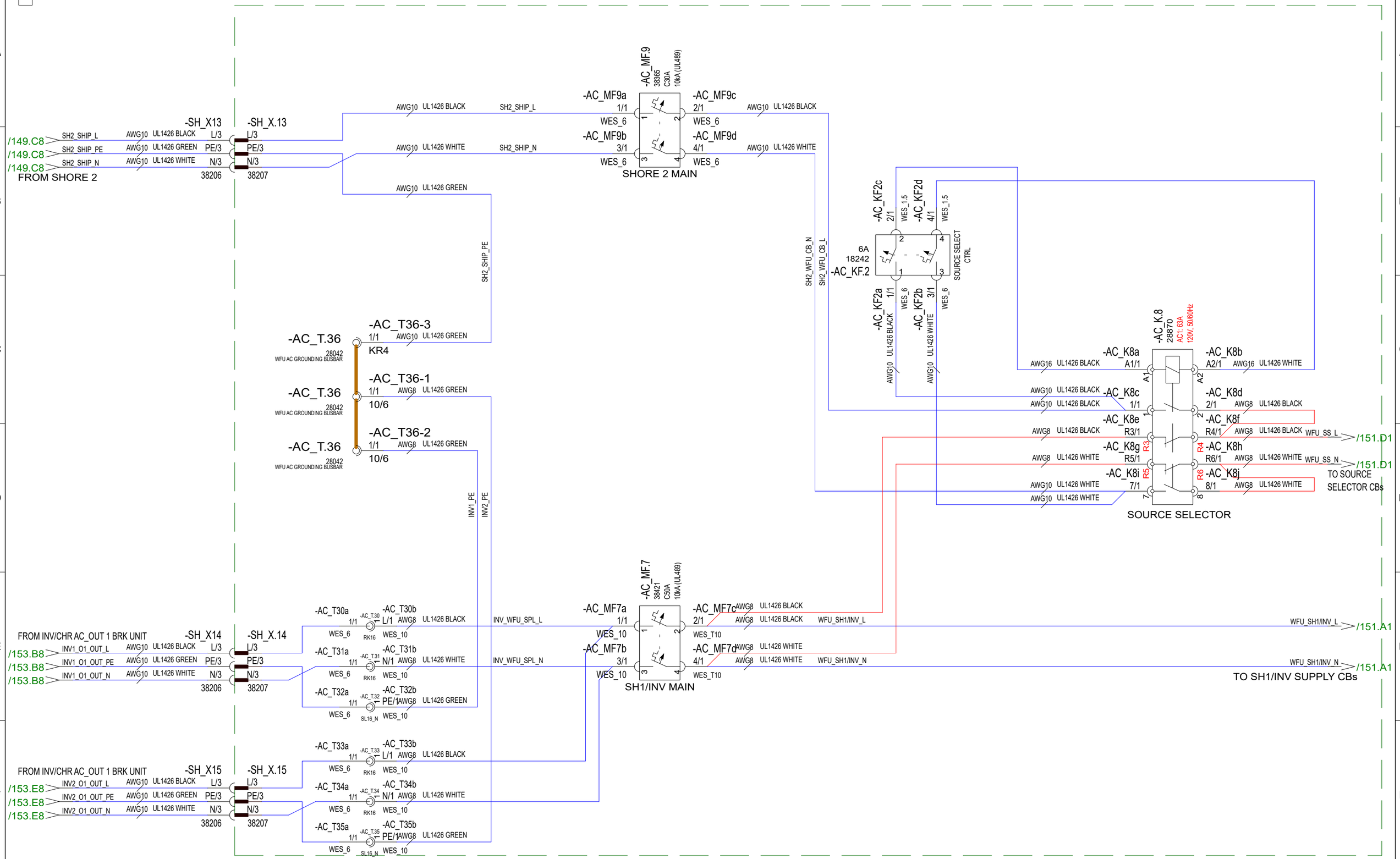

30.5.2024	TuM	C3: 2005065; AC_MF8 removed, AC_K8 type modified 40A -> 63A (AC-1), SH1/INV FEED AWG10->AWG8.	Date	30.10.2023	NAVIX	Axopar			
24.3.2023	TuM	A1: 2004274; INTRODUCED DRAWING.	Drawing by	TuM		Boat	Sub-product code	Product code	Project ID
6.7.2023	TuM	B2: 2004274; QUICK CONNECTORS ADDED.	Sheet rev.	3		45	AC: AC DISTRIBUTION BRK, USA - DIAGRAM	HL	150 / 444
Date of modification	Modified by	Description	Project rev.	C	Copyright by	Boat model	Title	Loc	Sheet

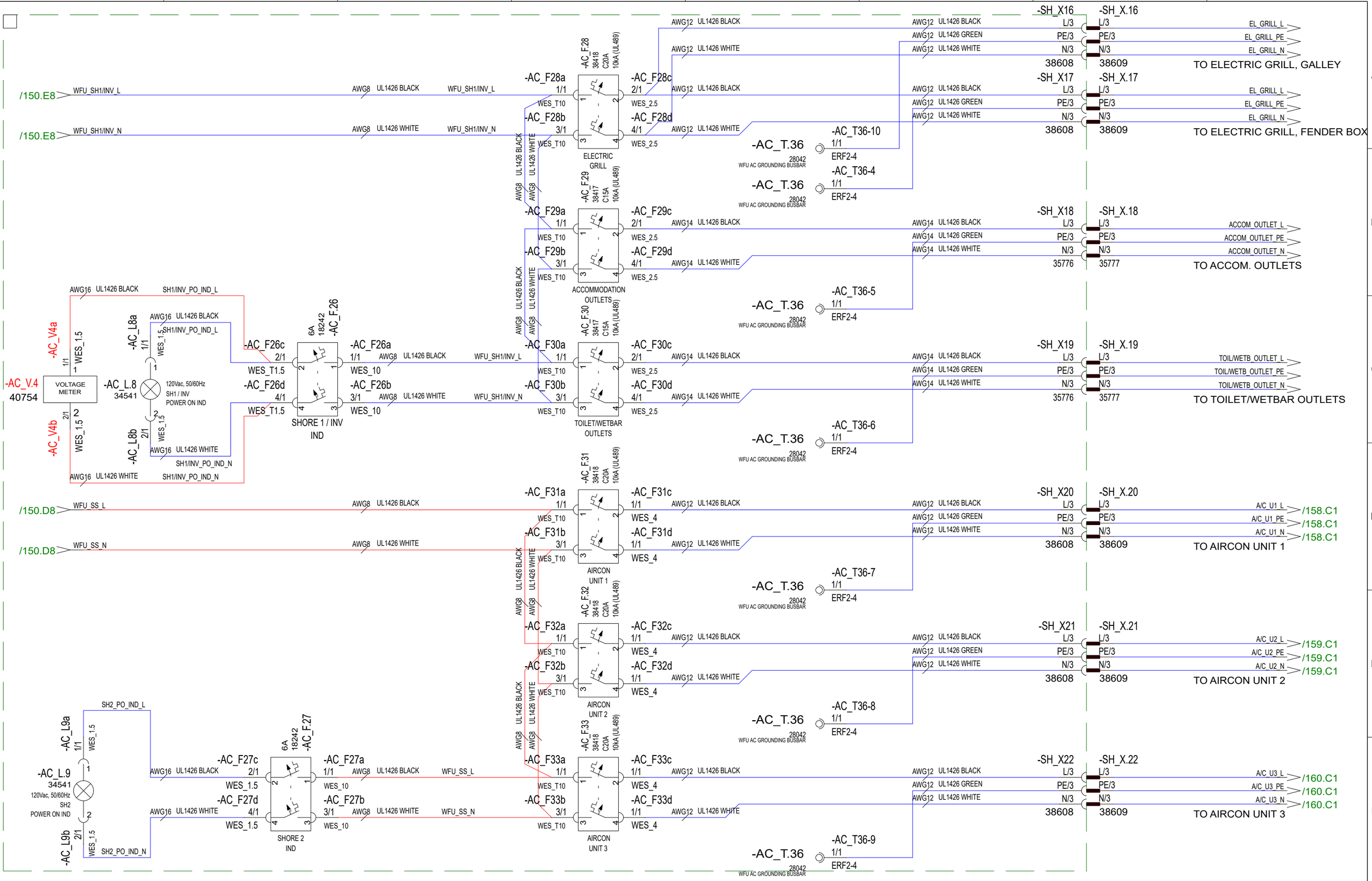

Date of modification	Modified by	Description
30.5.2024	TuM	C3: 2005065; Voltage meter, AC_V4, added, SH1/INV FEED AWG10->AWG8.
24.3.2023	TuM	A1: 2004274; INTRODUCED DRAWING.
10.7.2023	TuM	B2: 2004274; CONNECTORS ADDED.

Date	30.10.2023
Drawing by	TuM
Sheet rev.	3
Project rev.	C

NAVIX
Copyright by

Axopar			
Boat	Sub-product code	Product code	Project ID
45	AC: AC DISTRIBUTION BRK, USA - DIAGRAM	HL	151/ 444
Boat model	Title	Loc	Sheet

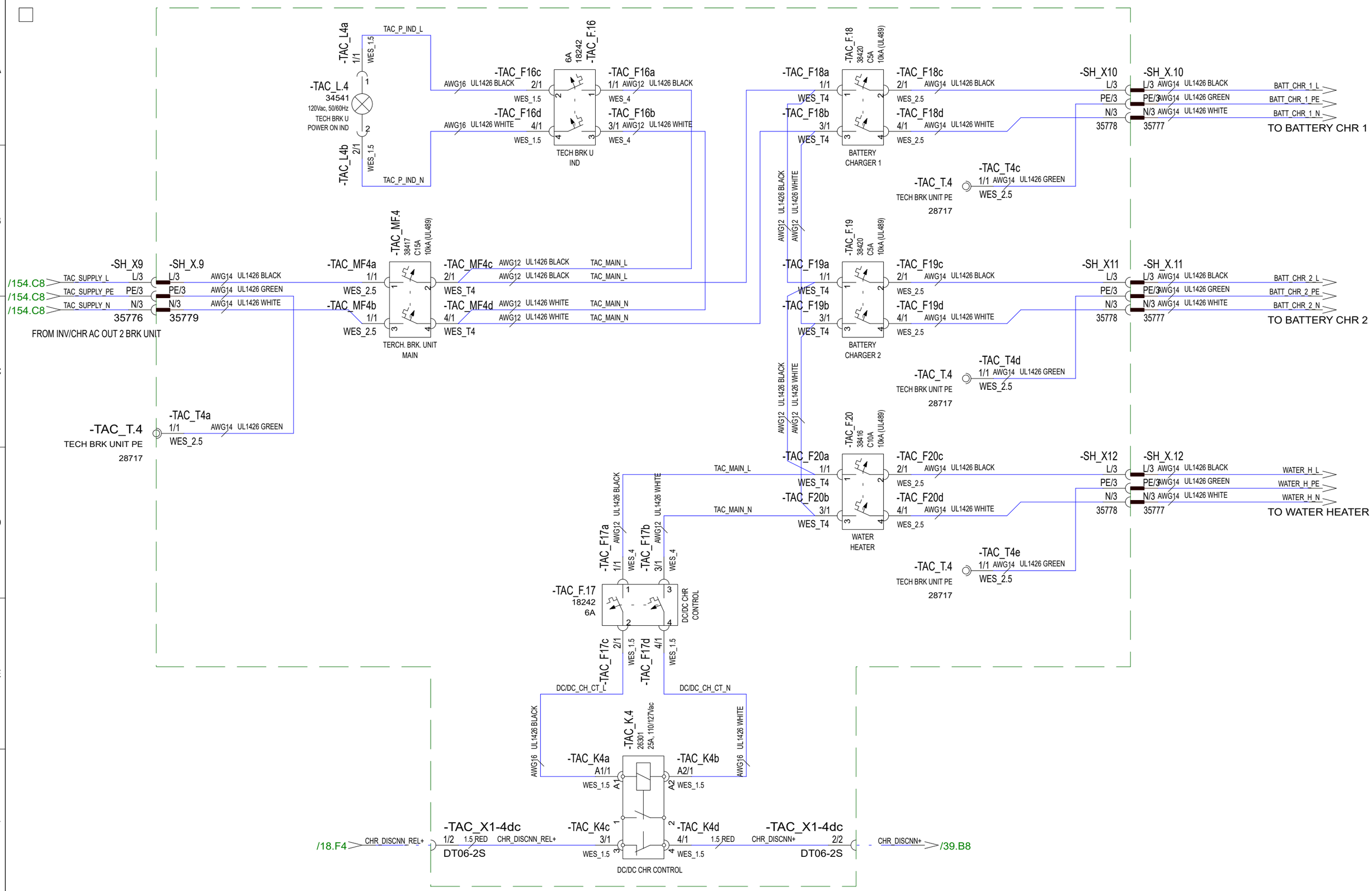

Date of modification	Modified by	Description
30.10.2023	PF	C3: 2004890; NOT MODIFIED
24.3.2023	TuM	A1: 2004274; INTRODUCED DRAWING.
6.7.2023	TuM	B2: 2004274; CONNECTORS (SH_XX) ADDED. 2nd SUPPLY REMOVED

Date	30.10.2023
Drawing by	TuM
Sheet rev.	3
Project rev.	C

NAVIX

Copyright by

Axopar				
Boat	Sub-product code	Product code	Project ID	
45	AC: TECH. AC DISTR BRK UNIT, USA - DIAGRAM	HL	152 / 444	
Boat model	Title	Loc	Sheet	

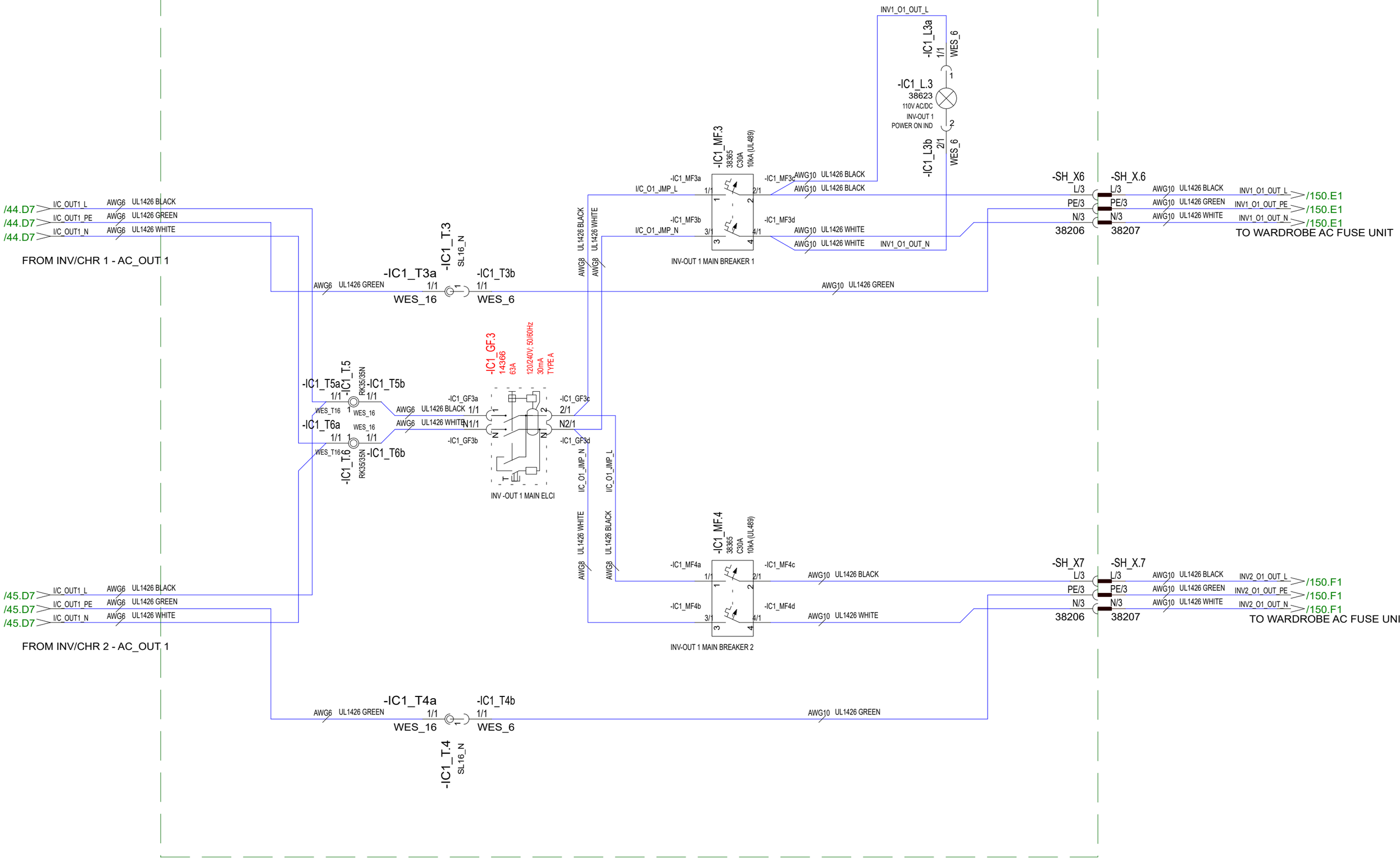

30.5.2024	TuM	C3: 2005065; ELCI changed 38366 GFP ->14366 RCD.	Date	30.10.2023	NAVIX	Axopar			
24.3.2023	TuM	A1: 2004274; INTRODUCED DRAWING.	Drawing by	TuM		Boat	Sub-product code	Product code	Project ID
6.7.2023	TuM	B2: 2004274; INV/CHR OUT1 CONNECTIONS NOW BEFORE ELCI	Sheet rev.	3		45	AC: INVERTER 1 MAIN BRK UNIT, USA - DIAGRAM		153 / 444
Date of modification	Modified by	Description	Project rev.	C	Copyright by	Boat model	Title	Loc	Sheet

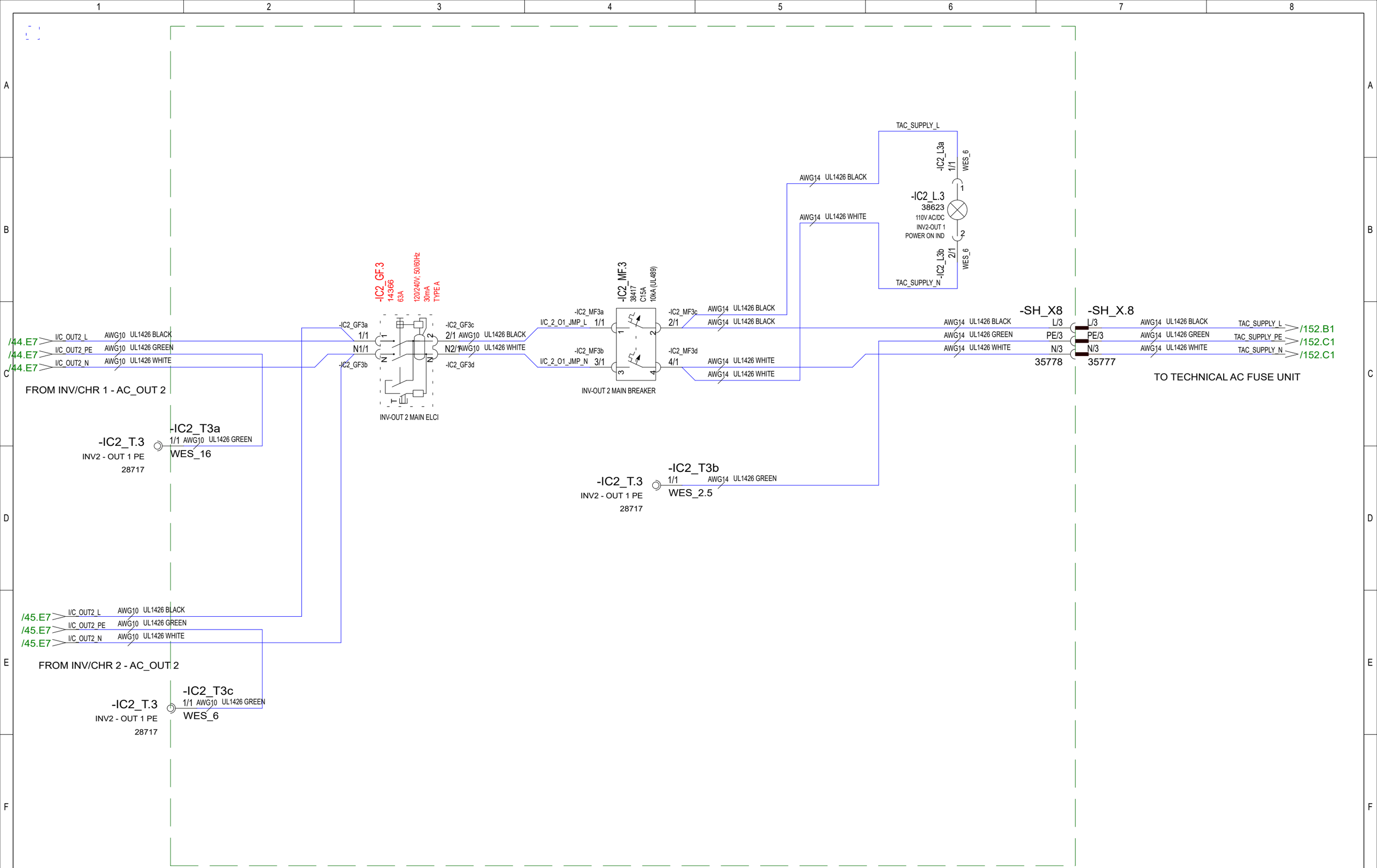

Date of modification	Modified by	Description						
30.5.2024	TuM	C3: 2005065; ELCI changed 38366 GFP ->14366 RCD.	Date	30.10.2023	NAVIX	Axopar		
24.3.2023	TuM	A1: 2004274; INTRODUCED DRAWING.	Drawing by	TuM		Boat	Sub-product code	Product code / Project ID
6.7.2023	TuM	B2: 2004274; INV/CHR OUT 2 CONNECTIONS NOW BEFORE ELCI.	Sheet rev.	3		45	AC: INVERTER 2 MAIN BRK UNIT, USA - DIAGRAM	HL
			Project rev.	C	Copyright by	Boat model	Title	Loc / Sheet 154 / 444

FWD CABIN

FWD TOILET

MAIN CABIN

AFT CABIN

30.10.2023	PF	C3: 2004890; NOT MODIFIED	Date 30.10.2023	NAVIX	Axopar			
24.3.2023	TuM	A1: 2004274; INTRODUCED DRAWING.	Drawing by TuM		Boat	Sub-product code	Product code	Project ID
30.3.2023	TuM	B2: 2004274;	Sheet rev. 3		45	AC: SOCKETS, USA - DIAGRAM	HL	155 / 444
Date of modification	Modified by	Description	Project rev. C	Copyright by	Boat model	Title	Loc	Sheet

WATER
HEATER

30.10.2023	PF	C3: 2004890; NOT MODIFIED	Date	30.10.2023	NAVIX	Axopar			
24.3.2023	TuM	A1: 2004274; INTRODUCED DRAWING.	Drawing by	TuM		Boat	Sub-product code	Product code	Project ID
30.3.2023	TuM	B2: 2004274;	Sheet rev.	3		45	AC: WATER HEATER, USA - DIAGRAM		
Date of modification	Modified by	Description	Project rev.	C	Copyright by	Boat model	Title	HL Loc	156 / 444 Sheet

WETBAR
GRILL

COVER CLOSING
CUT-OFF SWITCH
FOR Vac POWER

FENDEX BOX GRILL
GRILL

30.10.2023	PF	C3: 2004890; NOT MODIFIED	Date 30.10.2023	NAVIX Copyright by	Axopar Boat	Sub-product code	Product code	Project ID
24.3.2023	TuM	A1: 2004274; INTRODUCED DRAWING.	Drawing by TuM		45 Boat model	AC: ELECTRICAL GRILL, USA - DIAGRAM Title	HL Loc	157 / 444 Sheet
30.3.2023	TuM	B2: 2004274;	Sheet rev. 3					
Date of modification	Modified by	Description	Project rev. C					

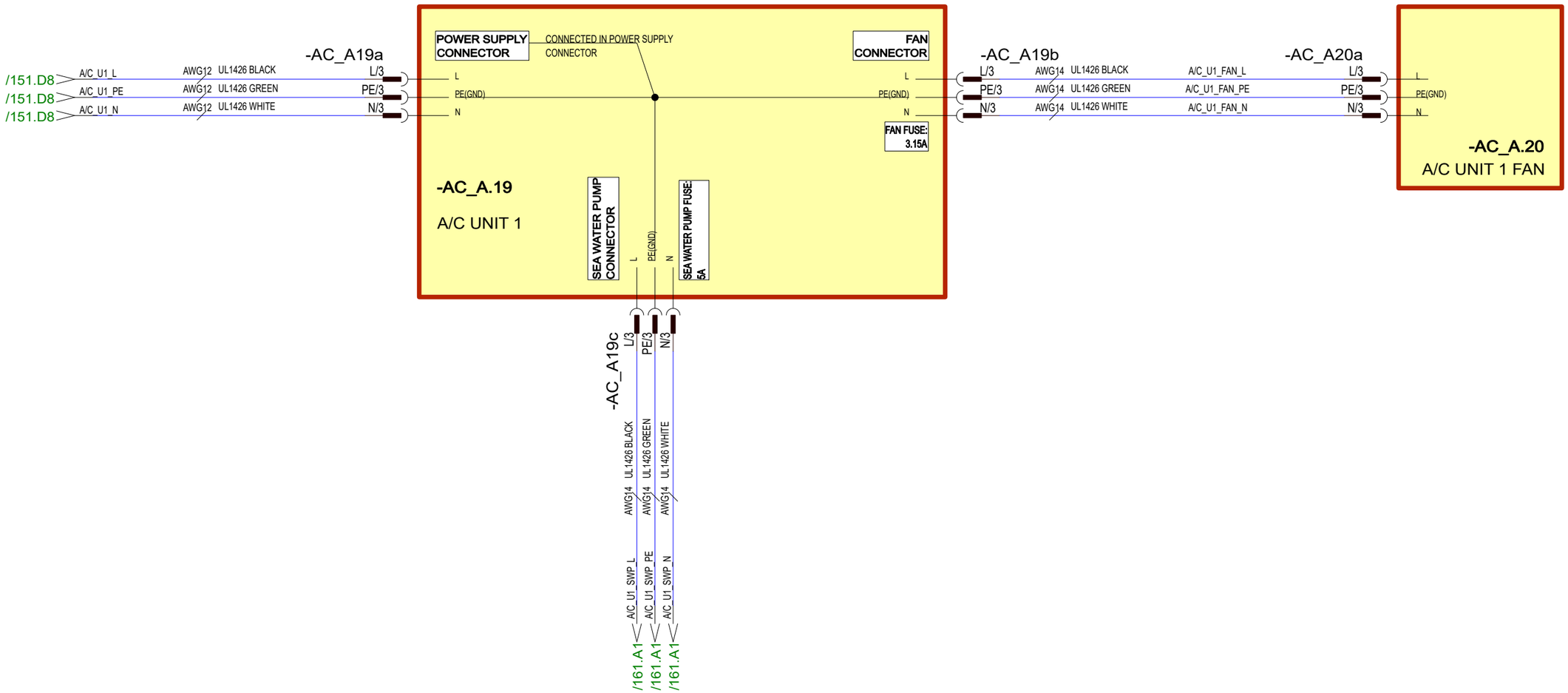

30.10.2023	PF	C3: 2004890; NOT MODIFIED	Date	30.10.2023	NAVIX	Axopar			
24.3.2023	TuM	A1: 2004274; INTRODUCED DRAWING.	Drawing by	TuM		Boat	Sub-product code	Product code	Project ID
30.3.2023	TuM	B2: 2004274;	Sheet rev.	3		45	AC: A/C UNIT 1, USA - DIAGRAM	HL	158 / 444
Date of modification	Modified by	Description	Project rev.	C	Copyright by	Boat model	Title	Loc	Sheet

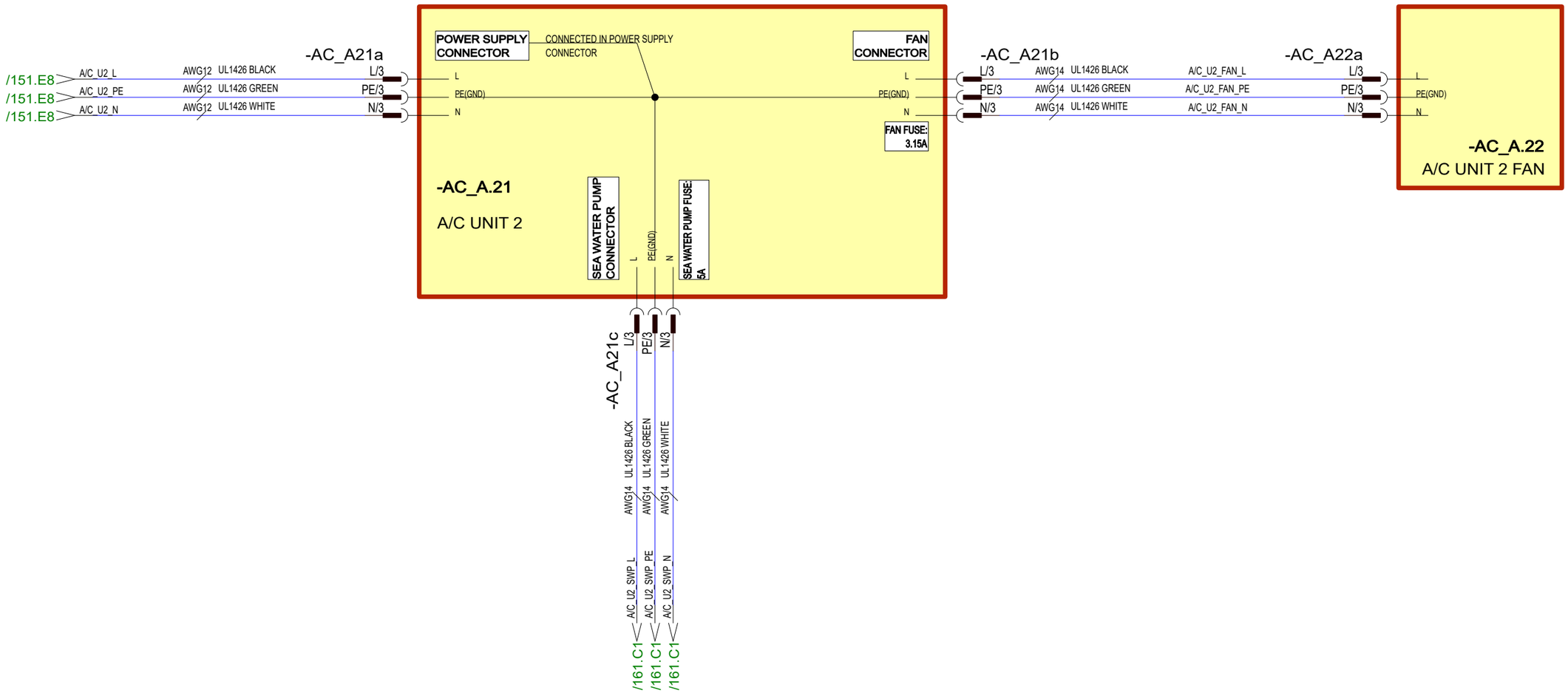

30.10.2023	PF	C3: 2004890; NOT MODIFIED	Date	30.10.2023	NAVIX	Axopar			
24.3.2023	TuM	A1: 2004274; INTRODUCED DRAWING.	Drawing by	TuM					
30.3.2023	TuM	B2: 2004274;	Sheet rev.	3		45	AC: A/C UNIT 2, USA - DIAGRAM	HL	159 / 444
Date of modification	Modified by	Description	Project rev.	C	Copyright by	Boat model	Title	Loc	Sheet

Boat | Sub-product code | Product code | Project ID

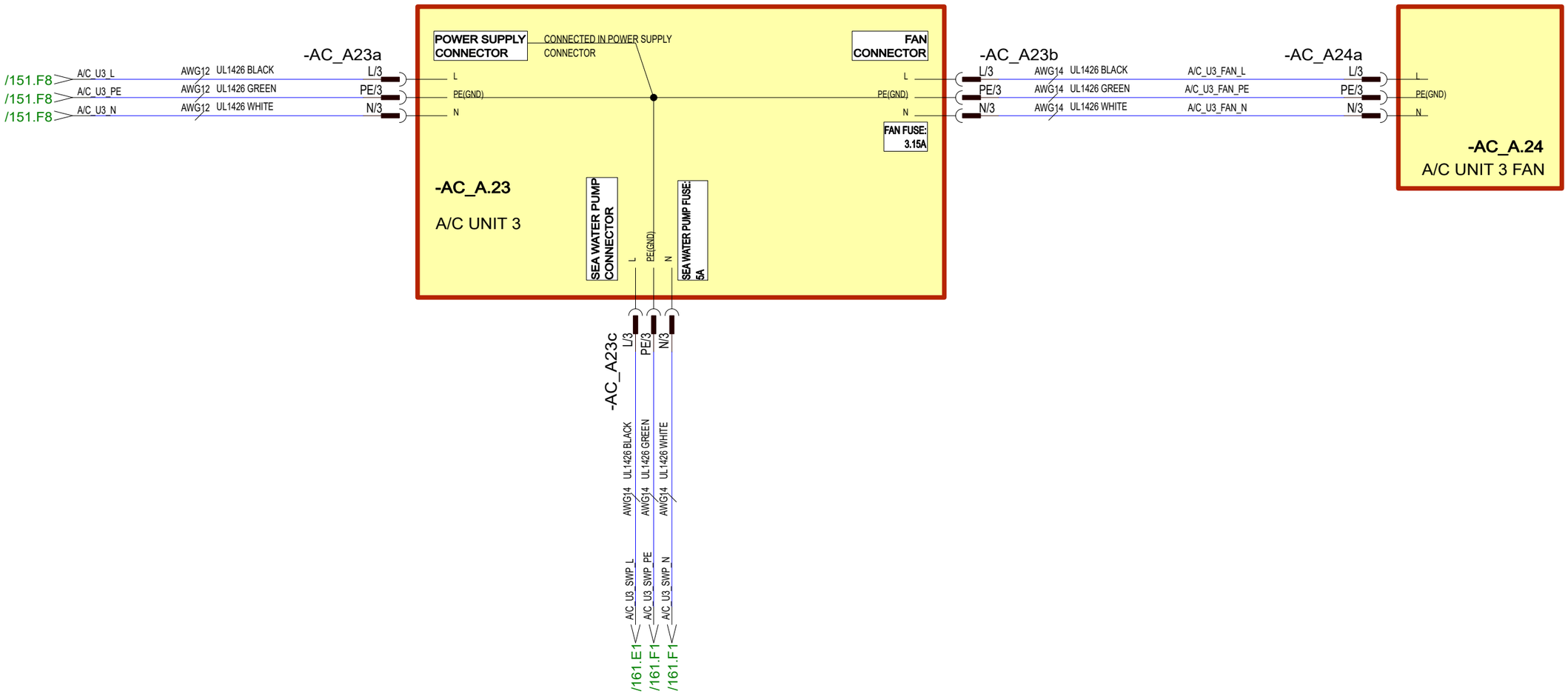

30.10.2023	PF	C3: 2004890; NOT MODIFIED	Date	30.10.2023	NAVIX	Axopar			
24.3.2023	TuM	A1: 2004274; INTRODUCED DRAWING.	Drawing by	TuM		Boat	Sub-product code	Product code	Project ID
30.3.2023	TuM	B2: 2004274;	Sheet rev.	3		45	AC: A/C UNIT 3, USA - DIAGRAM	HL	160 / 444
Date of modification	Modified by	Description	Project rev.	C	Copyright by	Boat model	Title	Loc	Sheet

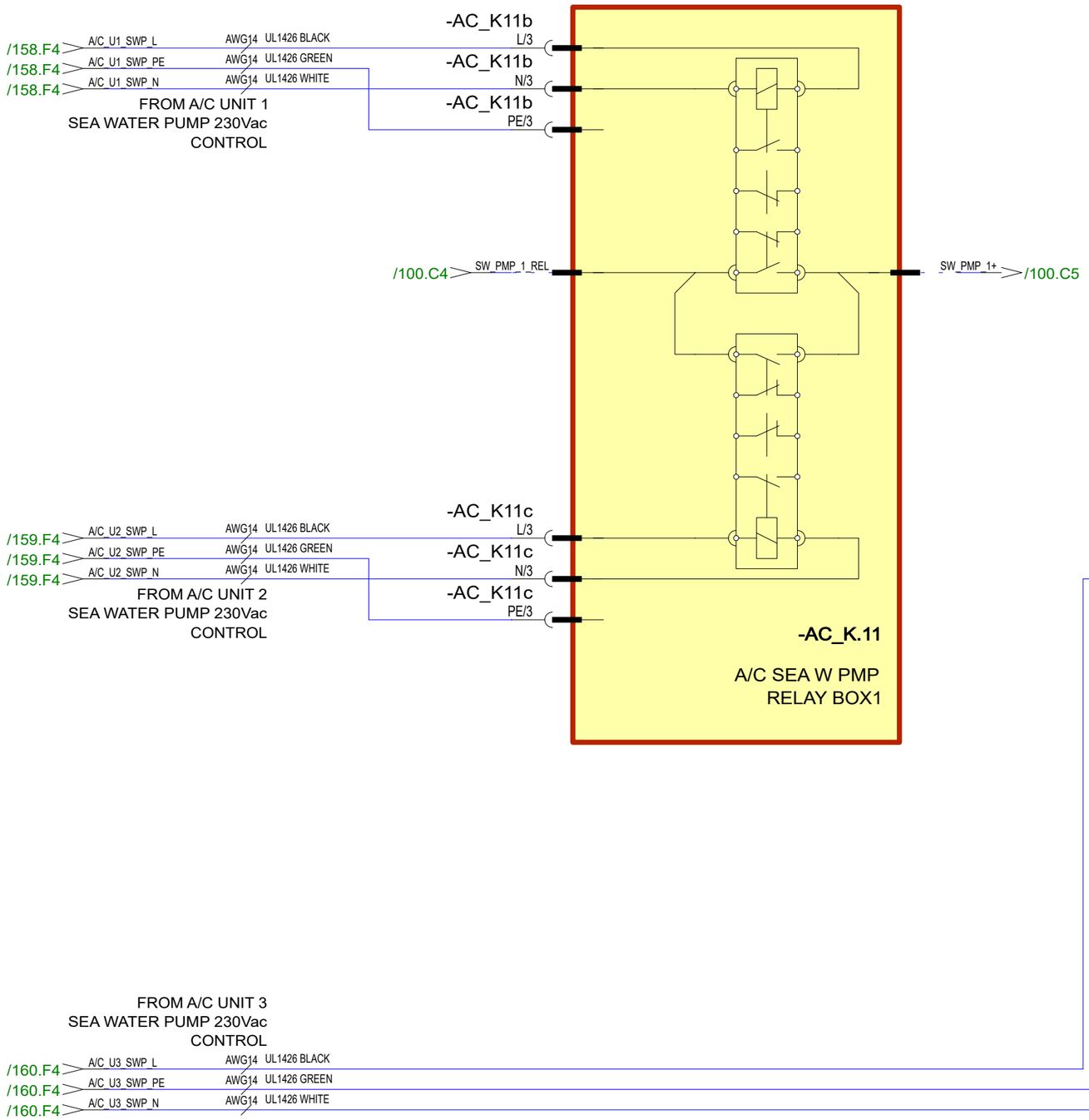

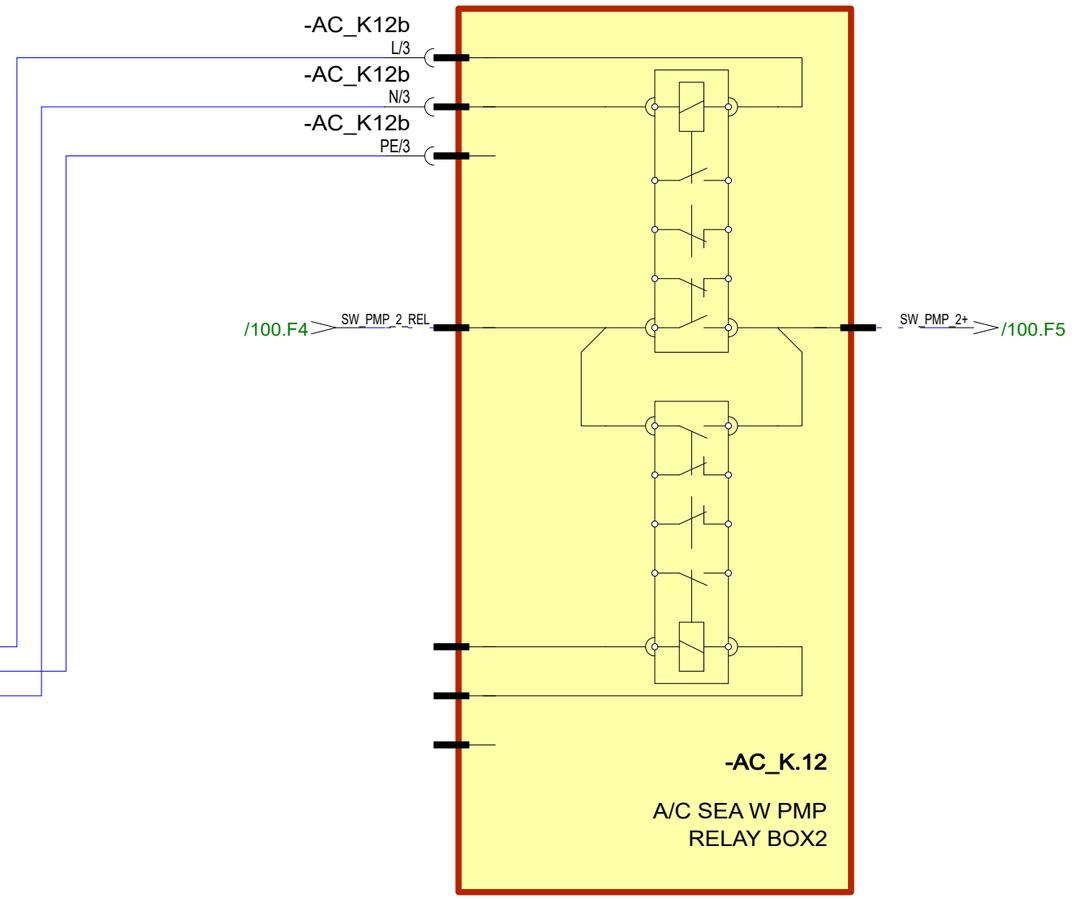

30.10.2023	PF	C3: 2004890; NOT MODIFIED	Date	30.10.2023	NAVIX	Axopar			
24.3.2023	TuM	A1: 2004274; INTRODUCED DRAWING.	Drawing by	TuM					
30.3.2023	TuM	B2: 2004274;	Sheet rev.	3		45	AC: A/C SEA W PUMP RELAY BOX, USA - DIAGRAM	HL	161/ 444
Date of modification	Modified by	Description	Project rev.	C	Copyright by	Boat model	Title	Loc	Sheet

Boat | Sub-product code | Product code | Project ID

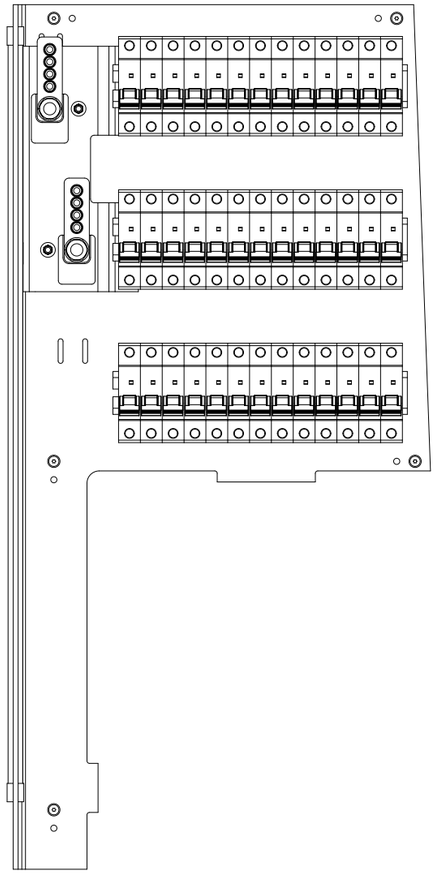

36414 Axopar 45 WARDROBE DC FUSE PANEL

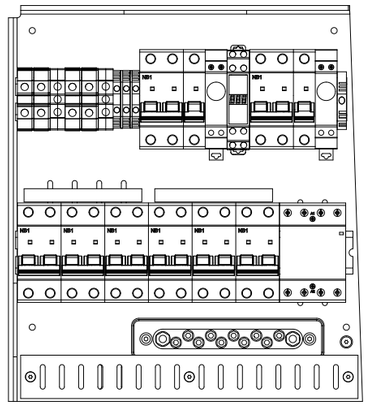

36415 Axopar 45 ZERO EM WARDROBE AC BRK PANEL - EU

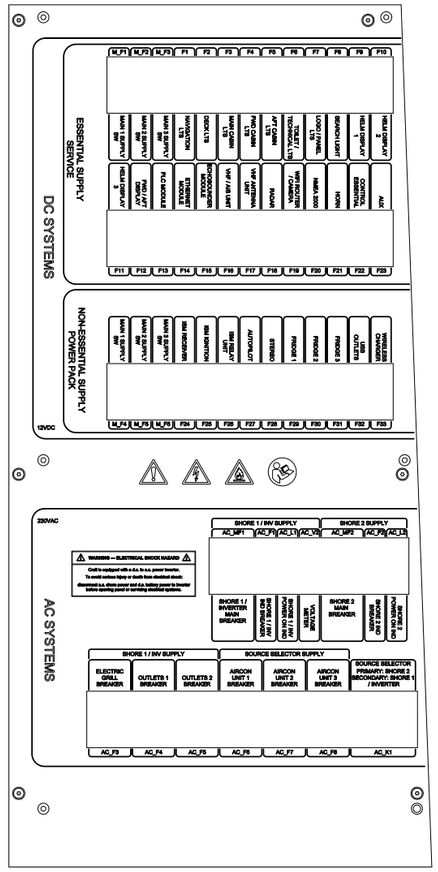

36416 Axopar 45 WARDROBE FUSE PANEL COVER - EU (WOC)

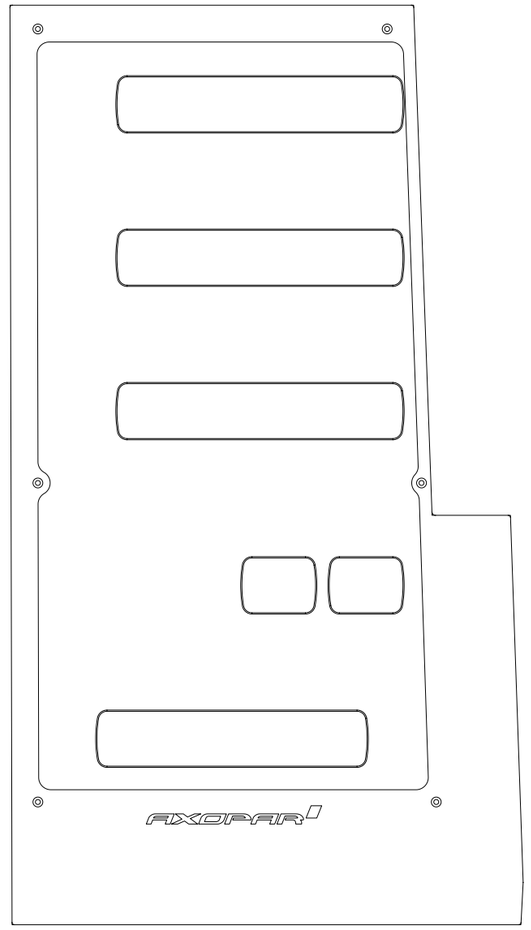

36453 AXOPAR_45_WARDROBE_FUSE_PANEL_WALL_V1

PACK ALL PRODUCTS TO SAME PACKAGE.

6.6.2024	TuM	C3: 2005065; 36415 & 36416 UPDATED.	Date	17.2.2022	NAVIX	Axopar		36369	
13.4.2023	TuM	A1: 2004274; 36453 PANEL ADDED	Drawing by	TuM		Boat	Sub-product code	Product code	Project ID
5.6.2023	TuM	B2: 2004274; 36414 & 36416 UPDATED.	Sheet rev.	3		45	ZERO EM. WARDROBE FUSE PANEL - EU	HL	162 / 444
Date of modification	Modified by	Description	Project rev.	C	Copyright by	Boat model	Title	Loc	Sheet

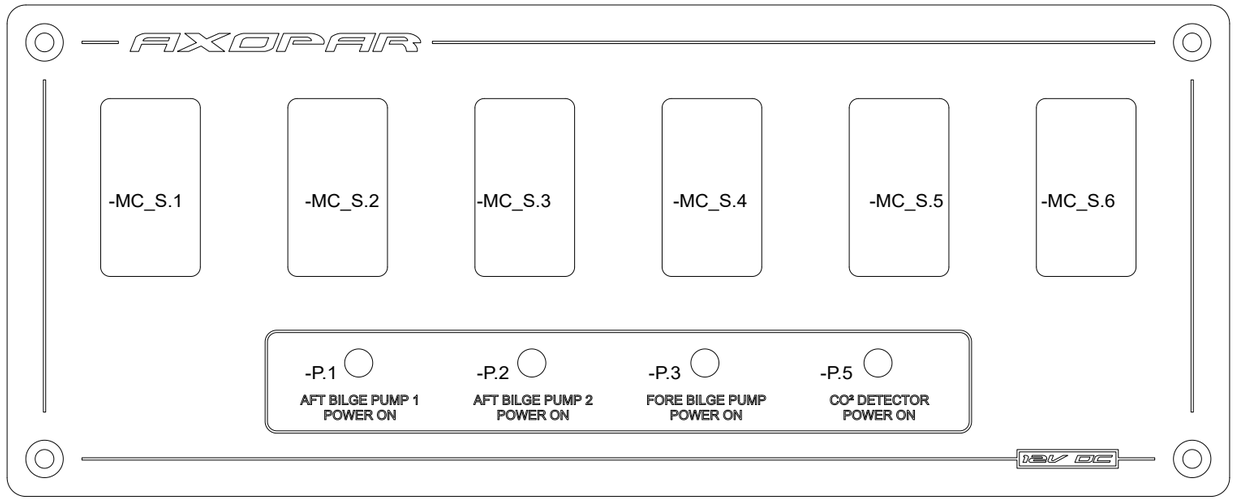

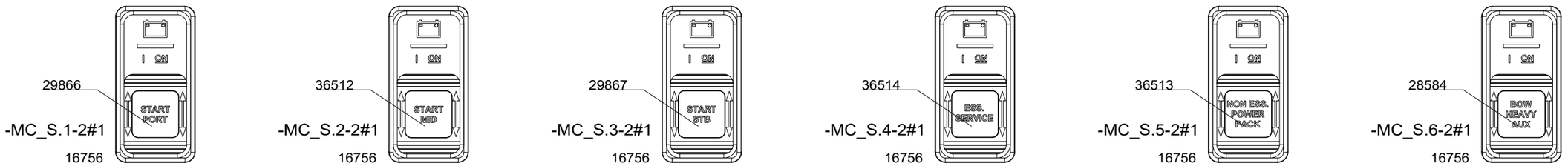

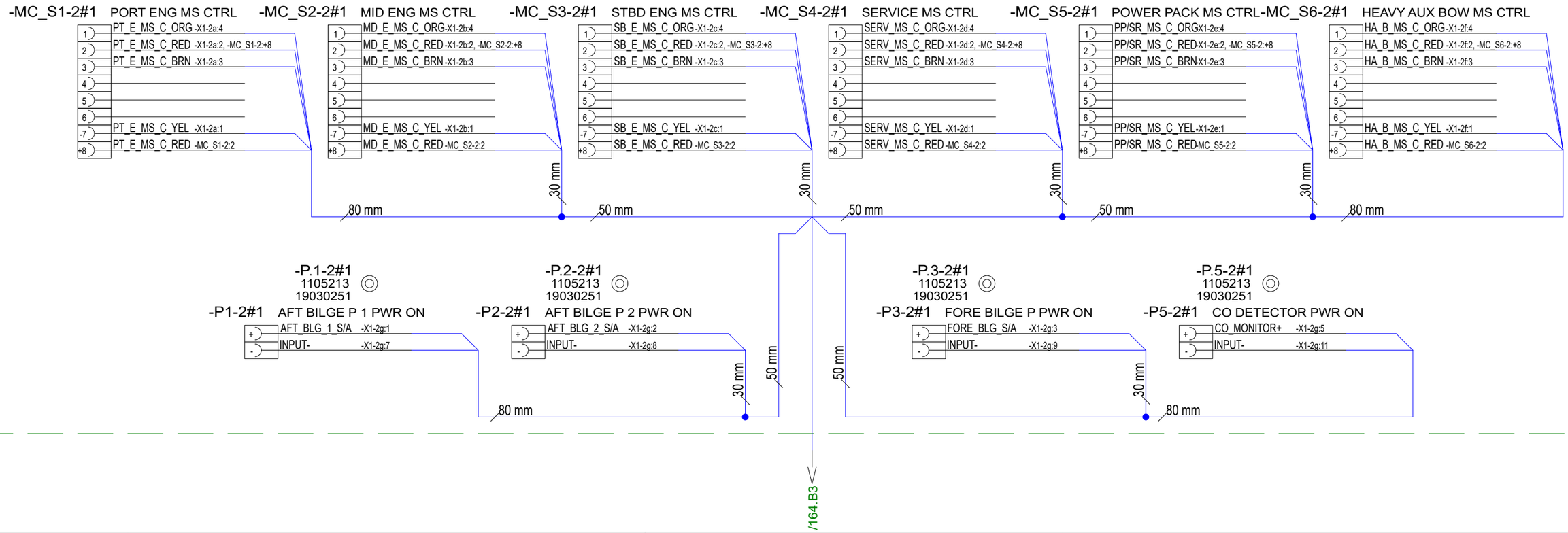

28.2.2022	TuM	A1: 2003713; INTRODUCED DRAWING.	Date	28.2.2022	NAVIX	Axopar	36515	36370	
5.5.2023	RK	B1: 2004274; NOT MODIFIED.	Drawing by	TuM		Boat	Sub-product code	Product code	Project ID
31.5.2024	TuM	C1: 2005065; NOT MODIFED.	Sheet rev.	1		45	MAIN SW UNIT	HL	163 / 444
Date of modification	Modified by	Description	Project rev.	C	Copyright by	Boat model	CONTROL PANEL - ZERO EM. Title	Loc	Sheet

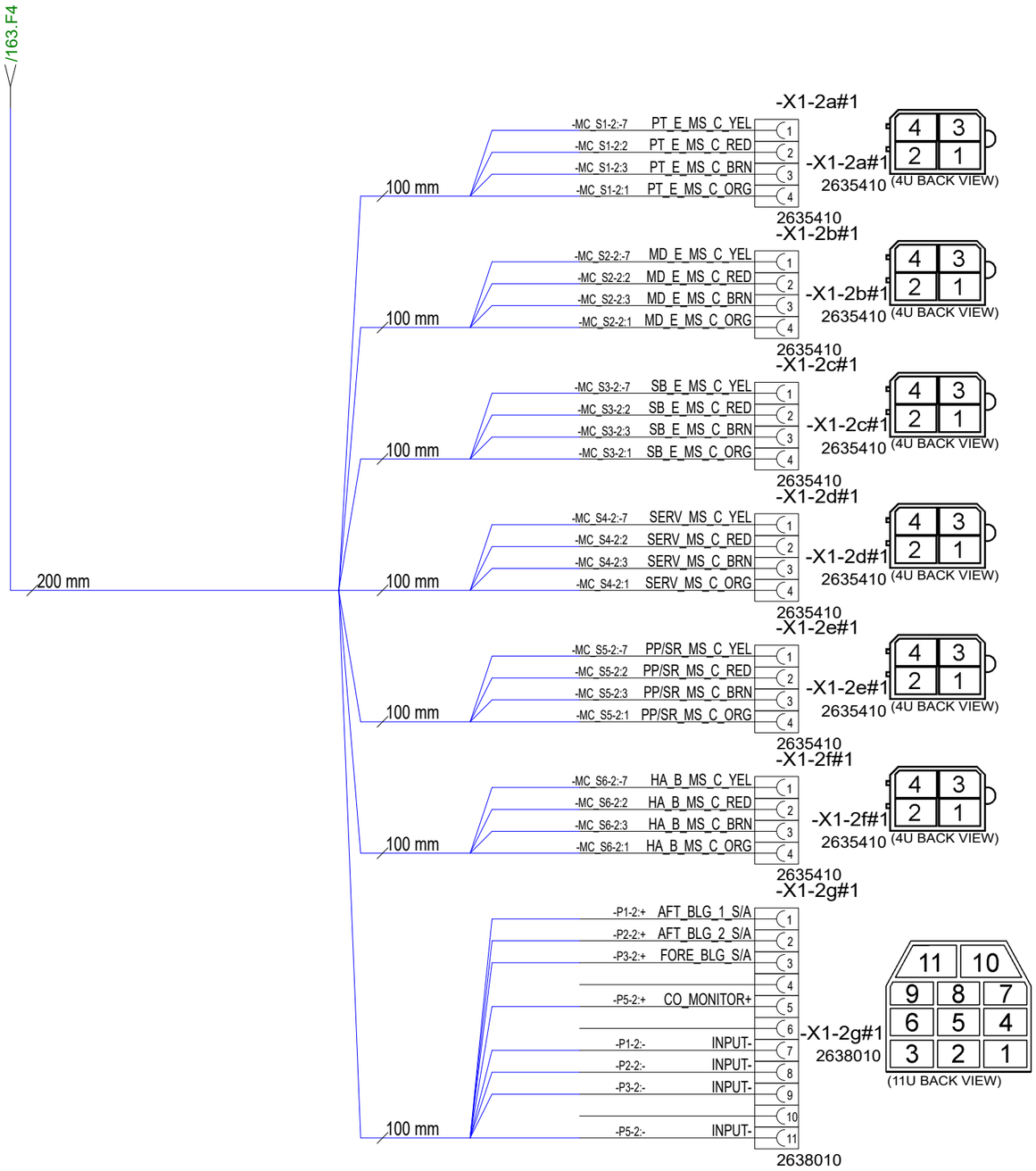

28.2.2022	TuM	A1: 2003713; INTRODUCED DRAWING.	Date	28.2.2022	NAVIX	Axopar	36515	36370	
5.5.2023	RK	B1: 2004274; NOT MODIFIED.	Drawing by	TuM		Boat	Sub-product code	Product code	Project ID
31.5.2024	TuM	C1: 2005065; NOT MODIFED.	Sheet rev.	1		45	MAIN SW UNIT	HL	164 / 444
Date of modification	Modified by	Description	Project rev.	C	Copyright by	Boat model	CONTROL PANEL - ZERO EM.	Loc	Sheet
							Title		

PACK ALL PRODUCTS TO SAME PACKAGE

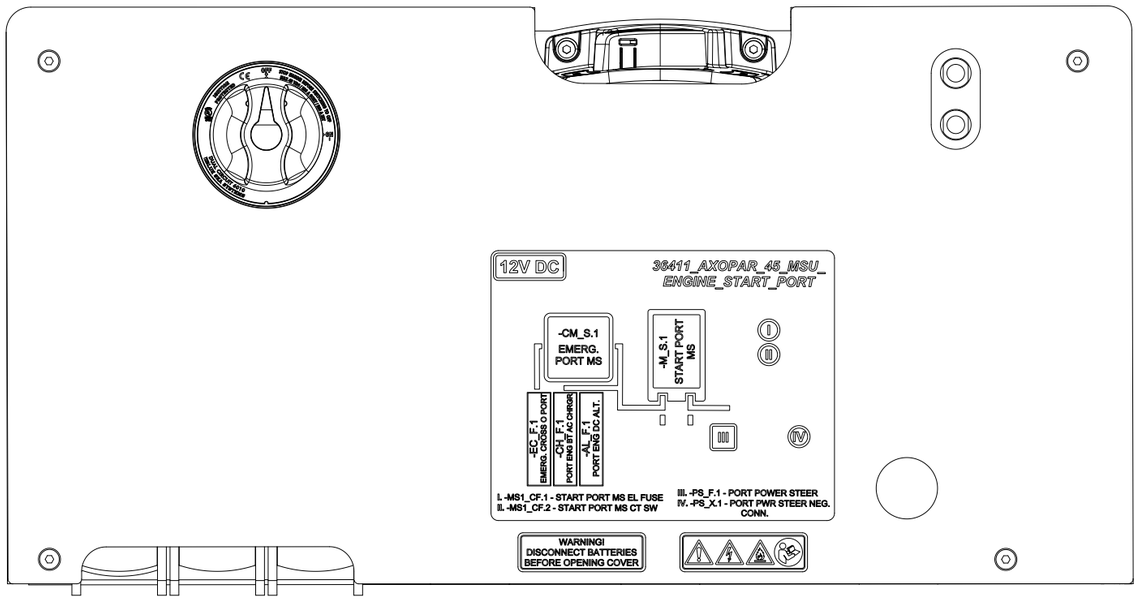

36411 MSU ENGINE START - PORT

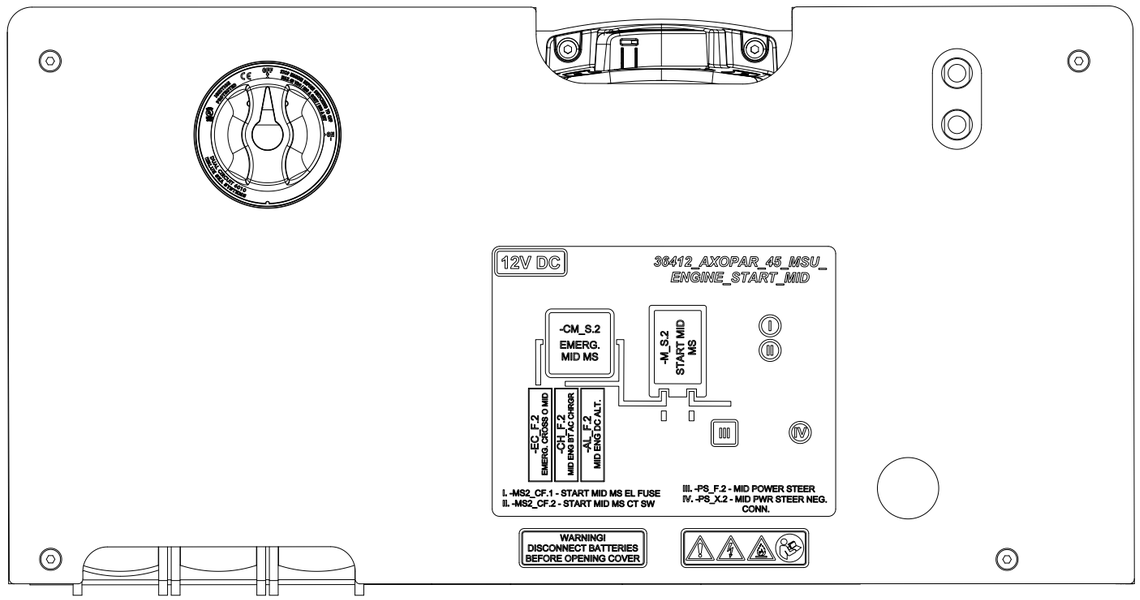

36412 MSU ENGINE START - MID

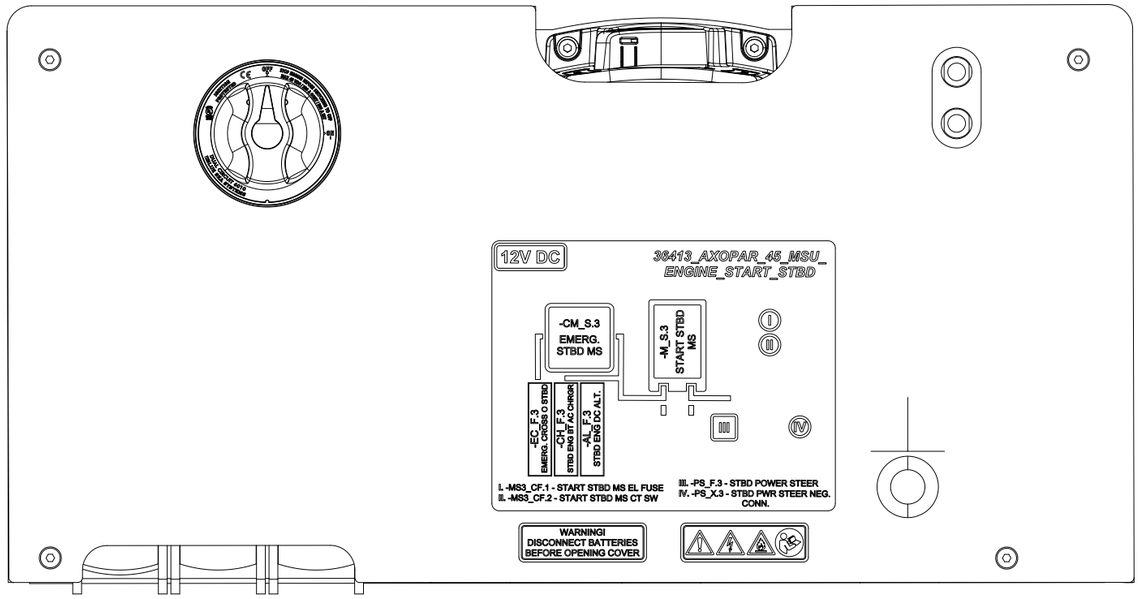

36413 MSU ENGINE START - STBD

Date of modification	Modified by	Description					
5.5.2023	RK	B1: 2004274; INTRODUCED DRAWING.	Date	4.5.2023	NAVIX	Axopar	
6.6.2024	TuM	C1: 2005065; NOT MODIFIED.	Drawing by	TuM		Boat	Sub-product code: —
			Sheet rev.	1		45	Product code: 36410
			Project rev.	C	Copyright by	Boat model	Project ID: —
						MSU ENGINE START	HL: —
						Title	Loc: —
							Sheet: 165 / 444

GENERAL LAYOUT & LABELS

WIRE ROUTES / CABLE TIES

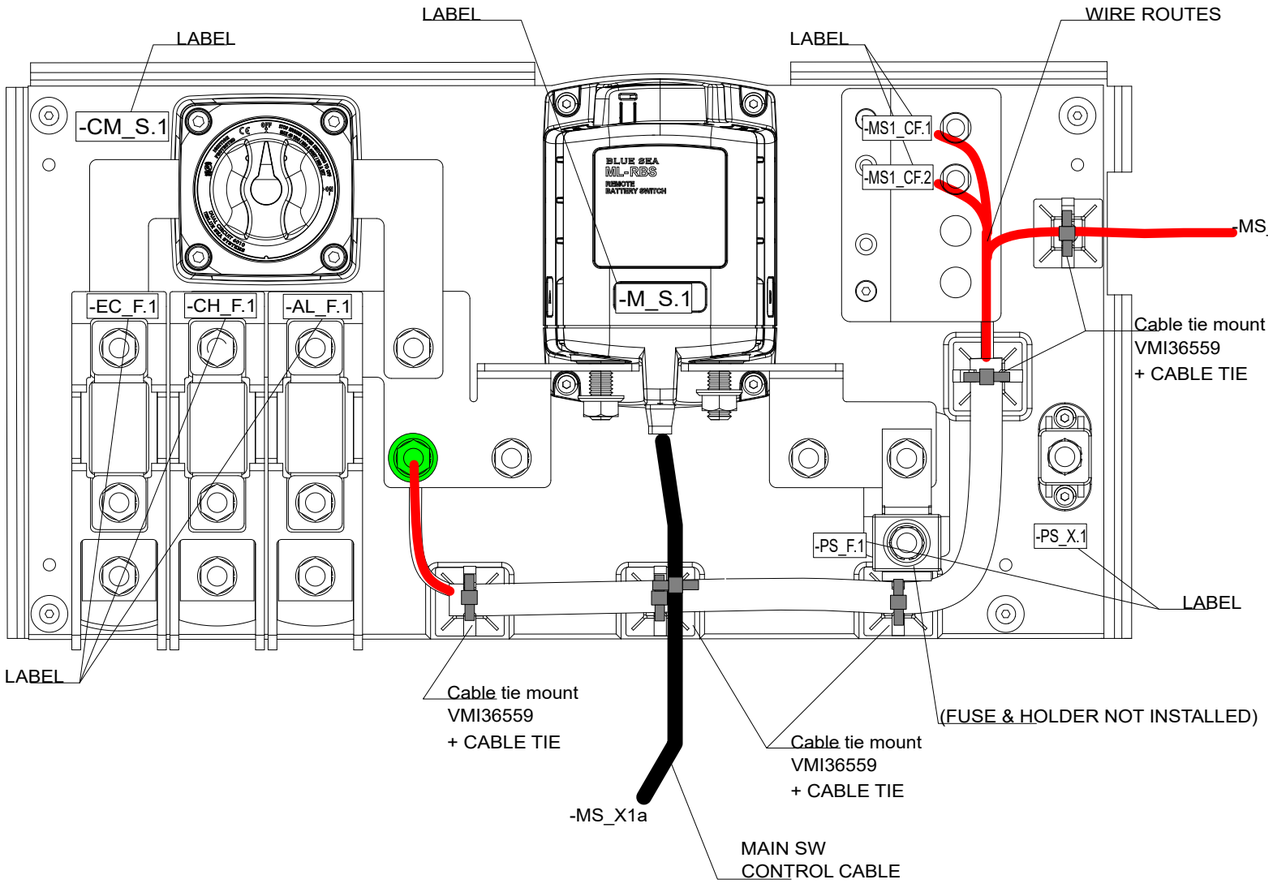

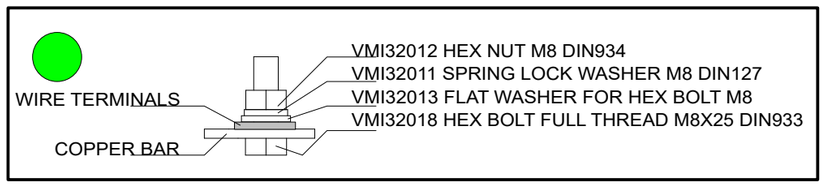

COVER LABEL INSTALLATION

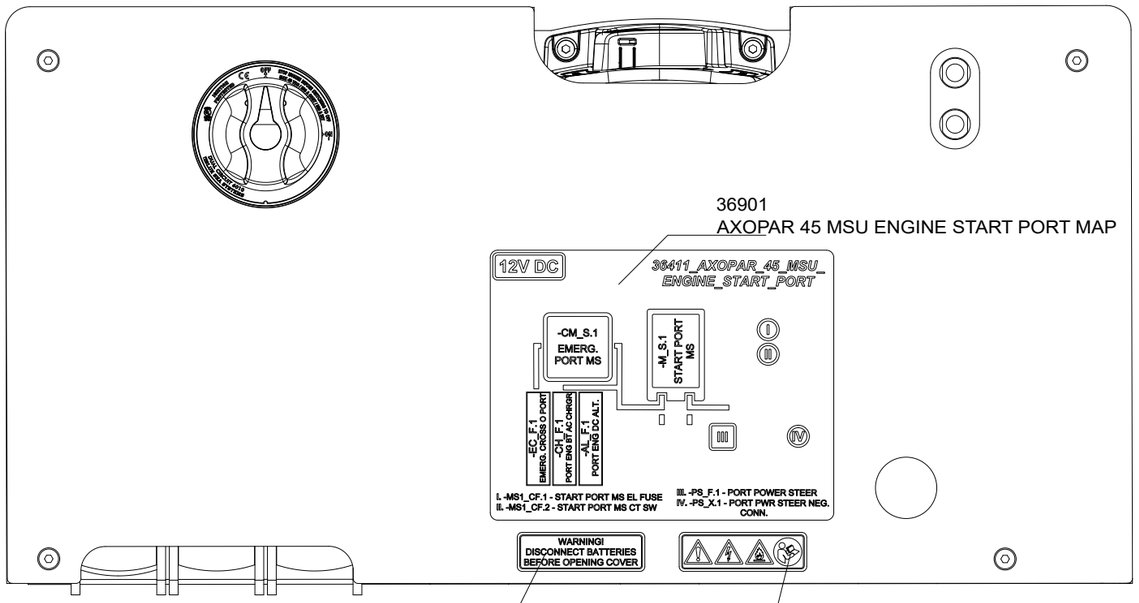

14.6.2022	TuM	A1: 2003713; INTRODUCED DRAWING.	Date	14.6.2022	NAVIX	Axopar	SEE EXP VIEW	36411	
3.5.2023	RK	B1: 2004274; NOT MODIFIED.	Drawing by	TuM		Boat	Sub-product code	Product code	Project ID
4.12.2023	PF	C2: 2004890; V8 fuses moved to product 40364	Sheet rev.	2		45	MSU ENGINE START - PORT	HL	166 / 444
Date of modification	Modified by	Description	Project rev.	C	Copyright by	Boat model	Title	Loc	Sheet

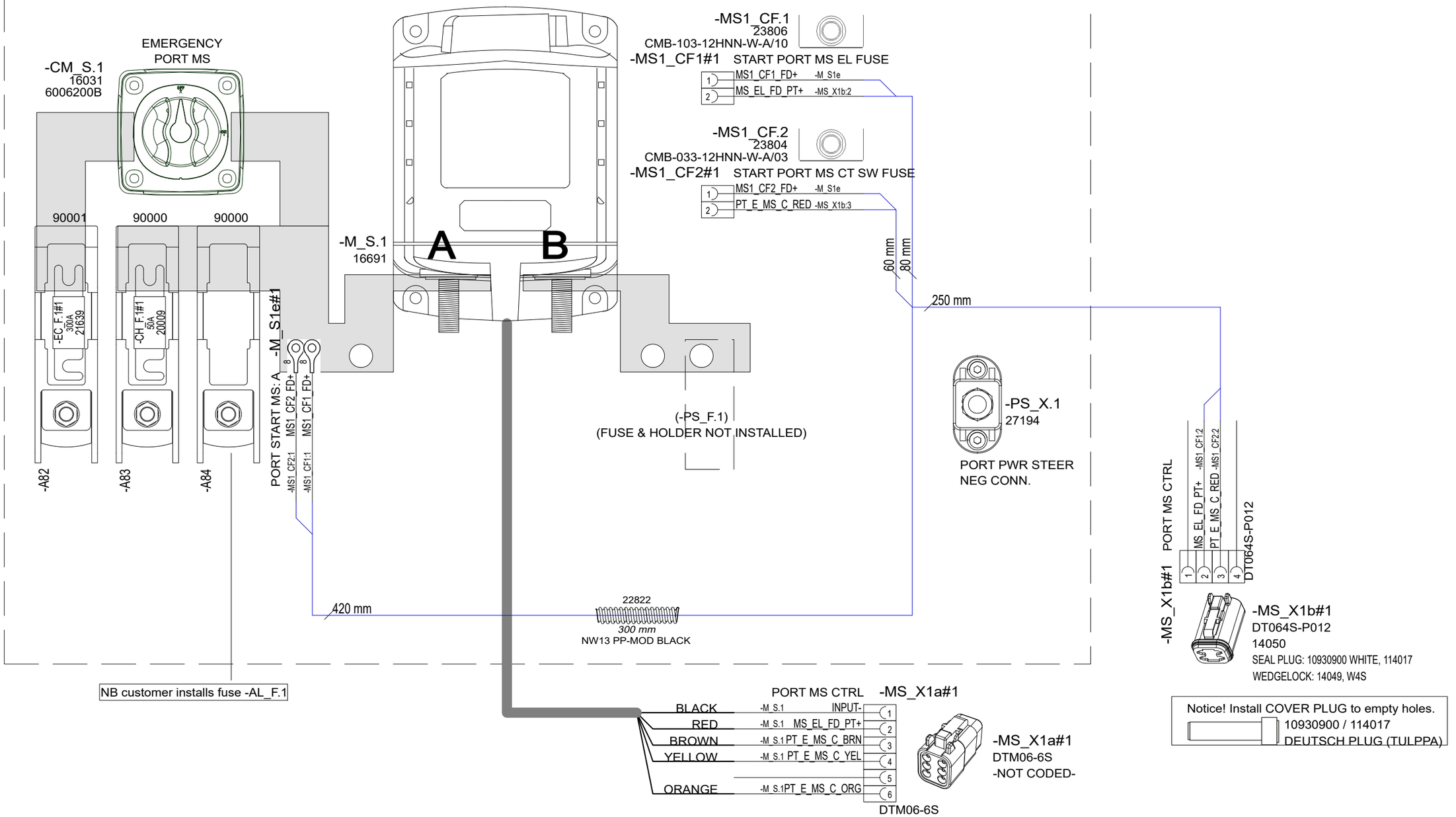

14.6.2022	TuM	A1: 2003713; INTRODUCED DRAWING.	Date	14.6.2022	NAVIX	Axopar	SEE EXP VIEW	36411	
3.5.2023	RK	B1: 2004274; NOT MODIFIED.	Drawing by	TuM		Boat	Sub-product code	Product code	Project ID
4.12.2023	PF	C2: 2004890; V8 fuses moved to product 40364	Sheet rev.	2		45	MSU ENGINE START - PORT	HL	167 / 444
Date of modification	Modified by	Description	Project rev.	C	Copyright by	Boat model	Title	Loc	Sheet

EXP VIEW

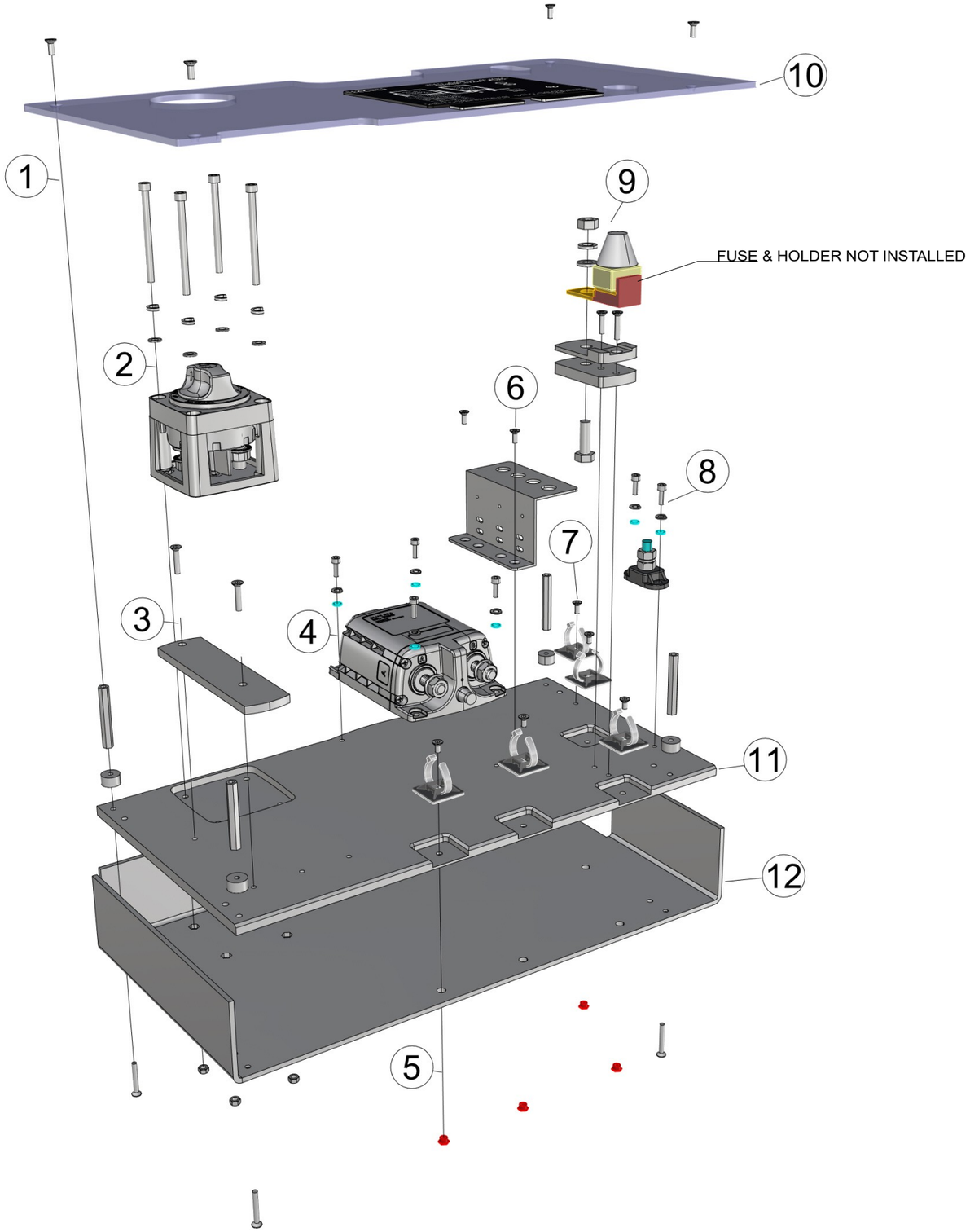

36411_AXOPAR_45_MSU_ENGINE_START

1. 4PCS VMI30914 COUNTERSUNK HEAD SCREW HEX SOCKET M4X10 DIN7991
   4PCS VMI32041 EXTENSION BOLT M4 L-50
   4PCS 29063_NAVIX_LINE_8MM_WASHER_V1
   4PCS VMI30920 COUNTERSUNK HEAD SCREW HEX SOCKET M4X30 DIN7991

2. 4PCS VMI35428 HEX SOCKET HEAD CAP SCREW M5X65 DIN912
   4PCS VMI31540 SPRING LOCK WASHER M5 DIN127
   4PCS VMI31541 FLAT WASHER FOR HEX BOLTS AND NUTS M5 DIN125A
   - MAIN SWITCH (AS IN DIAGRAM) -
   4PCS VMI31538 HEX NUT M5 DIN934

3. 2PCS VMI30918 COUNTERSUNK HEAD SCREW HEX SOCKET M4X20 DIN7991
 (USE WITH ANL-HOLDER INSTEAD OF REGULAR ONES!)
   1PC 36824_NAVIX_LINE_ANL_HOLDER_TYPE_SERIES_RAISER_V1
 (PLACE UNDER ANL-HOLDER)

4. 4PCS VMI30944 HEX SOCKET HEAD CAP SCREW M4X12 DIN912
   4PCS VMI30904 SPRING LOCK WASHER M4 DIN127
   4PCS VMI30906 FLAT WASHER FOR HEX BOLTS AND NUTS M4 DIN125A
 - MAIN SWITCH (AS IN DIAGRAM) -

5. 4PCS VMI30913 COUNTERSUNK HEAD SCREW HEX SOCKET M4X8 DIN7991
   - ZIPTIE AND -HOLDER (AS IN DIAGRAM) -
   4PCS 9872 ETSOS M4X4

6. 2PCS VMI30914 COUNTERSUNK HEAD SCREW HEX SOCKET M4X10 DIN7991
   1PC 33383_NAVIX_LINE_MSU_FUSE_HOLDER

7. 1PC VMI30914 COUNTERSUNK HEAD SCREW HEX SOCKET M4X10 DIN7991
 - ZIPTIE AND -HOLDER (AS IN DIAGRAM) -

8. 2PCS VMI30944 HEX SOCKET HEAD CAP SCREW M4X12 DIN912
   2PCS VMI30904 SPRING LOCK WASHER M4 DIN127
   2PCS VMI30906 FLAT WASHER FOR HEX BOLTS AND NUTS M4 DIN125A

9. 1PC VMI32012 HEX NUT M8 DIN934
   1PC VMI32011 SPRING LOCK WASHER M8 DIN127
   1PC VMI32013 FLAT WASHER FOR HEX BOLT
 - FUSE & HOLDER (AS IN DIAGRAM) -
   1PC VMI30917 COUNTERSUNK HEAD SCREW HEX SOCKET M4X16 DIN7991
   1PC VMI30918 COUNTERSUNK HEAD SCREW HEX SOCKET M4X20 DIN7991
   1PC 36825_NAVIX_LINE_CUBE_FUSE_HOLDER_BASE_V1
   1PC 36826_NAVIX_LINE_CUBE_FUSE_HOLDER_BOTTOM_V1

10. 1PC 36821_AXOPAR_45_MSU_ENGINE_START_COVER_V1
 + LABELS (AS IN DIAGRAM)

11. 1PC 36822_AXOPAR_45_MSU_ENGINE_START_BASE_V1

12. 1PC 36823_AXOPAR_45_MSU_ENGINE_START_BACK_V1

14.6.2022	TuM	A1: 2003713; INTRODUCED DRAWING.	Date 14.6.2022	NAVIX	Axopar	SEE EXP VIEW	36411	
3.5.2023	RK	B1: 2004274; NOT MODIFIED.	Drawing by TuM		Boat	Sub-product code	Product code	Project ID
4.12.2023	PF	C2: 2004890; V8 fuses moved to product 40364	Sheet rev. 2		45	MSU ENGINE START - PORT	HL	168 / 444
Date of modification	Modified by	Description	Project rev. C	Copyright by	Boat model	Title	Loc	Sheet

EXP VIEW

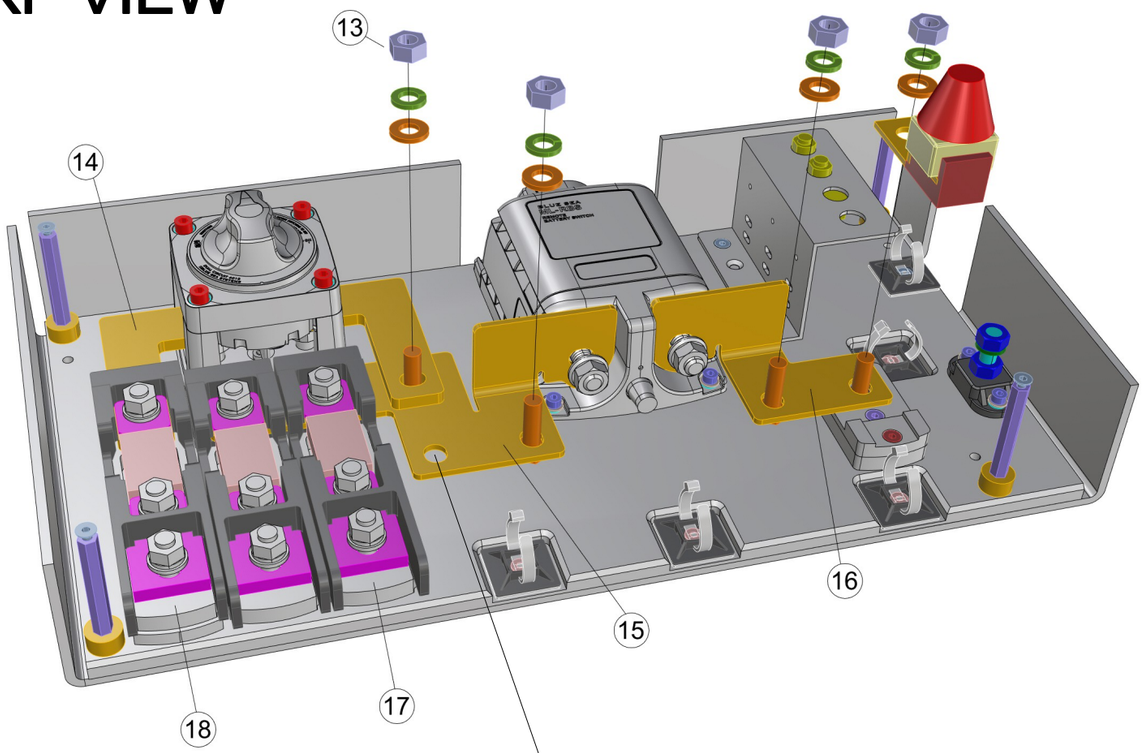

13. 4PCS VMI32012 HEX NUT M8 DIN934
    4PCS VMI32011 SPRING LOCK WASHER M8 DIN127
    4PCS VMI32013 FLAT WASHER FOR HEX BOLT M8
    4PCS VMI32018 HEX BOLT FULL THREAD M8X25 DIN933

14. 2PCS 36927_NAVIX_LINE_BUS_BAR_ANGLE_V1

15. 1PC 36929_NAVIX_LINE_BUS_BAR_TYPE3C_LEFT_5X_V1

16. 1PC 36928_NAVIX_LINE_BUS_BAR_TYPE3_RIGHT_2X_V1

17. 2PC 90000_NAVIX_LINE_ANL_HOLDER_TYPE3_V1

18. 1PC 90001_NAVIX_LINE_ANL_HOLDER_TYPE5_V1

1.6.2022 / TS

ASSEMBLED PANEL

(WITHOUT WIRING)

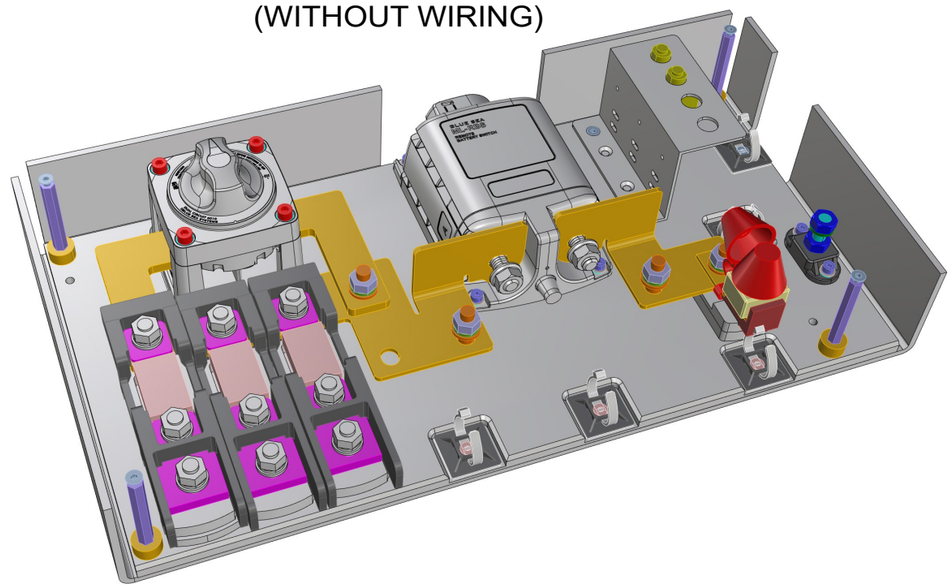

Date of modification	Modified by	Description
14.6.2022	TuM	A1: 2003713; INTRODUCED DRAWING.
3.5.2023	RK	B1: 2004274; NOT MODIFIED.
4.12.2023	PF	C2: 2004890; V8 fuses moved to product 40364

Date	14.6.2022
Drawing by	TuM
Sheet rev.	2
Project rev.	C

Copyright by

Axopar Boat	SEE EXP VIEW Sub-product code	36411 Product code	Project ID	
45 Boat model	MSU ENGINE START - PORT Title	HL Loc	169 / 444 Sheet	

GENERAL LAYOUT & LABELS
WIRE ROUTES / CABLE TIES

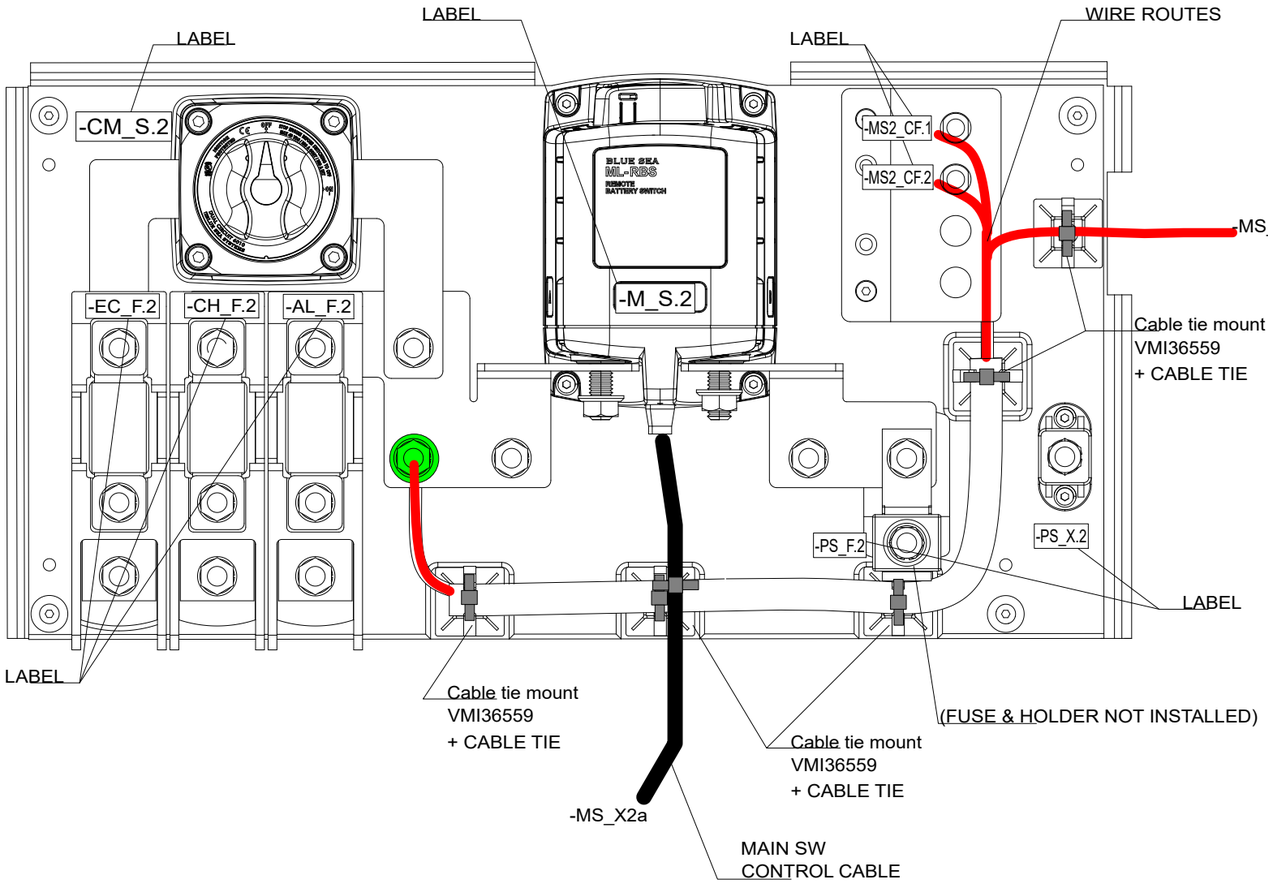

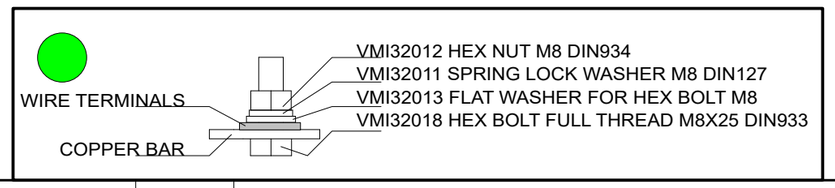

COVER LABEL INSTALLATION

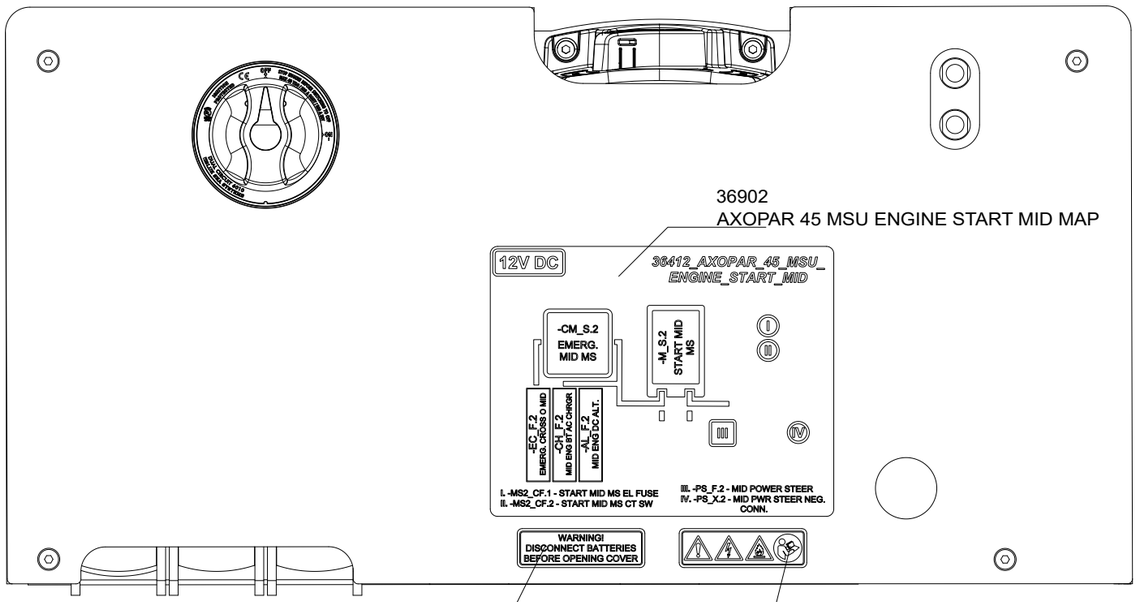

27.6.2022	TuM	A1: 2003713; INTRODUCED DRAWING.	Date	27.6.2022	NAVIX	Axopar	SEE EXP VIEW	36412	
3.5.2023	RK	B1: 2004274; NOT MODIFIED.	Drawing by	TuM		Boat	Sub-product code	Product code	Project ID
4.12.2023	PF	C2: 2004890; V8 fuses moved to product 40364	Sheet rev.	2		45	MSU ENGINE START - MID	HL	170 / 444
Date of modification	Modified by	Description	Project rev.	C	Copyright by	Boat model	Title	Loc	Sheet

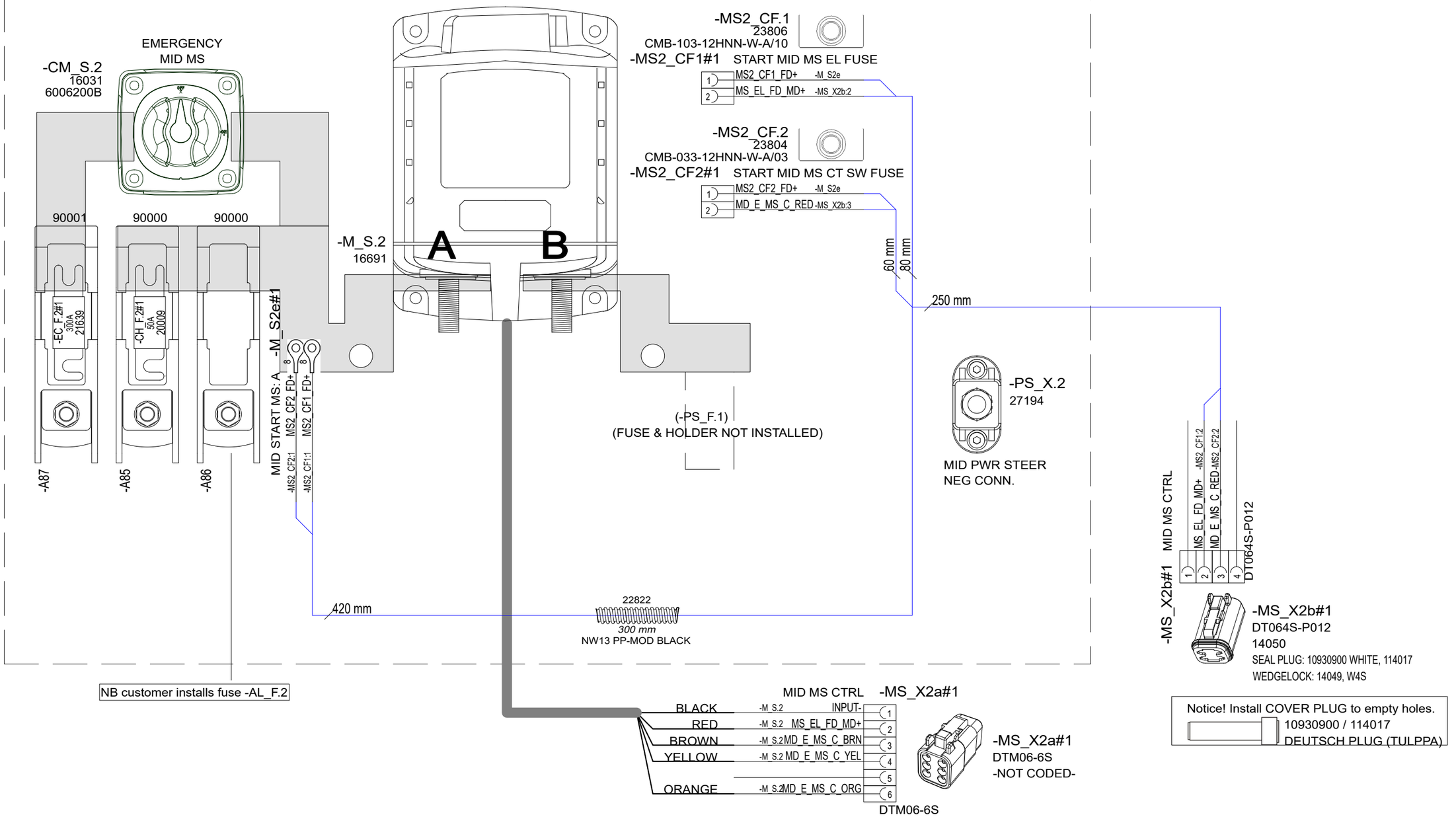

27.6.2022	TuM	A1: 2003713; INTRODUCED DRAWING.	Date	27.6.2022	NAVIX	Axopar	SEE EXP VIEW	36412	
3.5.2023	RK	B1: 2004274; NOT MODIFIED.	Drawing by	TuM		Boat	Sub-product code	Product code	Project ID
4.12.2023	PF	C2: 2004890; V8 fuses moved to product 40364	Sheet rev.	2		45	MSU ENGINE START - MID	HL	171/ 444
Date of modification	Modified by	Description	Project rev.	C	Copyright by	Boat model	Title	Loc	Sheet

EXP VIEW

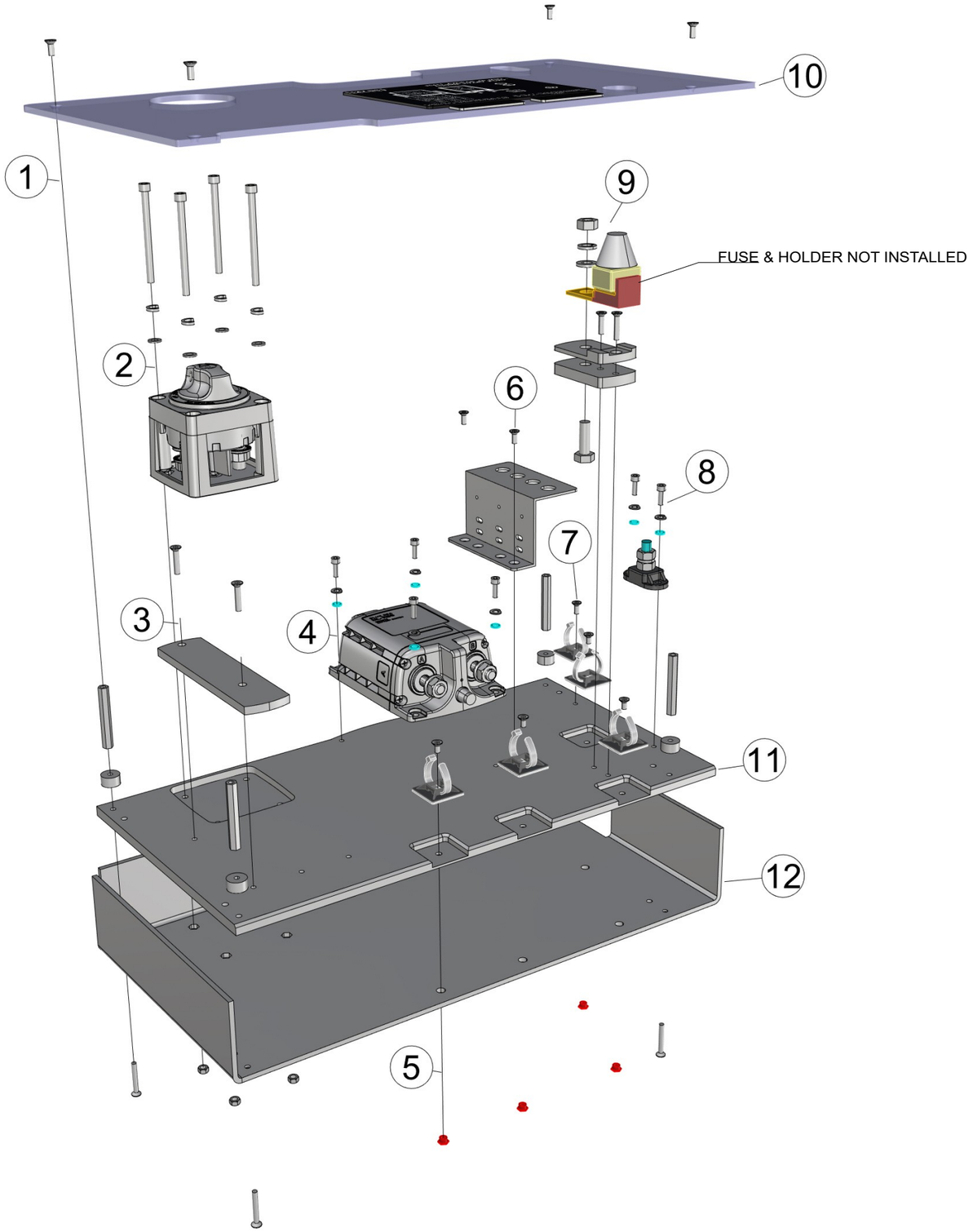

36412_AXOPAR_45_MSU_ENGINE_START

1. 4PCS VMI30914 COUNTERSUNK HEAD SCREW HEX SOCKET M4X10 DIN7991
   4PCS VMI32041 EXTENSION BOLT M4 L-50
   4PCS 29063_NAVIX_LINE_8MM_WASHER_V1
   4PCS VMI30920 COUNTERSUNK HEAD SCREW HEX SOCKET M4X30 DIN7991

2. 4PCS VMI35428 HEX SOCKET HEAD CAP SCREW M5X65 DIN912
   4PCS VMI31540 SPRING LOCK WASHER M5 DIN127
   4PCS VMI31541 FLAT WASHER FOR HEX BOLTS AND NUTS M5 DIN125A
   - MAIN SWITCH (AS IN DIAGRAM) -
   4PCS VMI31538 HEX NUT M5 DIN934

3. 2PCS VMI30918 COUNTERSUNK HEAD SCREW HEX SOCKET M4X20 DIN7991
 (USE WITH ANL-HOLDER INSTEAD OF REGULAR ONES!)
   1PC 36824_NAVIX_LINE_ANL_HOLDER_TYPE_SERIES_RAISER_V1
 (PLACE UNDER ANL-HOLDER)

4. 4PCS VMI30944 HEX SOCKET HEAD CAP SCREW M4X12 DIN912
   4PCS VMI30904 SPRING LOCK WASHER M4 DIN127
   4PCS VMI30906 FLAT WASHER FOR HEX BOLTS AND NUTS M4 DIN125A
 - MAIN SWITCH (AS IN DIAGRAM) -

5. 4PCS VMI30913 COUNTERSUNK HEAD SCREW HEX SOCKET M4X8 DIN7991
   - ZIPTIE AND -HOLDER (AS IN DIAGRAM) -
   4PCS 9872 ETSOS M4X4

6. 2PCS VMI30914 COUNTERSUNK HEAD SCREW HEX SOCKET M4X10 DIN7991
   1PC 33383_NAVIX_LINE_MSU_FUSE_HOLDER

7. 1PC VMI30914 COUNTERSUNK HEAD SCREW HEX SOCKET M4X10 DIN7991
 - ZIPTIE AND -HOLDER (AS IN DIAGRAM) -

8. 2PCS VMI30944 HEX SOCKET HEAD CAP SCREW M4X12 DIN912
   2PCS VMI30904 SPRING LOCK WASHER M4 DIN127
   2PCS VMI30906 FLAT WASHER FOR HEX BOLTS AND NUTS M4 DIN125A

9. 1PC VMI32012 HEX NUT M8 DIN934
   1PC VMI32011 SPRING LOCK WASHER M8 DIN127
   1PC VMI32013 FLAT WASHER FOR HEX BOLT
 - FUSE & HOLDER (AS IN DIAGRAM) -
   1PC VMI30917 COUNTERSUNK HEAD SCREW HEX SOCKET M4X16 DIN7991
   1PC VMI30918 COUNTERSUNK HEAD SCREW HEX SOCKET M4X20 DIN7991
   1PC 36825_NAVIX_LINE_CUBE_FUSE_HOLDER_BASE_V1
   1PC 36826_NAVIX_LINE_CUBE_FUSE_HOLDER_BOTTOM_V1

10. 1PC 36821_AXOPAR_45_MSU_ENGINE_START_COVER_V1
 + LABELS (AS IN DIAGRAM)

11. 1PC 36822_AXOPAR_45_MSU_ENGINE_START_BASE_V1

12. 1PC 36823_AXOPAR_45_MSU_ENGINE_START_BACK_V1

27.6.2022	TuM	A1: 2003713; INTRODUCED DRAWING.	Date 27.6.2022	NAVIX	Axopar	SEE EXP VIEW	36412	
3.5.2023	RK	B1: 2004274; NOT MODIFIED.	Drawing by TuM		Boat	Sub-product code	Product code	Project ID
4.12.2023	PF	C2: 2004890; V8 fuses moved to product 40364	Sheet rev. 2		45	MSU ENGINE START - MID	HL	172 / 444
Date of modification	Modified by	Description	Project rev. C	Copyright by	Boat model	Title	Loc	Sheet

EXP VIEW

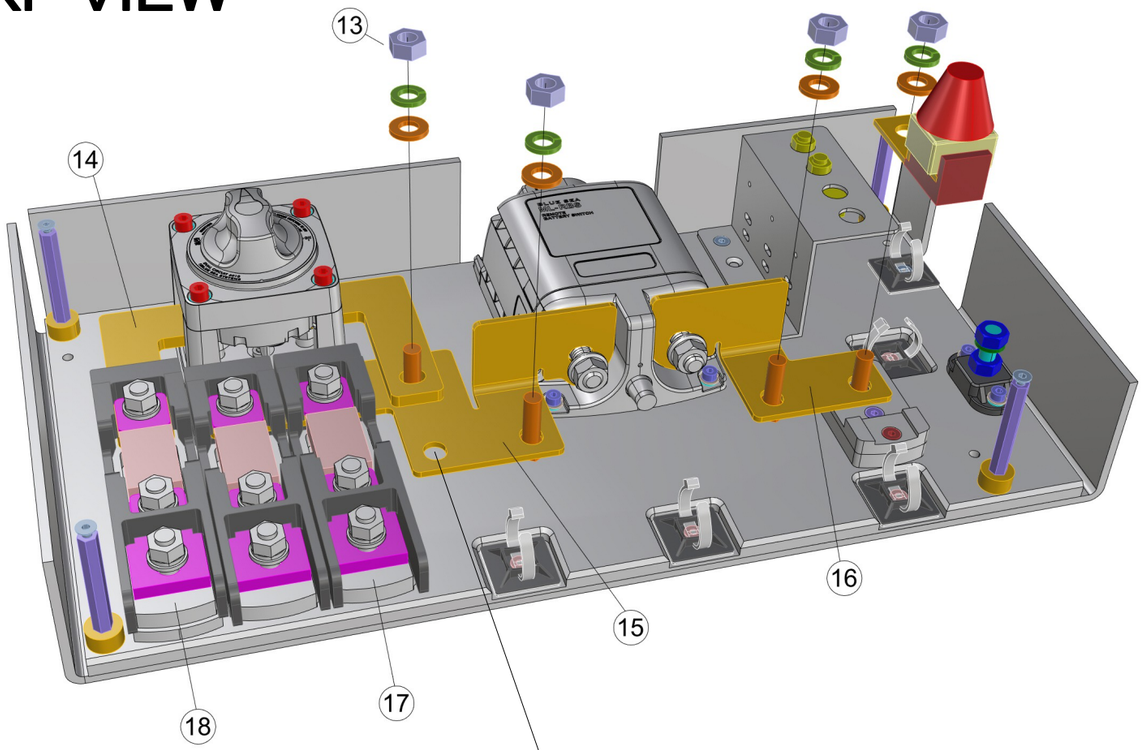

13. 4PCS VMI32012 HEX NUT M8 DIN934
    4PCS VMI32011 SPRING LOCK WASHER M8 DIN127
    4PCS VMI32013 FLAT WASHER FOR HEX BOLT M8
    4PCS VMI32018 HEX BOLT FULL THREAD M8X25 DIN933

14. 2PCS 36927_NAVIX_LINE_BUS_BAR_ANGLE_V1

15. 1PC 36929_NAVIX_LINE_BUS_BAR_TYPE3C_LEFT_5X_V1

16. 1PC 36928_NAVIX_LINE_BUS_BAR_TYPE3_RIGHT_2X_V1

17. 2PC 90000_NAVIX_LINE_ANL_HOLDER_TYPE3_V1

18. 1PC 90001_NAVIX_LINE_ANL_HOLDER_TYPE5_V1

1.6.2022 / TS

ASSEMBLED PANEL

(WITHOUT WIRING)

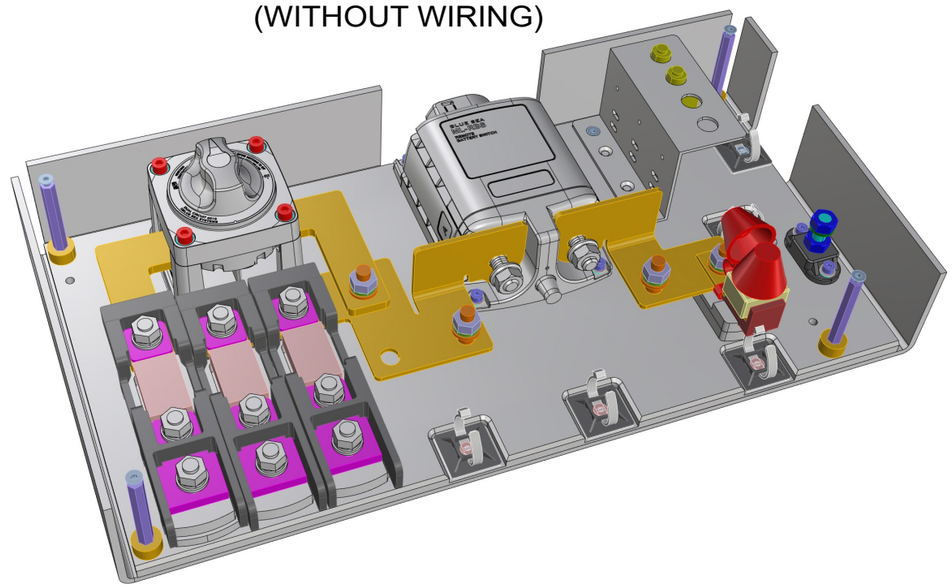

Date of modification	Modified by	Description
27.6.2022	TuM	A1: 2003713; INTRODUCED DRAWING.
3.5.2023	RK	B1: 2004274; NOT MODIFIED.
4.12.2023	PF	C2: 2004890; V8 fuses moved to product 40364

Date	27.6.2022
Drawing by	TuM
Sheet rev.	2
Project rev.	C

Copyright by

Axopar Boat	SEE EXP VIEW Sub-product code	36412 Product code	Project ID	
45 Boat model	MSU ENGINE START - MID Title	HL Loc	173 / 444 Sheet	

GENERAL LAYOUT & LABELS
WIRE ROUTES / CABLE TIES

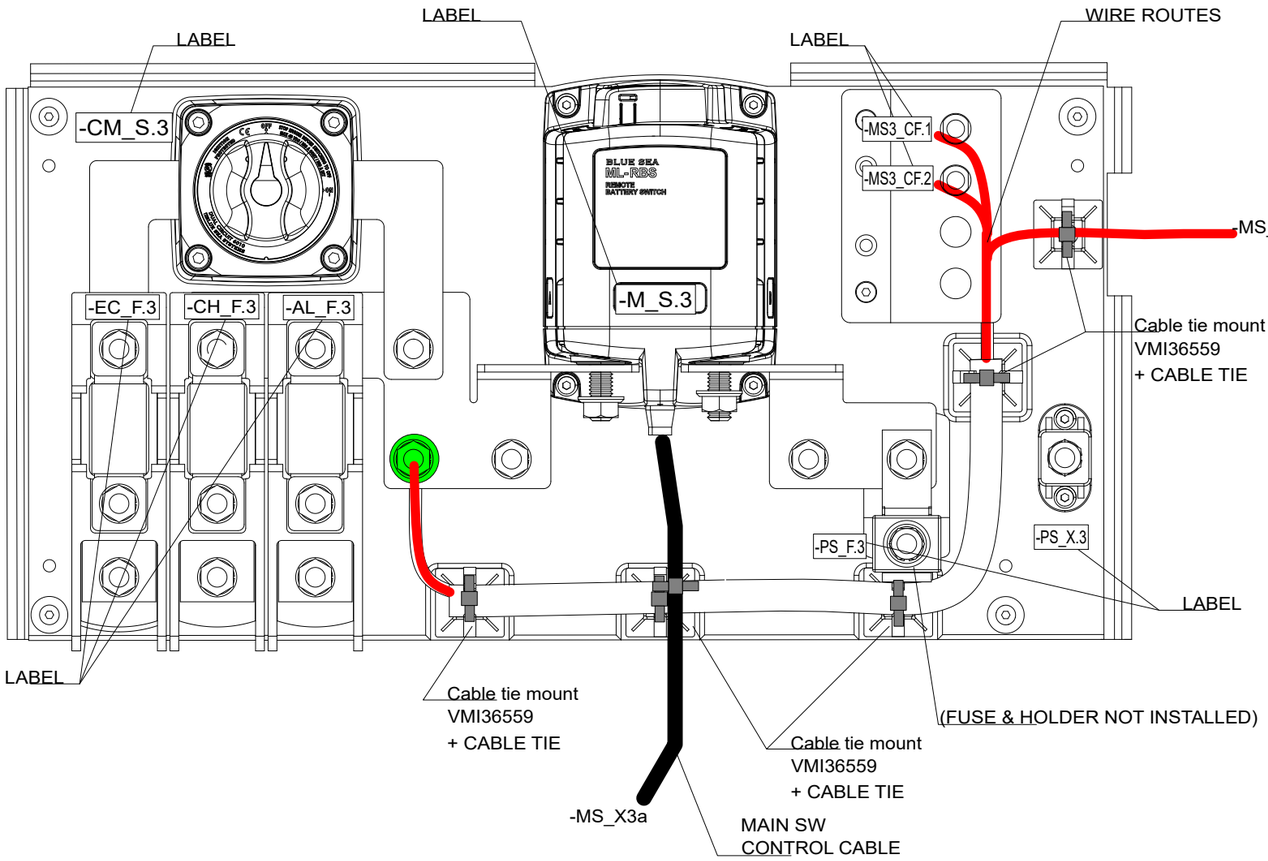

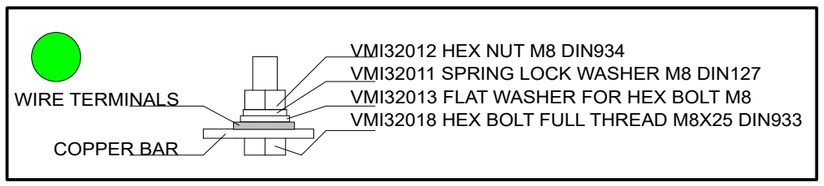

COVER LABEL INSTALLATION

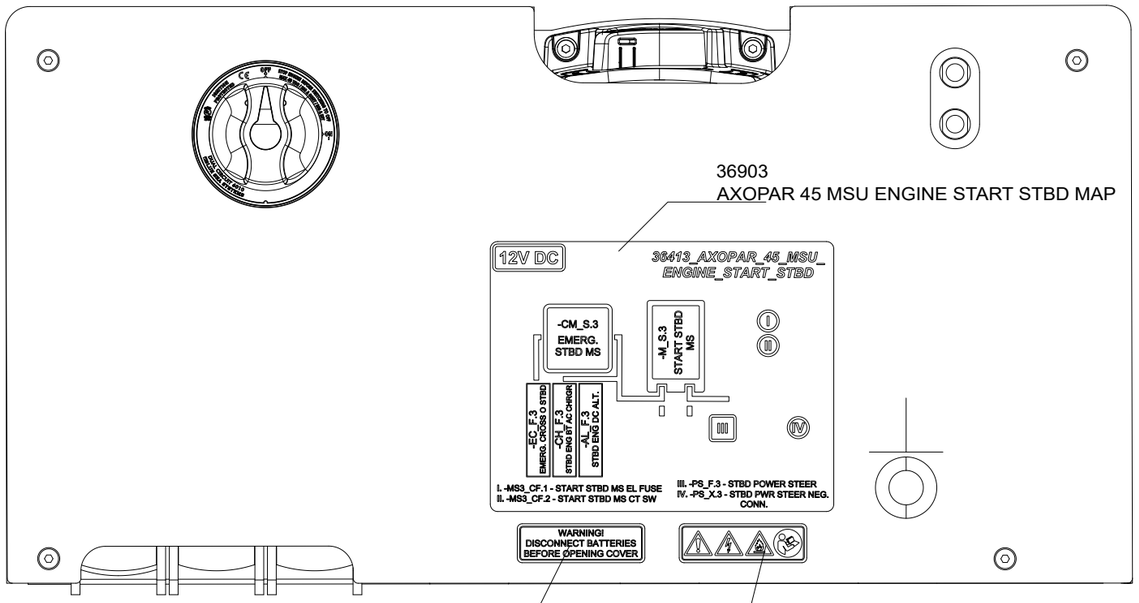

36873
NAVIX LINE WARNING LABEL FOR COVER

36874
NAVIX LINE WARNING LABEL SYMBOLS

27.6.2022	TuM	A1: 2003713; INTRODUCED DRAWING.	Date	27.6.2022	NAVIX	Axopar	SEE EXP VIEW	36413	
3.5.2023	RK	B1: 2004274; NOT MODIFIED.	Drawing by	TuM		Boat	Sub-product code	Product code	Project ID
4.12.2023	PF	C2: 2004890; V8 fuses moved to product 40364	Sheet rev.	2		45	MSU ENGINE START - STBD	HL	174 / 444
Date of modification	Modified by	Description	Project rev.	C	Copyright by	Boat model	Title	Loc	Sheet

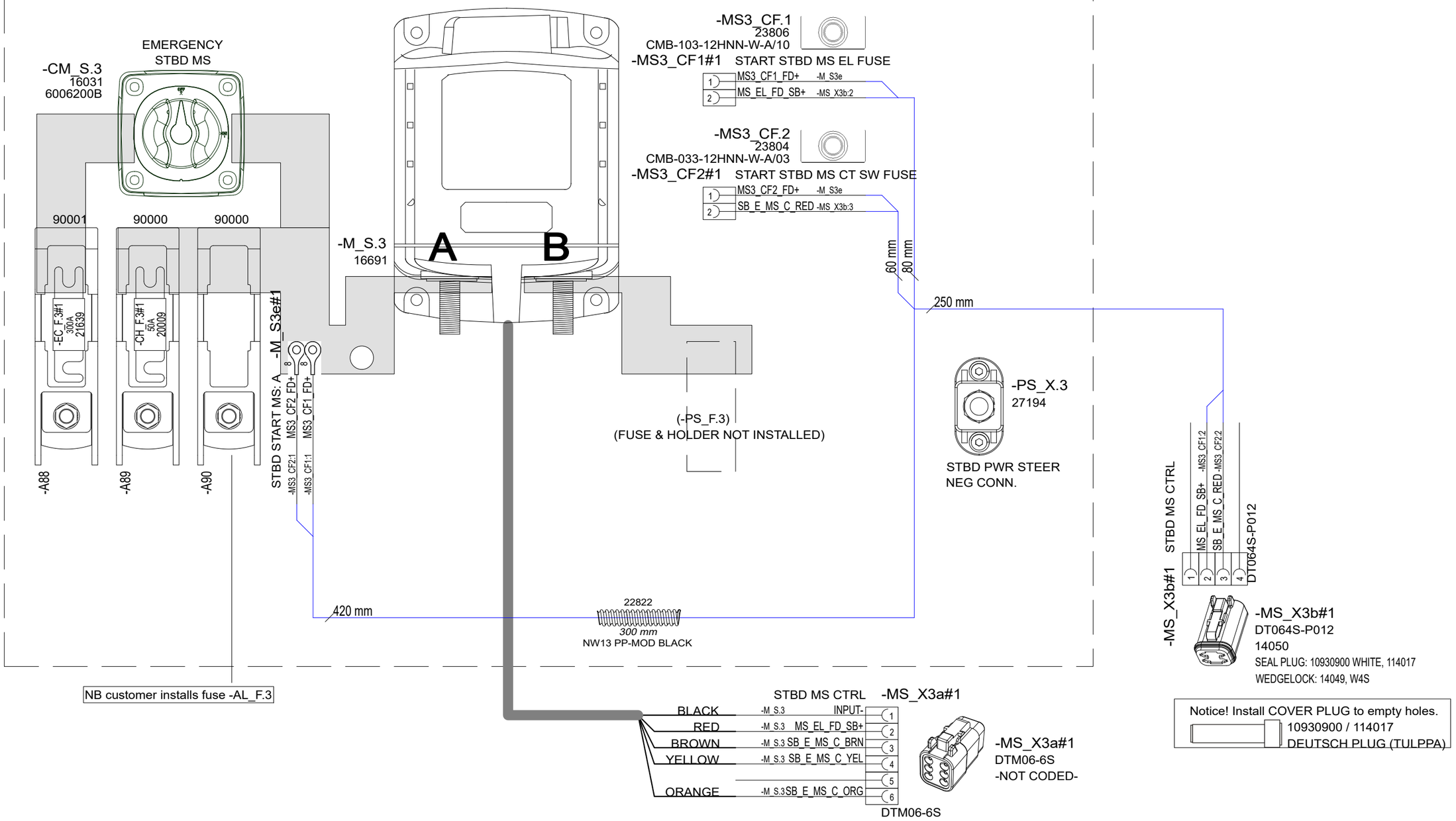

Date of modification	Modified by	Description						
27.6.2022	TuM	A1: 2003713; INTRODUCED DRAWING.	Date	27.6.2022	NAVIX	Axopar	SEE EXP VIEW	36413	
3.5.2023	RK	B1: 2004274; NOT MODIFIED.	Drawing by	TuM		Boat	Sub-product code	Product code	Project ID
4.12.2023	PF	C2: 2004890; V8 fuses moved to product 40364	Sheet rev.	2		45	MSU ENGINE START - STBD	HL	175 / 444
			Project rev.	C	Copyright by	Boat model	Title	Loc	Sheet

EXP VIEW

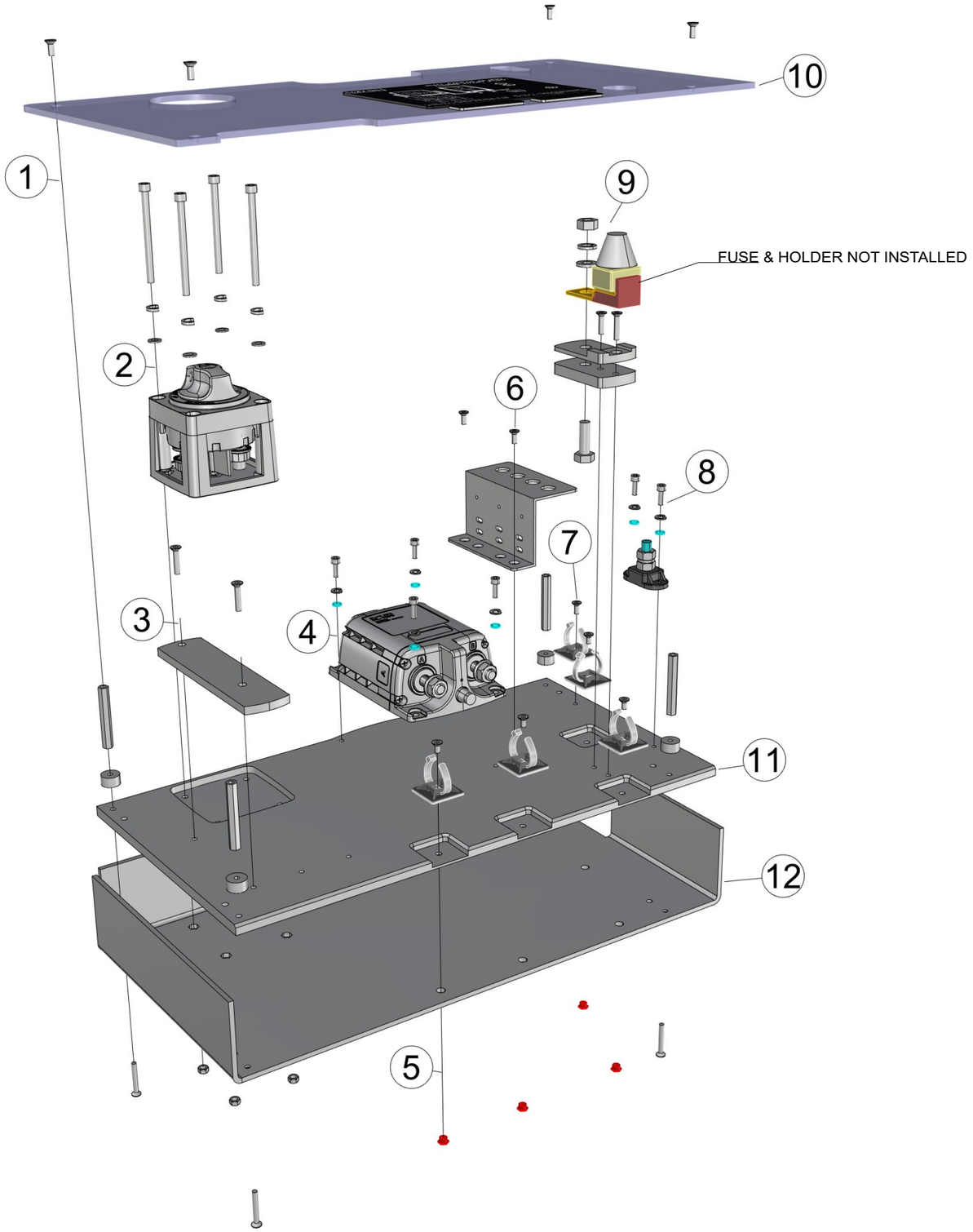

36413_AXOPAR_45_MSU_ENGINE_START

1. 4PCS VMI30914 COUNTERSUNK HEAD SCREW HEX SOCKET M4X10 DIN7991
   4PCS VMI32041 EXTENSION BOLT M4 L-50
   4PCS 29063_NAVIX_LINE_8MM_WASHER_V1
   4PCS VMI30920 COUNTERSUNK HEAD SCREW HEX SOCKET M4X30 DIN7991

2. 4PCS VMI35428 HEX SOCKET HEAD CAP SCREW M5X65 DIN912
   4PCS VMI31540 SPRING LOCK WASHER M5 DIN127
   4PCS VMI31541 FLAT WASHER FOR HEX BOLTS AND NUTS M5 DIN125A
   - MAIN SWITCH (AS IN DIAGRAM) -
   4PCS VMI31538 HEX NUT M5 DIN934

3. 2PCS VMI30918 COUNTERSUNK HEAD SCREW HEX SOCKET M4X20 DIN7991
 (USE WITH ANL-HOLDER INSTEAD OF REGULAR ONES!)
   1PC 36824_NAVIX_LINE_ANL_HOLDER_TYPE_SERIES_RAISER_V1
 (PLACE UNDER ANL-HOLDER)

4. 4PCS VMI30944 HEX SOCKET HEAD CAP SCREW M4X12 DIN912
   4PCS VMI30904 SPRING LOCK WASHER M4 DIN127
   4PCS VMI30906 FLAT WASHER FOR HEX BOLTS AND NUTS M4 DIN125A
 - MAIN SWITCH (AS IN DIAGRAM) -

5. 4PCS VMI30913 COUNTERSUNK HEAD SCREW HEX SOCKET M4X8 DIN7991
   - ZIPTIE AND -HOLDER (AS IN DIAGRAM) -
   4PCS 9872 ETSOS M4X4

6. 2PCS VMI30914 COUNTERSUNK HEAD SCREW HEX SOCKET M4X10 DIN7991
   1PC 33383_NAVIX_LINE_MSU_FUSE_HOLDER

7. 1PC VMI30914 COUNTERSUNK HEAD SCREW HEX SOCKET M4X10 DIN7991
 - ZIPTIE AND -HOLDER (AS IN DIAGRAM) -

8. 2PCS VMI30944 HEX SOCKET HEAD CAP SCREW M4X12 DIN912
   2PCS VMI30904 SPRING LOCK WASHER M4 DIN127
   2PCS VMI30906 FLAT WASHER FOR HEX BOLTS AND NUTS M4 DIN125A

9. 1PC VMI32012 HEX NUT M8 DIN934
   1PC VMI32011 SPRING LOCK WASHER M8 DIN127
   1PC VMI32013 FLAT WASHER FOR HEX BOLT
 - FUSE & HOLDER (AS IN DIAGRAM) -
   1PC VMI30917 COUNTERSUNK HEAD SCREW HEX SOCKET M4X16 DIN7991
   1PC VMI30918 COUNTERSUNK HEAD SCREW HEX SOCKET M4X20 DIN7991
   1PC 36825_NAVIX_LINE_CUBE_FUSE_HOLDER_BASE_V1
   1PC 36826_NAVIX_LINE_CUBE_FUSE_HOLDER_BOTTOM_V1

10. 1PC 36821_AXOPAR_45_MSU_ENGINE_START_COVER_V1
 + LABELS (AS IN DIAGRAM)

11. 1PC 36822_AXOPAR_45_MSU_ENGINE_START_BASE_V1

12. 1PC 36823_AXOPAR_45_MSU_ENGINE_START_BACK_V1

Date of modification	Modified by	Description
27.6.2022	TuM	A1: 2003713; INTRODUCED DRAWING.
3.5.2023	RK	B1: 2004274; NOT MODIFIED.
4.12.2023	PF	C2: 2004890; V8 fuses moved to product 40364

Date	27.6.2022
Drawing by	TuM
Sheet rev.	2
Project rev.	C

Copyright by NAVIX

Axopar Boat	SEE EXP VIEW Sub-product code	36413 Product code	Project ID	
45 Boat model	MSU ENGINE START - STBD Title	HL Loc	176 / 444 Sheet	

EXP VIEW

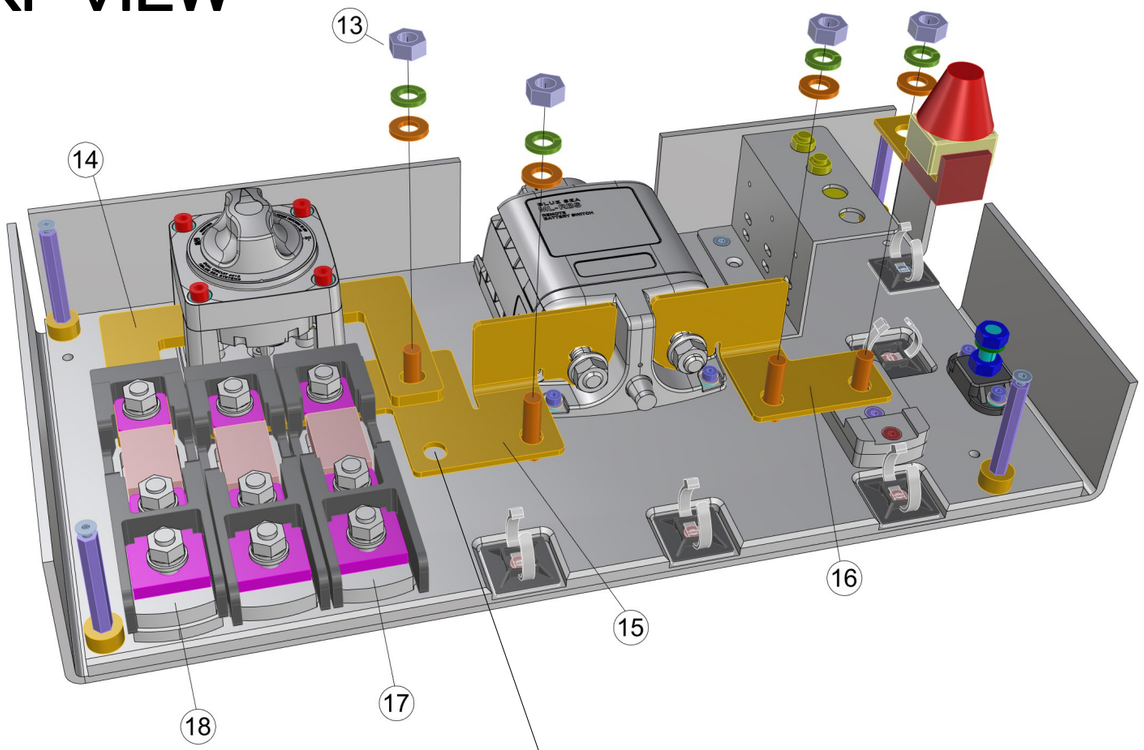

13. 4PCS VMI32012 HEX NUT M8 DIN934
    4PCS VMI32011 SPRING LOCK WASHER M8 DIN127
    4PCS VMI32013 FLAT WASHER FOR HEX BOLT M8
    4PCS VMI32018 HEX BOLT FULL THREAD M8X25 DIN933

14. 2PCS 36927_NAVIX_LINE_BUS_BAR_ANGLE_V1

15. 1PC 36929_NAVIX_LINE_BUS_BAR_TYPE3C_LEFT_5X_V1

16. 1PC 36928_NAVIX_LINE_BUS_BAR_TYPE3_RIGHT_2X_V1

17. 2PC 90000_NAVIX_LINE_ANL_HOLDER_TYPE3_V1

18. 1PC 90001_NAVIX_LINE_ANL_HOLDER_TYPE5_V1

1.6.2022 / TS

ASSEMBLED PANEL

(WITHOUT WIRING)

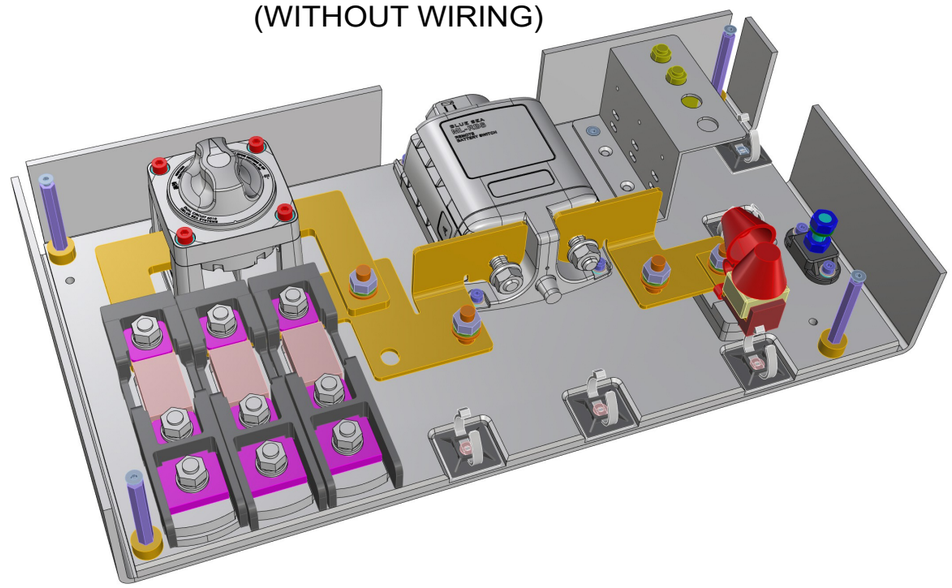

Date of modification	Modified by	Description						
27.6.2022	TuM	A1: 2003713; INTRODUCED DRAWING.	Date	27.6.2022	Axopar	SEE EXP VIEW	36413	
3.5.2023	RK	B1: 2004274; NOT MODIFIED.	Drawing by	TuM	Boat	Sub-product code	Product code	Project ID
4.12.2023	PF	C2: 2004890; V8 fuses moved to product 40364	Sheet rev.	2	45	MSU ENGINE START - STBD	HL	177 / 444
			Project rev.	C	Boat model	Title	Loc	Sheet

NAVIX
Copyright by

GENERAL LAYOUT/ LABEL INSTALLATION/ LED STRIP INSTALLATION

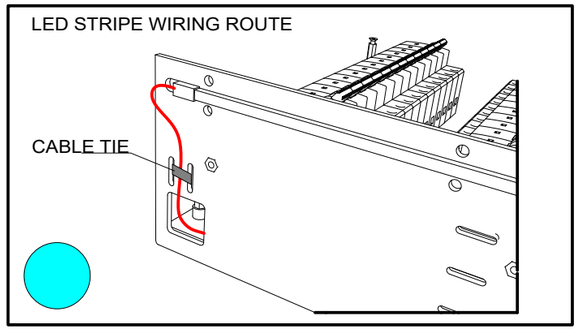

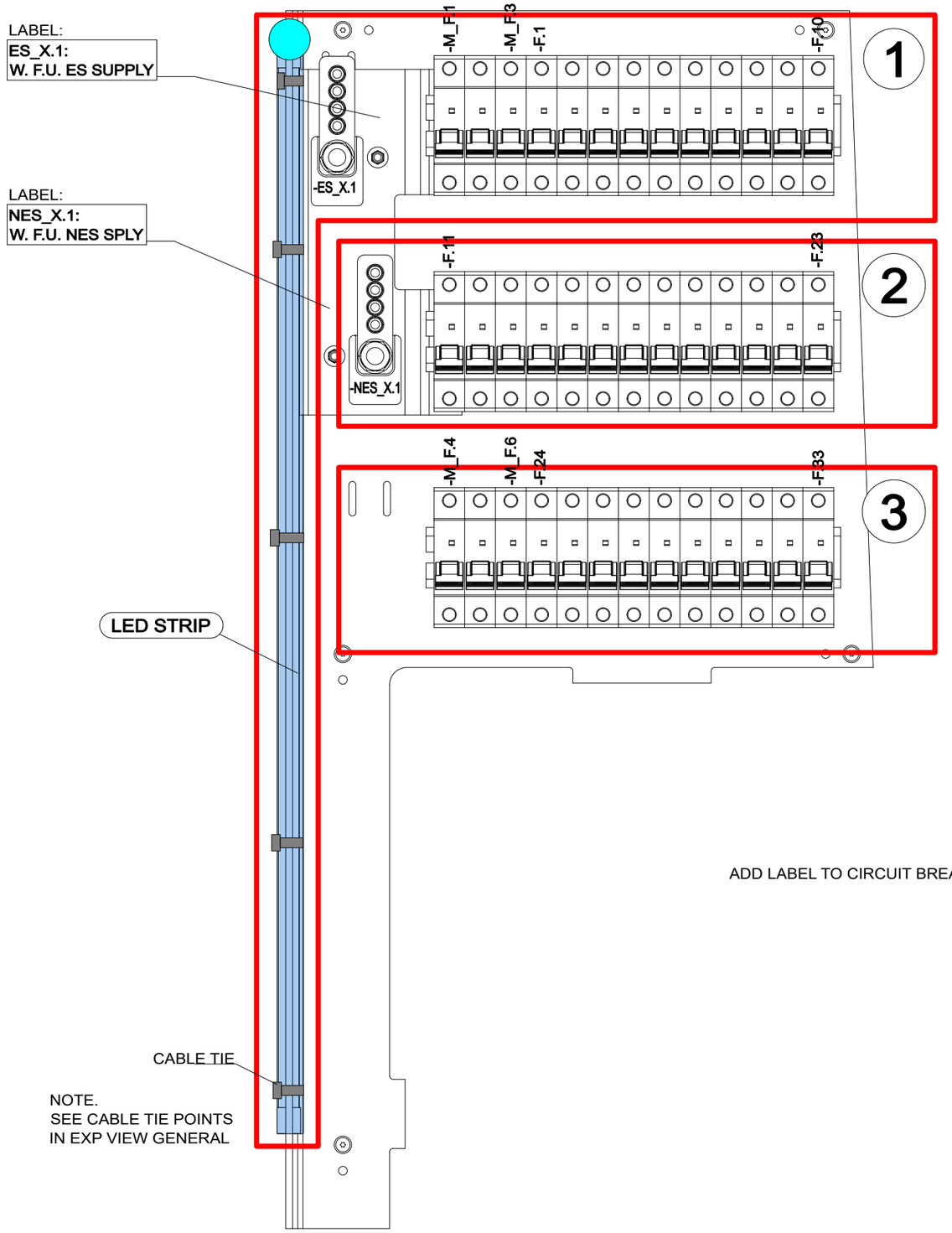

NOTICE!
VERIFY THAT ALL CABLES HAVE MARKINGS
SHOWN IN EXAMPLE BELOW.

EXEMPTION:
ALL <500mm WIRES AND BLACK WIRES
THIS MARKING IS NOT NEEDED.

MARKING

R2 ISO 6722 100V AWG16 +100 C

CABLE

EXAMPLE: RED 1,5mm2 WIRE MARKINGS.

Date of modification	Modified by	Description
14.2.2022	TuM	A1: 2003713; INTRODUCED DRAWING.
4.5.2023	VR	B2: 2004274: ADDED CONNECTORS
7.11.2023	PF	C3: 2004890; -ES_X.1 instruction

Date	14.2.2022
Drawing by	TuM
Sheet rev.	3
Project rev.	C

Copyright by

NAVIX

Axopar Boat	SEE EXP VIEW Sub-product code	36414 Product code	Project ID		
45 Boat model	WARDROBE DC FUSE PANEL Title	HL Loc	178 / 444 Sheet		

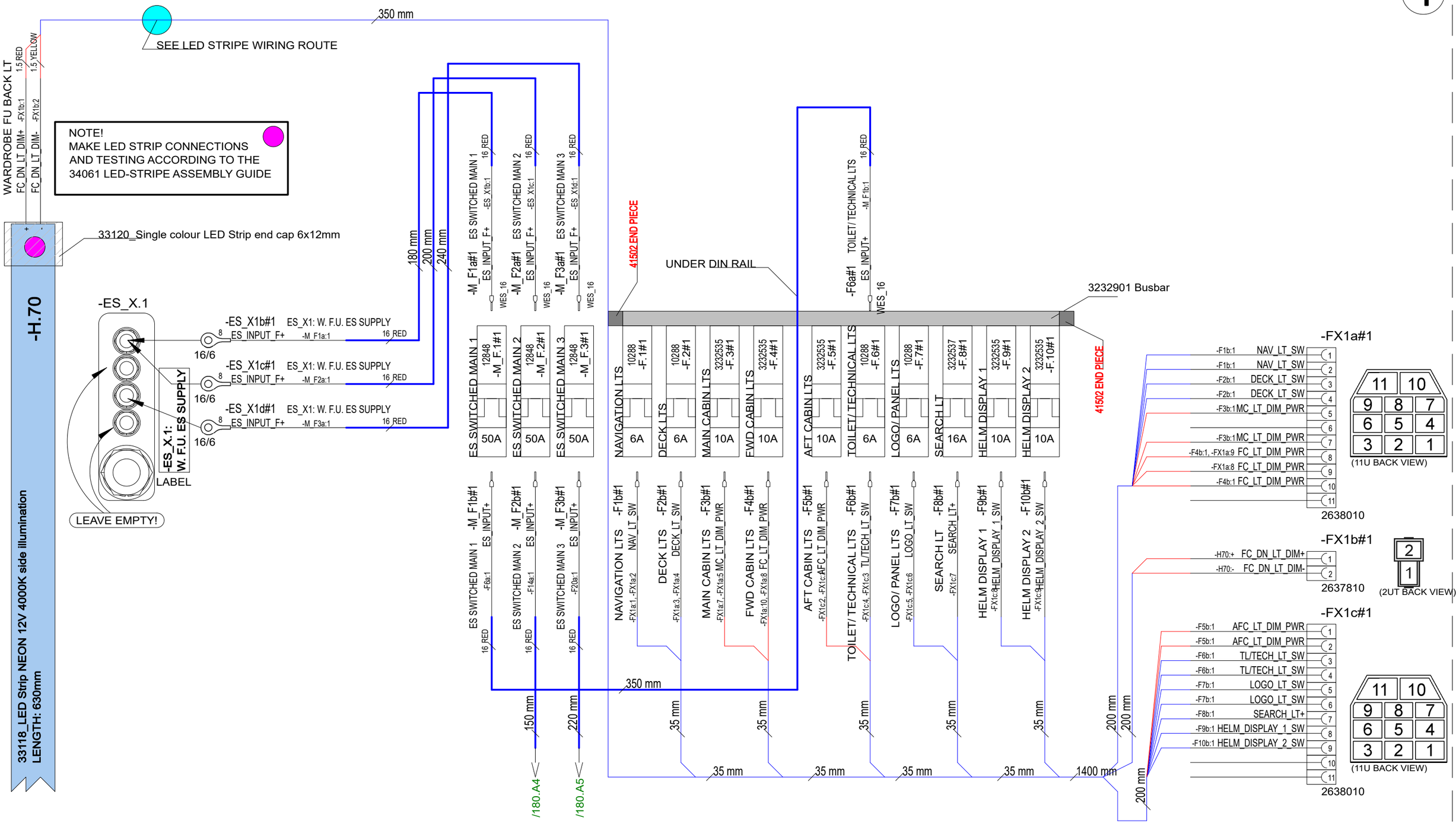

14.2.2022	TuM	A1: 2003713; INTRODUCED DRAWING.	Date 14.2.2022	NAVIX	Axopar	SEE EXP VIEW	36414	
4.5.2023	VR	B2: 2004274: ADDED CONNECTORS	Drawing by TuM		Boat	Sub-product code	Product code	Project ID
7.11.2023	PF	C3: 2004890; -ES_X.1 instruction	Sheet rev. 3		45	WARDROBE DC FUSE PANEL	HL	179 / 444
Date of modification	Modified by	Description	Project rev. C	Copyright by	Boat model	Title	Loc	Sheet

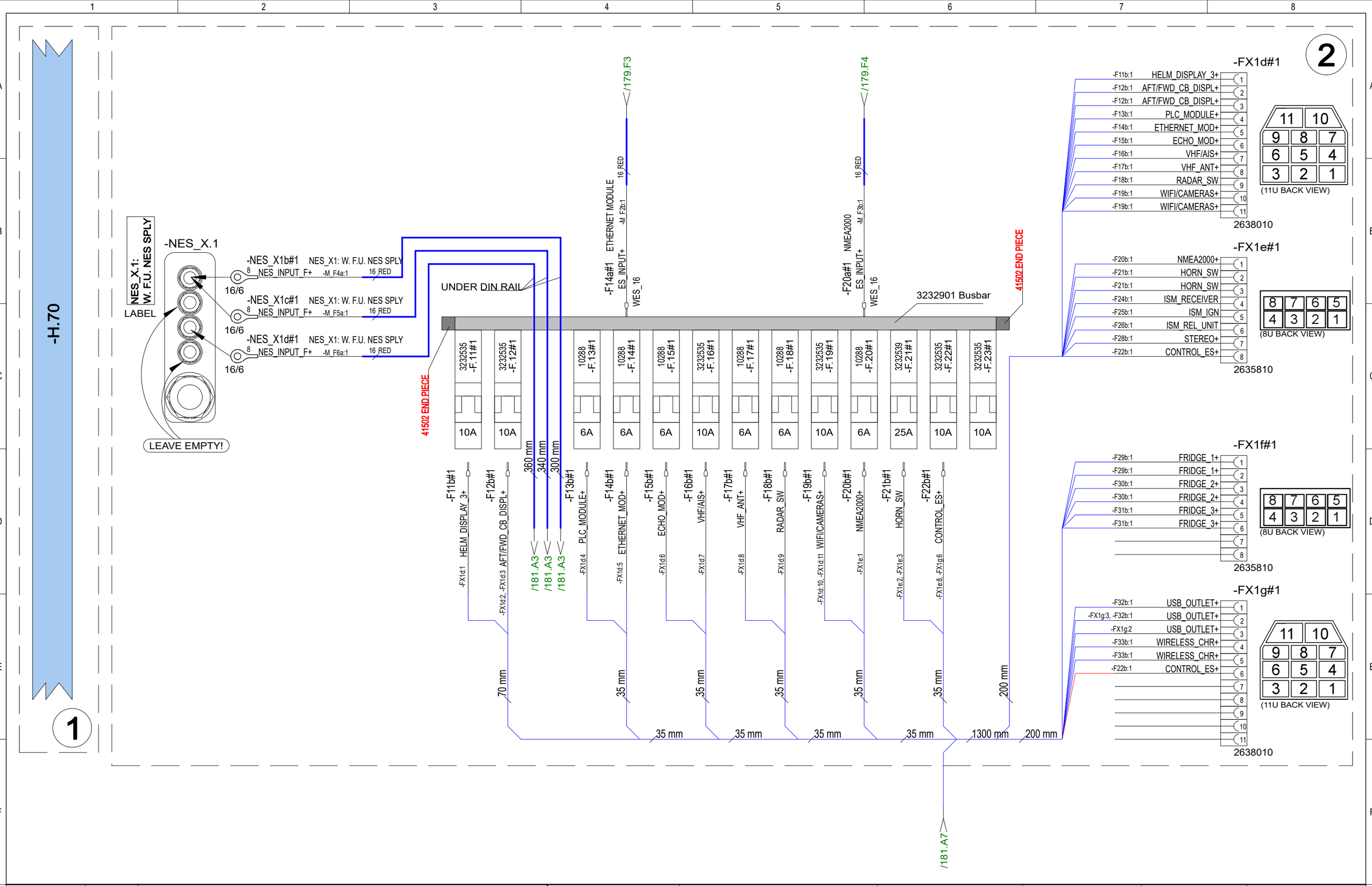

14.2.2022	TuM	A1: 2003713; INTRODUCED DRAWING.	Date 14.2.2022	NAVIX	Axopar	SEE EXP VIEW	36414	
4.5.2023	VR	B2: 2004274: ADDED CONNECTORS	Drawing by TuM		Boat	Sub-product code	Product code	Project ID
7.11.2023	PF	C3: 2004890; -ES_X.1/-NES_X.1 instruction	Sheet rev. 3		45	WARDROBE DC FUSE PANEL	HL	180 / 444
Date of modification	Modified by	Description	Project rev. C	Copyright by	Boat model	Title	Loc	Sheet

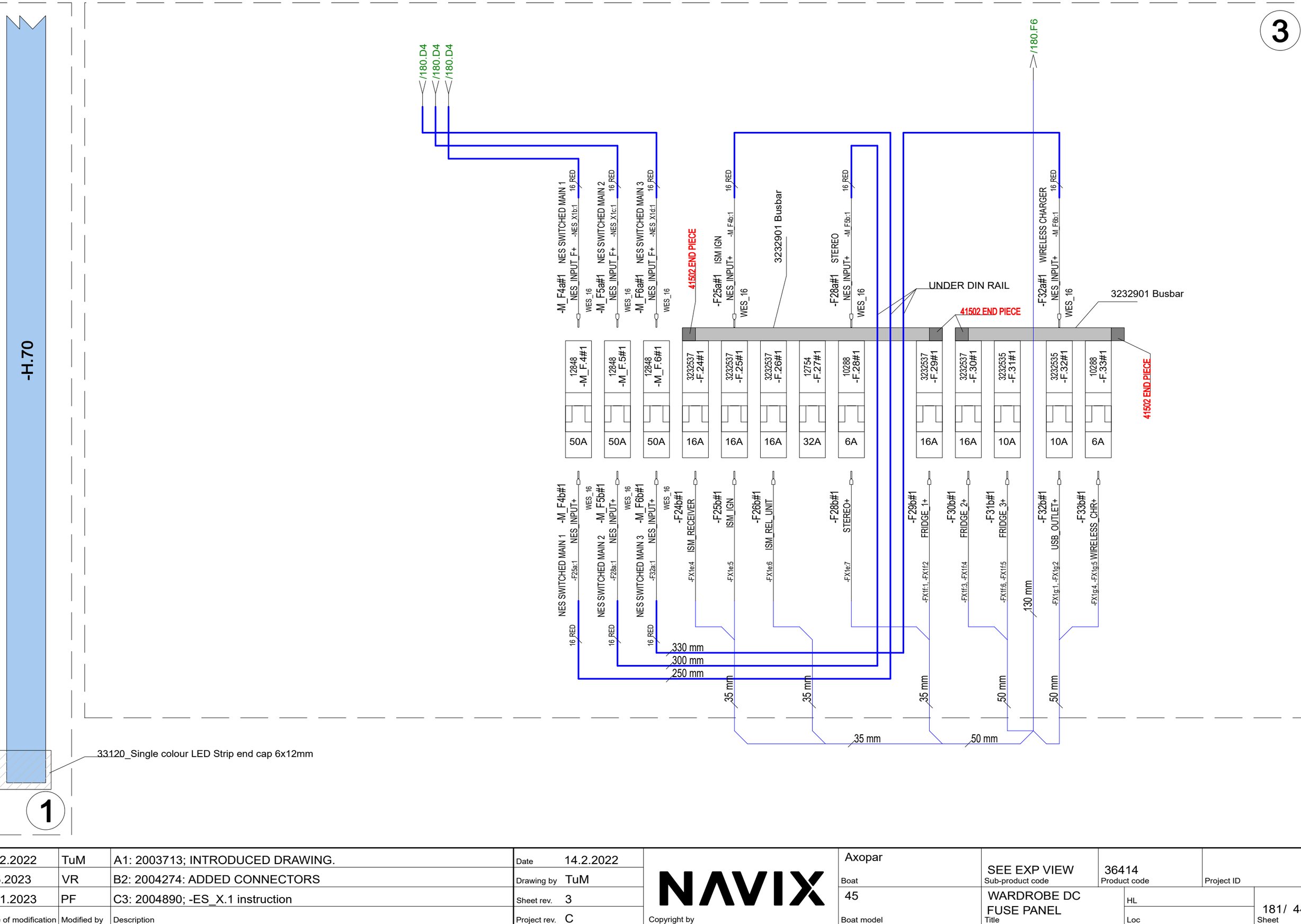

Date of modification	Modified by	Description							
14.2.2022	TuM	A1: 2003713; INTRODUCED DRAWING.	Date	14.2.2022	NAVIX	Axopar	SEE EXP VIEW	36414	
4.5.2023	VR	B2: 2004274: ADDED CONNECTORS	Drawing by	TuM		Boat	Sub-product code	Product code	Project ID
7.11.2023	PF	C3: 2004890; -ES_X.1 instruction	Sheet rev.	3	Copyright by	45	WARDROBE DC FUSE PANEL	HL	181/ 444
			Project rev.	C		Boat model	Title	Loc	Sheet

EXP VIEW
GENERAL

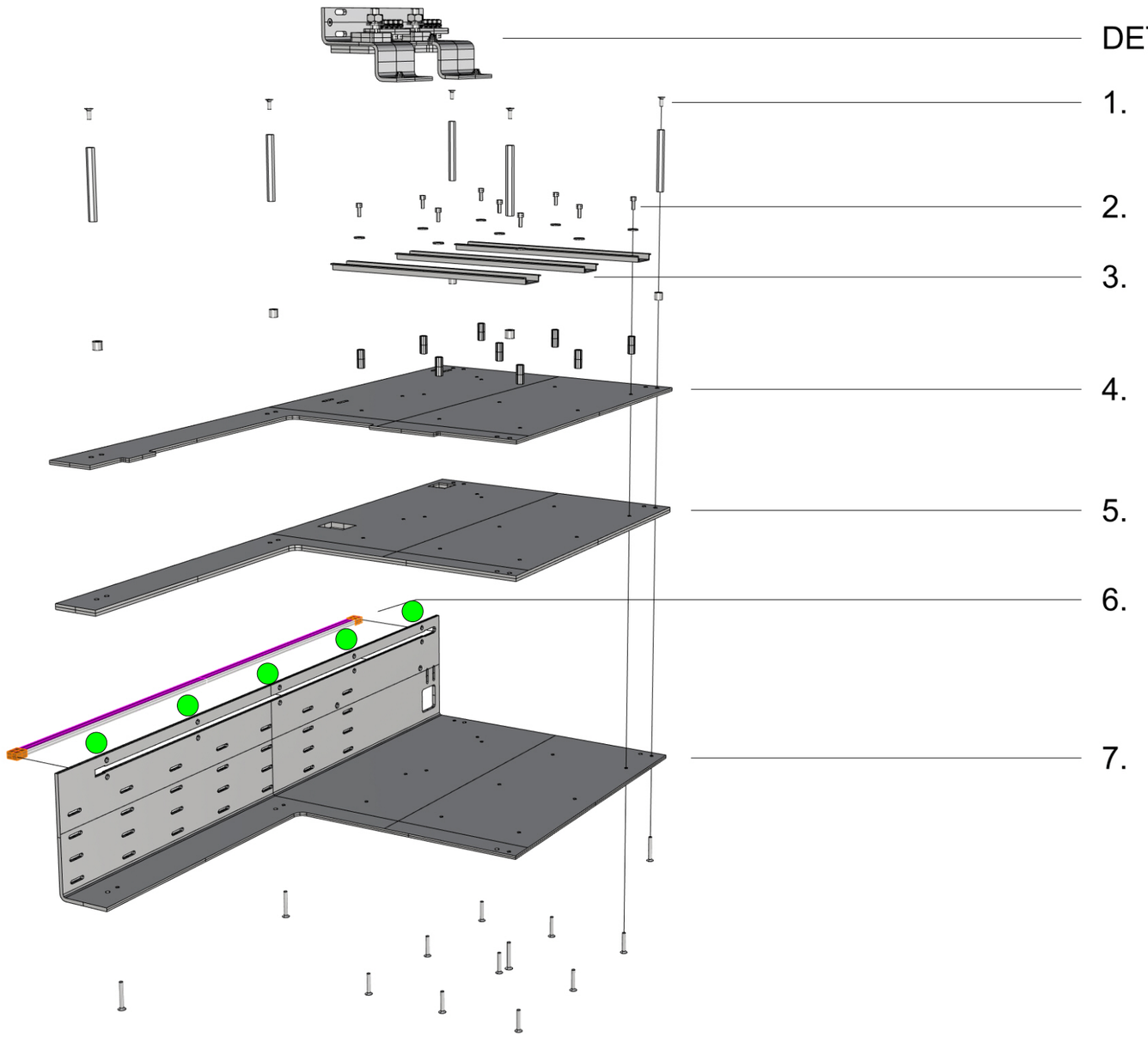

36414_AXOPAR_45_WARDROBE_DC_FUSE_PANEL

1. 5PCS 27022_BOLT_M4X10_HEX_COATED_SOFT_BLACK (TIGHTEN LOOSELY)
 5PCS VMI35429 EXTENSION BOLT M4 L-70
 5PCS 15569_NAVIX_LINE_8mm_SPACER
 5PCS VMI30920 COUNTERSUNK HEAD SCREW HEX SOCKET M4X30 DIN7991

2. 9PCS VMI30943 HEX SOCKET HEAD CAP SCREW M4X10 DIN912
 9PCS VMI30907 M4 WASHER WITH LARGE OUTSIDE DIAMETER 12MM DIN9021
 9PCS VMI32036 EXTENSION BOLT M4 L-20
 9PCS VMI30919 COUNTERSUNK HEAD SCREW HEX SOCKET M4X25 DIN7991

3. 3PCS DIN_RAIL_240mm

4. 1PC 36438_AXOPAR_45_WARDROBE_DC_FUSE_PANEL_TOP_PLATE_V1

5. 1PC 36437_AXOPAR_45_WARDROBE_DC_FUSE_PANEL_MID_PLATE_V1

6. 1PC 33118_LED Strip NEON 12V 4000K side illumination, LENGTH 630MM. (ACCORDING TO DIAGRAM)
 2PCS 33120_Single colour LED Strip end cap 6x12mm

7. 1PC 36436_AXOPAR_45_WARDROBE_DC_FUSE_PANEL_BACK_PLATE_V1

CABLE TIE POINTS
FOR LED STRIPE

Date of modification	Modified by	Description
14.2.2022	TuM	A1: 2003713; INTRODUCED DRAWING.
4.5.2023	VR	B2: 2004274: ADDED CONNECTORS
7.11.2023	PF	C3: 2004890; -ES_X.1 instruction

Date	14.2.2022
Drawing by	TuM
Sheet rev.	3
Project rev.	C

Copyright by

NAVIX

Axopar Boat	SEE EXP VIEW Sub-product code	36414 Product code	Project ID	
45 Boat model	WARDROBE DC FUSE PANEL Title	HL Loc	182 / 444 Sheet	

EXP VIEW
DETAIL 1

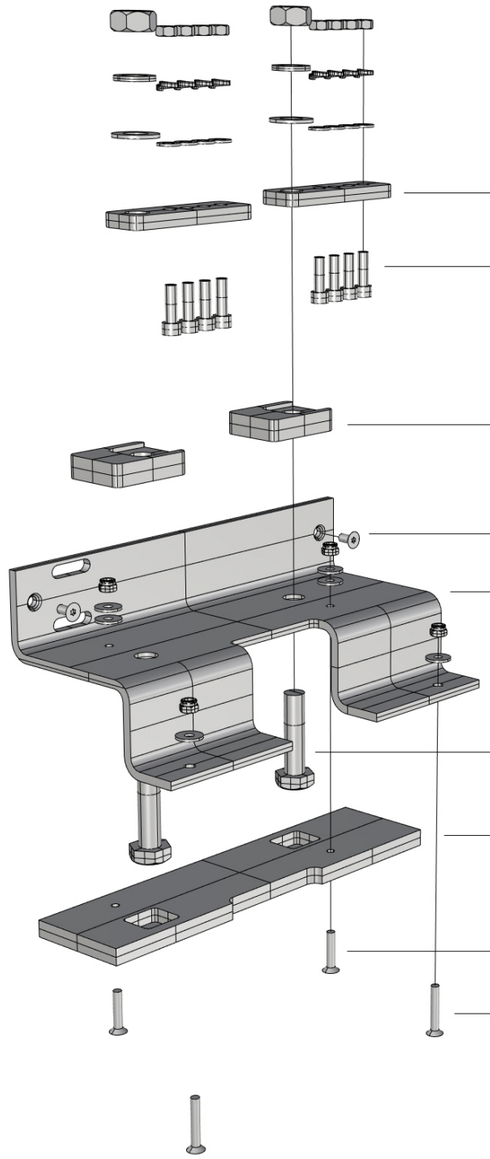

DETAIL 1.

DET1-1. 2PCS 30167_NAVIX_LINE_VIRTAKISKO_FOUR_SPOT_SMALL

DET1-2. 8PCS VMI31817 HEX SOCKET HEAD CAP SCREW M5X16 DIN912
8PCS VMI31541 FLAT WASHER FOR HEX BOLTS AND NUTS M5 DIN125A
8PCS VMI31540 SPRING LOCK WASHER M5 DIN127
8PCS VMI31538 HEX NUT M5 DIN934

DET1-3. 2PCS 33548_NAVIX_LINE_MSU_1X_M10_BOLT_RAISER_V1

DET1-4. 2PCS VMI30913 COUNTERSUNK HEAD SCREW HEX SOCKET M4X8 DIN7991

DET1-5. 1PC 36439_AXOPAR_45_WARDROBE_DC_FUSE_PANEL_HOLDER_V1

DET1-6. 2PCS VMI31901 HEX BOLT FULL THREAD M10X40 DIN933
2PCS VMI32009 FLAT WASHER FOR HEX BOLTS AND NUTS M10 DIN125A
2PCS VMI32008 SPRING LOCK WASHER M10 DIN127
2PCS VMI32010 HEX NUT M10 DIN934

DET1-7. 1PC 36440_AXOPAR_45_WARDROBE_DC_FUSE_PANEL_HOLDER_BACK_V1

DET1-8. 2PCS VMI30918 COUNTERSUNK HEAD SCREW HEX SOCKET M4X20 DIN7991
4PCS VMI30907 M4 WASHER WITH LARGE OUTSIDE DIAMETER 12MM DIN9021
2PCS VMI30818 SELF-LOCKING HEXAGON NUT M4 DIN985

DET1-9. 2PCS VMI30919 COUNTERSUNK HEAD SCREW HEX SOCKET M4X25 DIN7991
2PCS VMI30907 M4 WASHER WITH LARGE OUTSIDE DIAMETER 12MM DIN9021
2PCS VMI30818 SELF-LOCKING HEXAGON NUT M4 DIN985

Date of modification	Modified by	Description
14.2.2022	TuM	A1: 2003713; INTRODUCED DRAWING.
4.5.2023	VR	B2: 2004274: ADDED CONNECTORS
7.11.2023	PF	C3: 2004890; -ES_X.1 instruction

Date 14.2.2022
Drawing by TuM
Sheet rev. 3
Project rev. C

Copyright by

NAVIX

Boat: Axopar
Boat model: 45
Sub-product code: SEE EXP VIEW
Product code: 36414
Project ID:
Title: WARDROBE DC FUSE PANEL
HL:
Loc:
Sheet: 183 / 444

GENERAL LAYOUT/ LABEL INSTALLATION

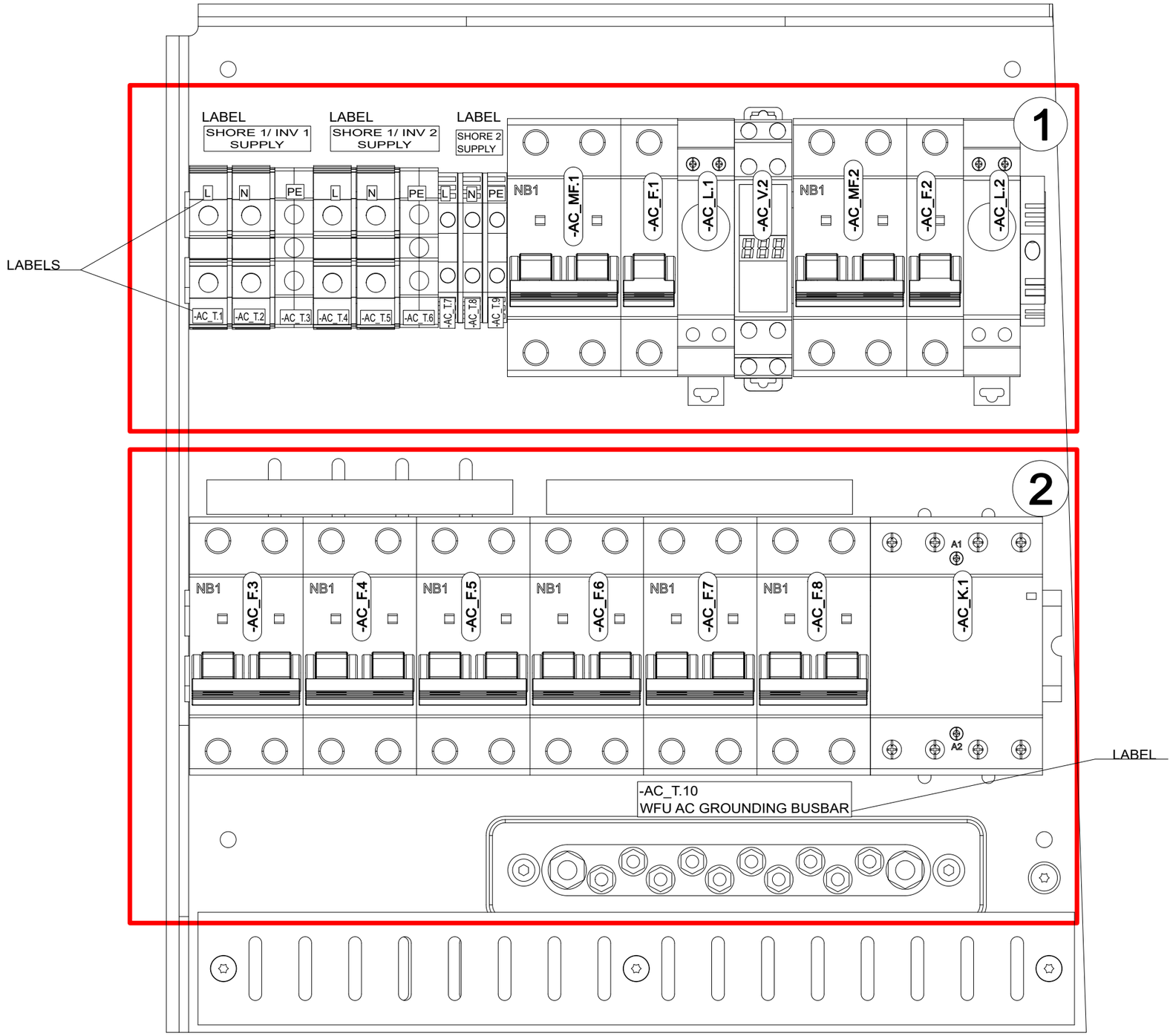

Date of modification	Modified by	Description
15.2.2022	TuM	A1: 2003713; INTRODUCED DRAWING.
6.9.2023	TuM/TT	B2: 2004274; ADDED CABLING
30.5.2024	TuM	C3: 2005065; Voltage meter AC_V2, 41502 END PIECES added.

Date	15.2.2022
Drawing by	TuM
Sheet rev.	3
Project rev.	C

Copyright by

Axopar Boat	SEE EXP VIEW Sub-product code	36415 Product code	Project ID
45 Boat model	ZERO EM WARDROBE AC BRK PANEL - EU Title	HL Loc	184 / 444 Sheet

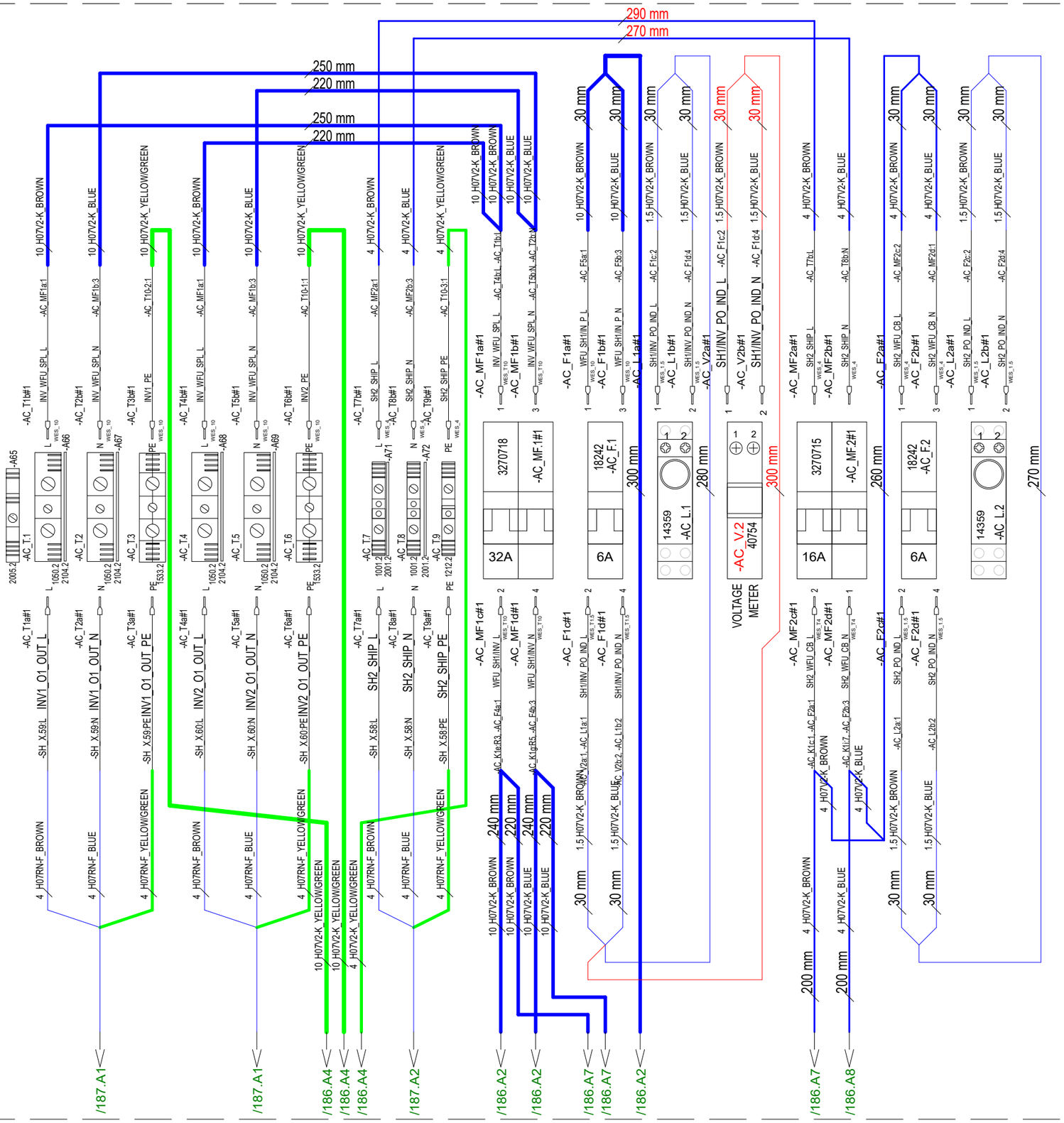

15.2.2022	TuM	A1: 2003713; INTRODUCED DRAWING.	Date	15.2.2022	NAVIX	Axopar	SEE EXP VIEW	36415	
6.9.2023	TuM/TT	B2: 2004274; ADDED CABLING	Drawing by	TuM		Boat	Sub-product code	Product code	Project ID
30.5.2024	TuM	C3: 2005065; Voltage meter AC_V2, 41502 END PIECES added.	Sheet rev.	3		45	ZERO EM WARDROBE AC BRK PANEL - EU	HL	185 / 444
Date of modification	Modified by	Description	Project rev.	C	Copyright by	Boat model	Title	Loc	Sheet

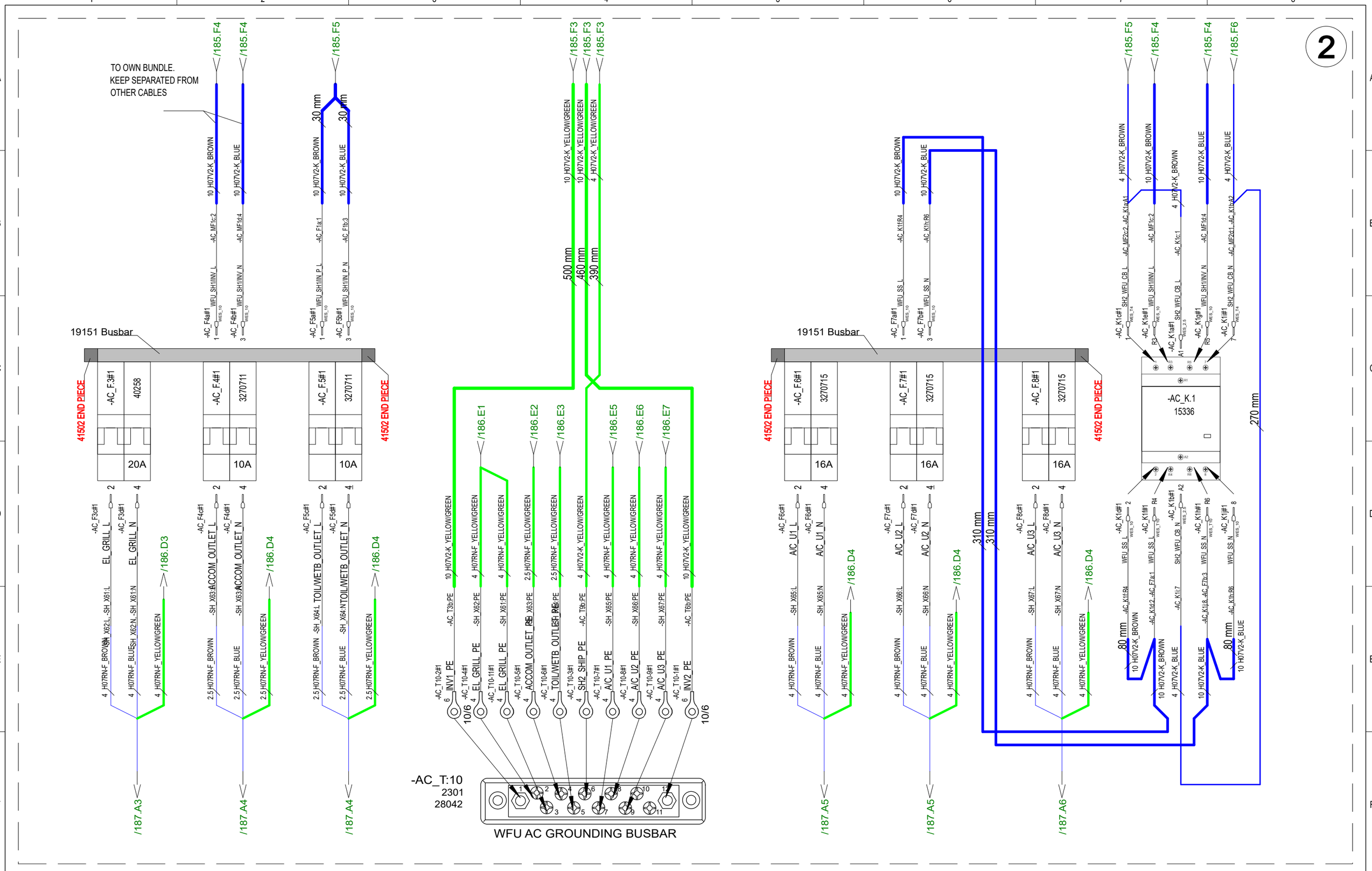

15.2.2022	TuM	A1: 2003713; INTRODUCED DRAWING.	Date	15.2.2022	NAVIX	Axopar	SEE EXP VIEW	36415
6.9.2023	TuM/TT	B2: 2004274; ADDED CABLING	Drawing by	TuM		Boat	Sub-product code	Product code
30.5.2024	TuM	C3: 2005065; Voltage meter AC_V2, 41502 END PIECES added.	Sheet rev.	3		45	ZERO EM WARDROBE	HL
Date of modification	Modified by	Description	Project rev.	C	Copyright by	Boat model	AC BRK PANEL - EU	Loc
							Title	Sheet

Project ID

186 / 444

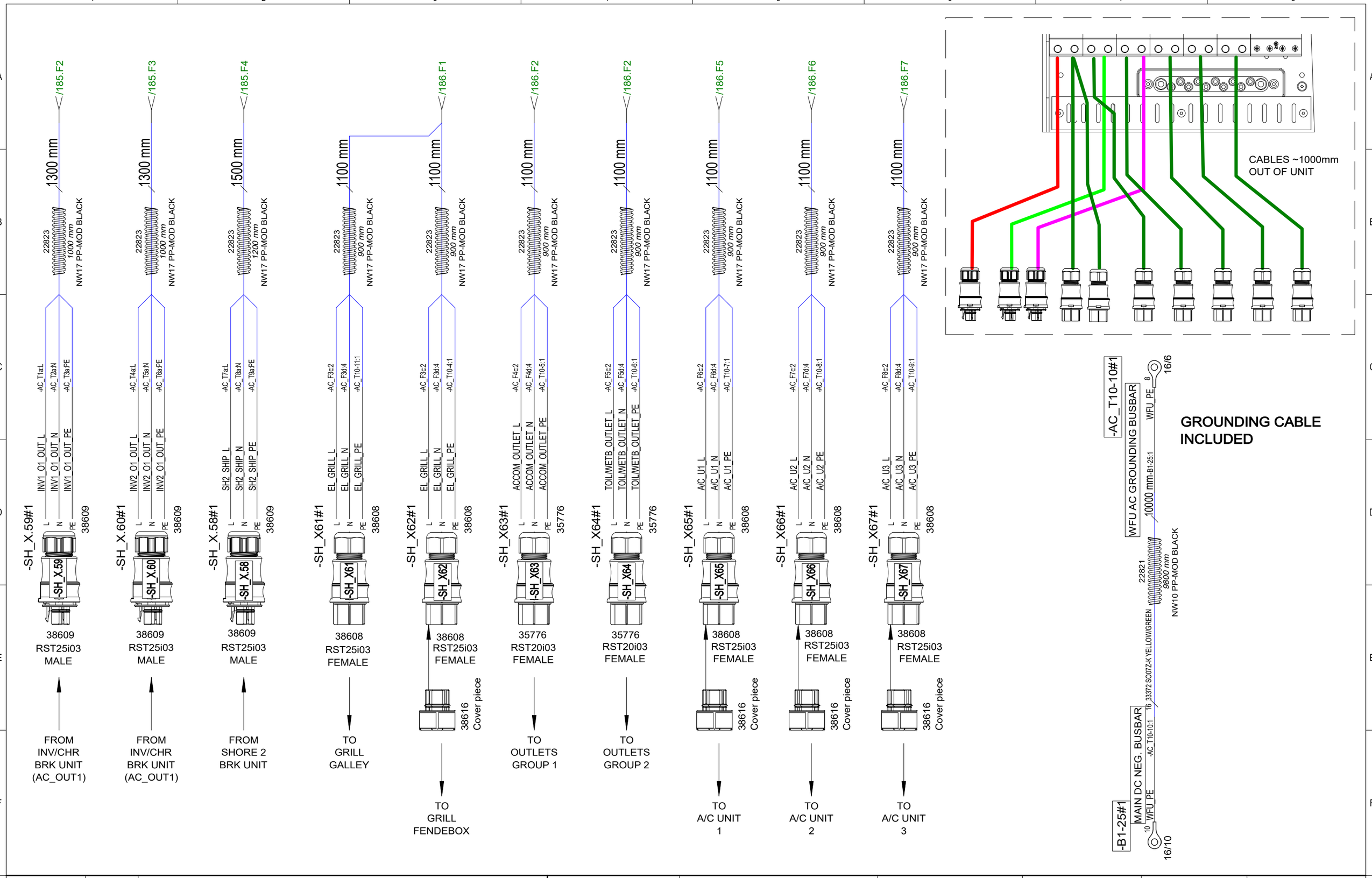

15.2.2022	TuM	A1: 2003713; INTRODUCED DRAWING.	Date	15.2.2022	NAVIX	Axopar	SEE EXP VIEW	36415
6.9.2023	TuM/TT	B2: 2004274; ADDED CABLING	Drawing by	TuM		Boat	Sub-product code	Product code
30.5.2024	TuM	C3: 2005065; Voltage meter AC_V2, 41502 END PIECES added.	Sheet rev.	3		45	ZERO EM WARDROBE AC BRK PANEL - EU	HL
Date of modification	Modified by	Description	Project rev.	C	Copyright by	Boat model	Title	Loc

Project ID

Sheet 187 / 444

EXP VIEW GENERAL

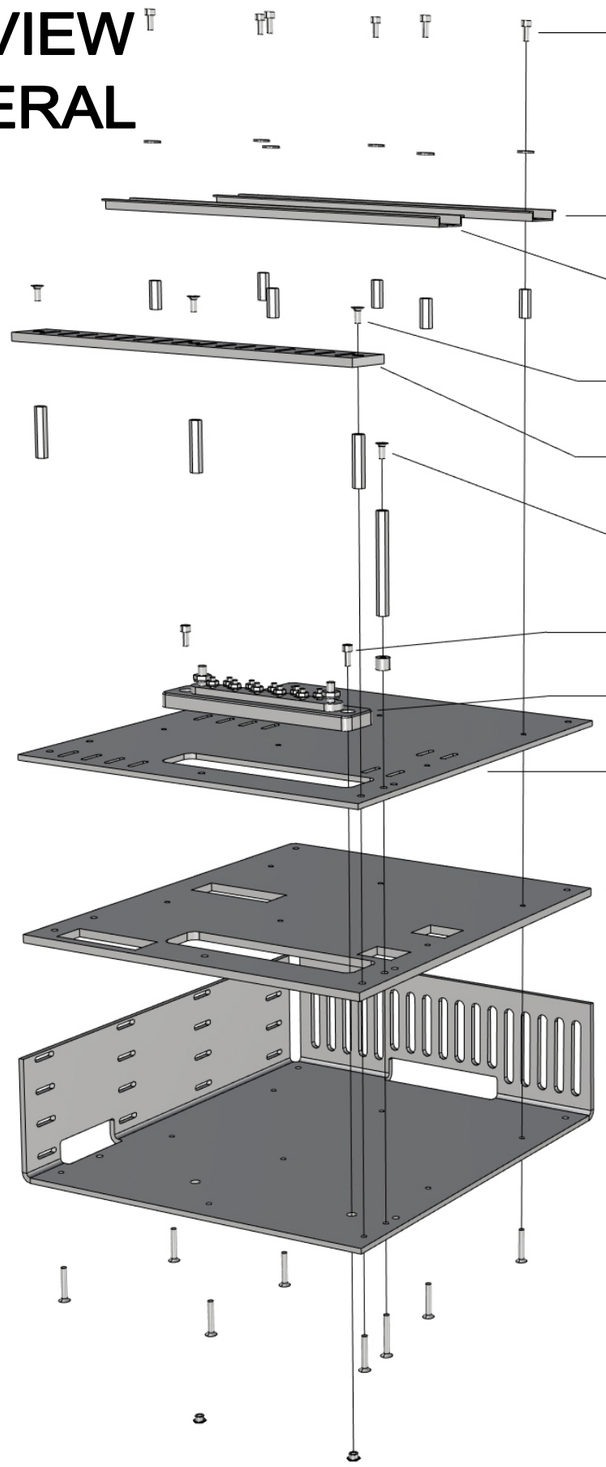

36415_AXOPAR_45_ZERO_EM_WARDROBE_AC_BRK_PANEL_EU

1. 6PCS VMI30943 HEX SOCKET HEAD CAP SCREW M4X10 DIN912
   6PCS VMI30907 M4 WASHER WITH LARGE OUTSIDE DIAMETER 12MM DIN9021
   6PCS VMI32036 EXTENSION BOLT M4 L-20
   6PCS VMI30919 COUNTERSUNK HEAD SCREW HEX SOCKET M4X25 DIN7991

2. 1PCS DIN_RAIL_270mm

3. 1PCS DIN_RAIL_275mm

4. 3PCS VMI30914 COUNTERSUNK HEAD SCREW HEX SOCKET M4X10 DIN7991
   3PCS VMI32039 EXTENSION BOLT M4 L-35
   3PCS VMI30919 COUNTERSUNK HEAD SCREW HEX SOCKET M4X25 DIN7991

5. 1PC 36444_AXOPAR_45_ZERO_EM_WARDROBE_AC_BRK_PANEL_EU_RACK_V1

6. 1PCS 27022_BOLT_M4X10_HEX_COATED_SOFT_BLACK (TIGHTEN LOOSELY)
   1PCS VMI35429 EXTENSION BOLT M4 L-70
   1PCS 15569_NAVIX_LINE_8mm_SPACER
   1PCS VMI30920 COUNTERSUNK HEAD SCREW HEX SOCKET M4X30 DIN7991

7. 2PCS VMI30943 HEX SOCKET HEAD CAP SCREW M4X10 DIN912
   2PCS 9872 M4 X 4 ETSOS

8. 1PC 28042 - Busbar 10 Gang 150A - Blue Sea 2301

9. 1PC 36443_AXOPAR_45_ZERO_EM_WARDROBE_AC_BRK_PANEL_EU_TOP_V1

10. 1PC 36442_AXOPAR_45_ZERO_EM_WARDROBE_AC_BRK_PANEL_EU_MID_V1

11. 1PC 36441_AXOPAR_45_ZERO_EM_WARDROBE_AC_BRK_PANEL_EU_BACK_V1

26.01.2022 TS

Date of modification	Modified by	Description
15.2.2022	TuM	A1: 2003713; INTRODUCED DRAWING.
6.9.2023	TuM/TT	B2: 2004274; ADDED CABLING
30.5.2024	TuM	C3: 2005065; Voltage meter AC_V2, 41502 END PIECES added.

Date	15.2.2022
Drawing by	TuM
Sheet rev.	3
Project rev.	C

Copyright by

NAVIX

Axopar Boat	SEE EXP VIEW Sub-product code	36415 Product code	Project ID
45 Boat model	ZERO EM WARDROBE AC BRK PANEL - EU Title	HL Loc	188 / 444 Sheet

SPC TARKASTUSPÖYTÄKIRJA
SPC INSPECTION SHEET

TUOTE TARRA /
PRODUCT LABEL

* PPKKVV-JÄRJESTYSNUMERO / DDMMYY-RUNNING NUMBER (Esim. 11. maaliskuuta 2013 tehty tuote on sarjanumeroltaan 110313-01, seuraava on 110313-02 jne.)

SARJANUMERO* / SERIAL NUMBER*						
JOHDOT KIINNI OIKEIN / CORRECT CONNECTIONS						
MAADOITUS TULEVAT JA LÄHTEVÄT / GROUND CONNECTION IN AND OUT						
VVS JA TOTSIT I-ASENNOSSA / RCBO AND CIRCUIT BREAKERS IN I-POSITION						
ERISTYSVASTUS (mA) max lukema ** / ISOLATION RESISTOR (mA) max **						
MAAPIIRI 10A (Ohm) max lukema ** / GROUND CIRCUIT 10A (Ohm) max **						
TOIMINNALLINEN JA VVS TESTAUS / FUNCTIONAL AND RCBO TEST						
SARJANUMERO TARRA / SERIAL NUMBER STICKER						
PVM / DATE						
TESTASI / TESTED BY						

Tehty CENELEC EN 50106 mukaan / Made according to CENELEC EN 50106

**ERISTYSVASTUS JA MAAPIIRI TESTATTAVA JOKAISEEN SISÄÄNTULOON JA ULOSMENOON / ISOLATION RESISTOR AND GROUND CIRCUIT SHOULD BE TESTED FOR EVERY IN AND OUT

RAJA-ARVOT / LIMITS:

ERISTYSVASTUS / ISOLATING RESISTOR 1000V = <20mA

MAAPIIRI / GROUND CIRCUIT 10A = <0,2 Ohm

Date of modification	Modified by	Description
15.2.2022	TuM	A1: 2003713; INTRODUCED DRAWING.
6.9.2023	TuM/TT	B2: 2004274; ADDED CABLING
30.5.2024	TuM	C3: 2005065; Voltage meter AC_V2, 41502 END PIECES added.

Date 15.2.2022
Drawing by TuM
Sheet rev. 3
Project rev. C

Copyright by NAVIX

Boat: Axopar
Boat model: 45
Sub-product code: SEE EXP VIEW
Product code: 36415
Project ID:
Title: ZERO EM WARDROBE AC BRK PANEL - EU
HL:
Loc:
Sheet: 189 / 444

PACK ALL PRODUCTS TO SAME PACKAGE

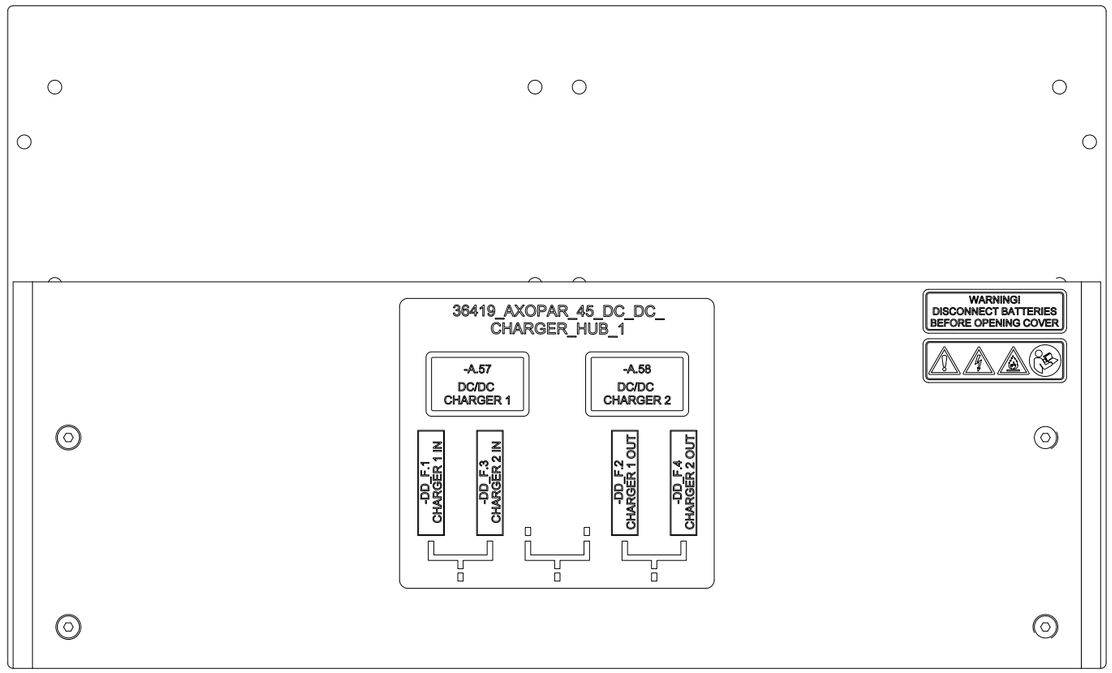

36419 DC/DC CHARGER HUB 1

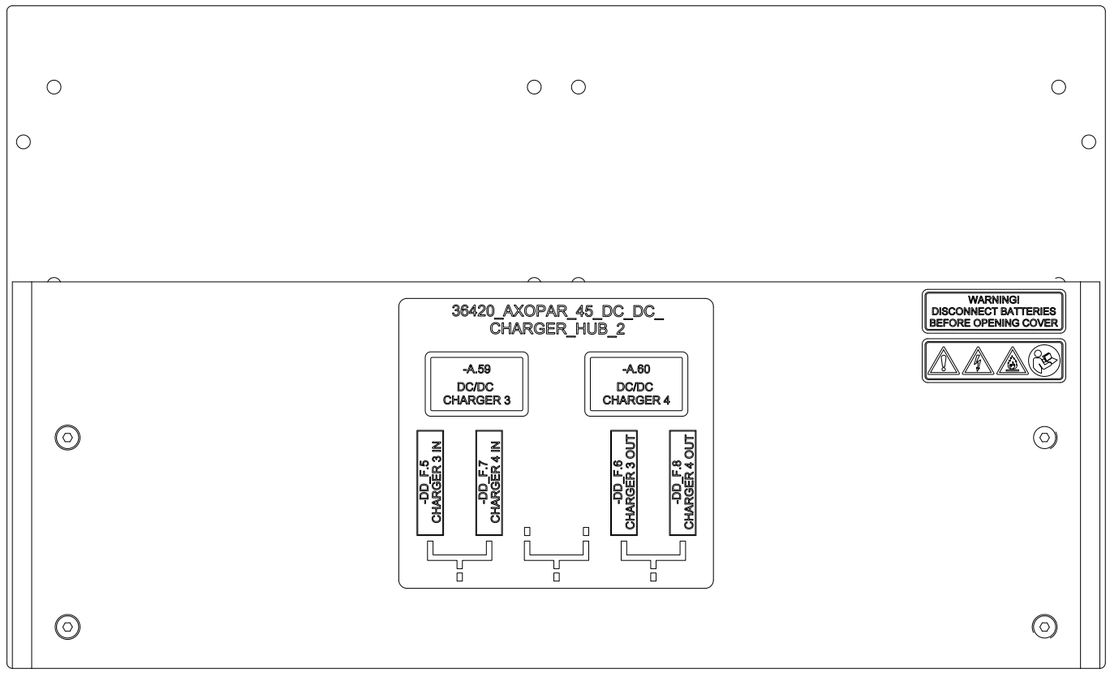

36420 DC/DC CHARGER HUB 2

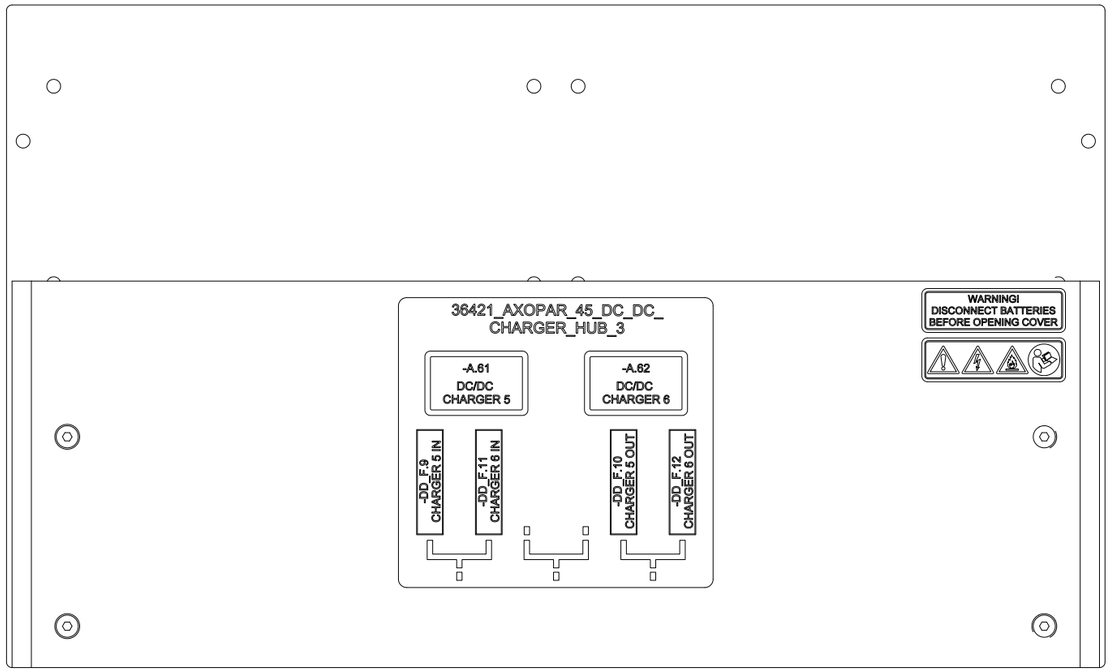

36421 DC/DC CHARGER HUB 3

5.5.2023	RK	B1: 2004274; INTRODUCED DRAWING	Date 4.5.2023	NAVIX	Axopar		36418	
30.5.2024	TuM	C1: 2005065; NOT MODIFIED.	Drawing by TuM		Boat	Sub-product code	Product code	Project ID
			Sheet rev. 1		45	DC/DC CHARGER HUB	HL	190 / 444
Date of modification	Modified by	Description	Project rev. C	Copyright by	Boat model	Title	Loc	Sheet

GENERAL LAYOUT/ LABEL INSTALLATION

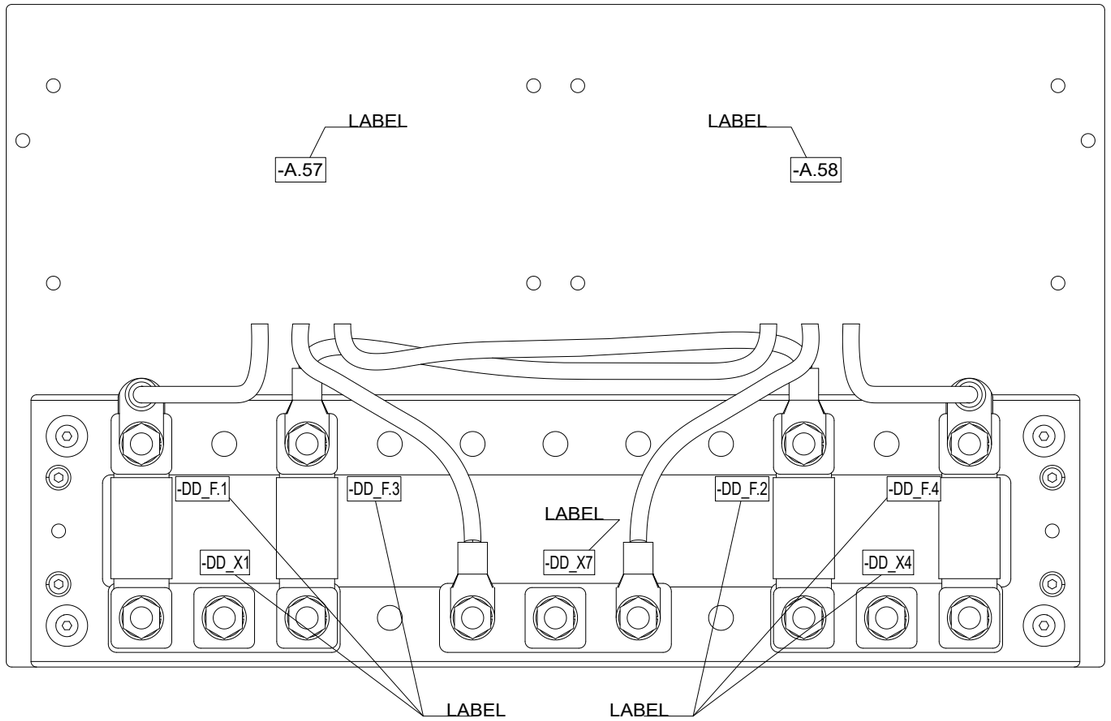

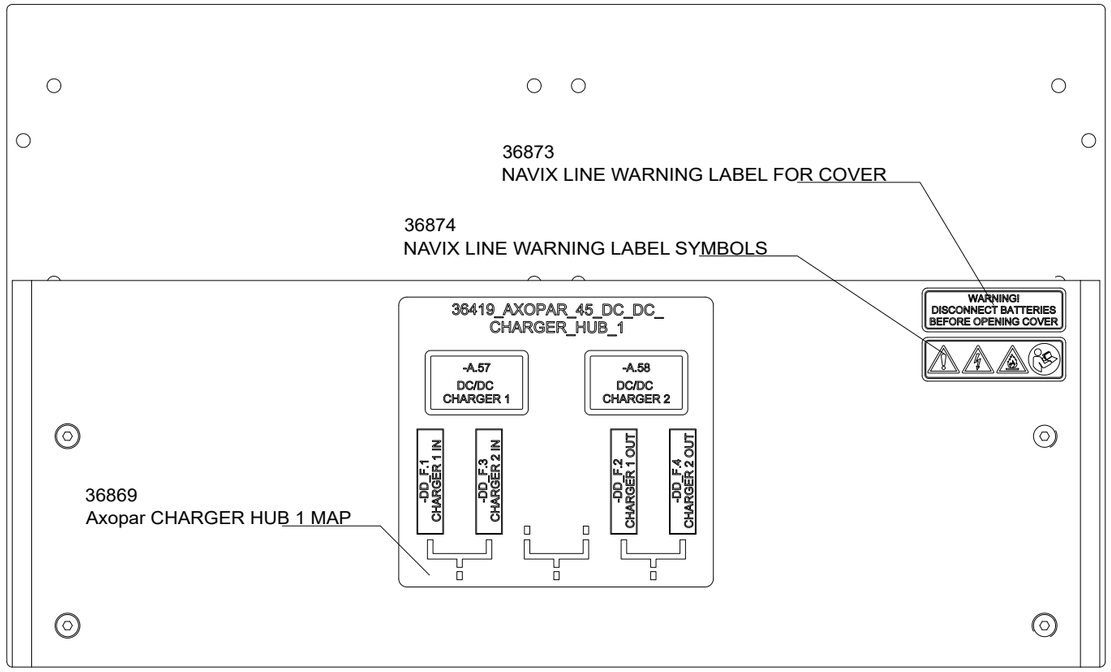

13.6.2022	TuM	A1: 2003713; INTRODUCED DRAWING.	Date	13.6.2022	NAVIX	Axopar	SEE EXP VIEW	36419	
3.5.2023	RK	B1: 2004274; NOT MODIFIED.	Drawing by	TuM		Boat	Sub-product code	Product code	Project ID
30.5.2024	TuM	C1: 2005065; NOT MODIFIED.	Sheet rev.	1		45	DC/DC CHARGER HUB 1	HL	191/ 444
Date of modification	Modified by	Description	Project rev.	C	Copyright by	Boat model	Title	Loc	Sheet

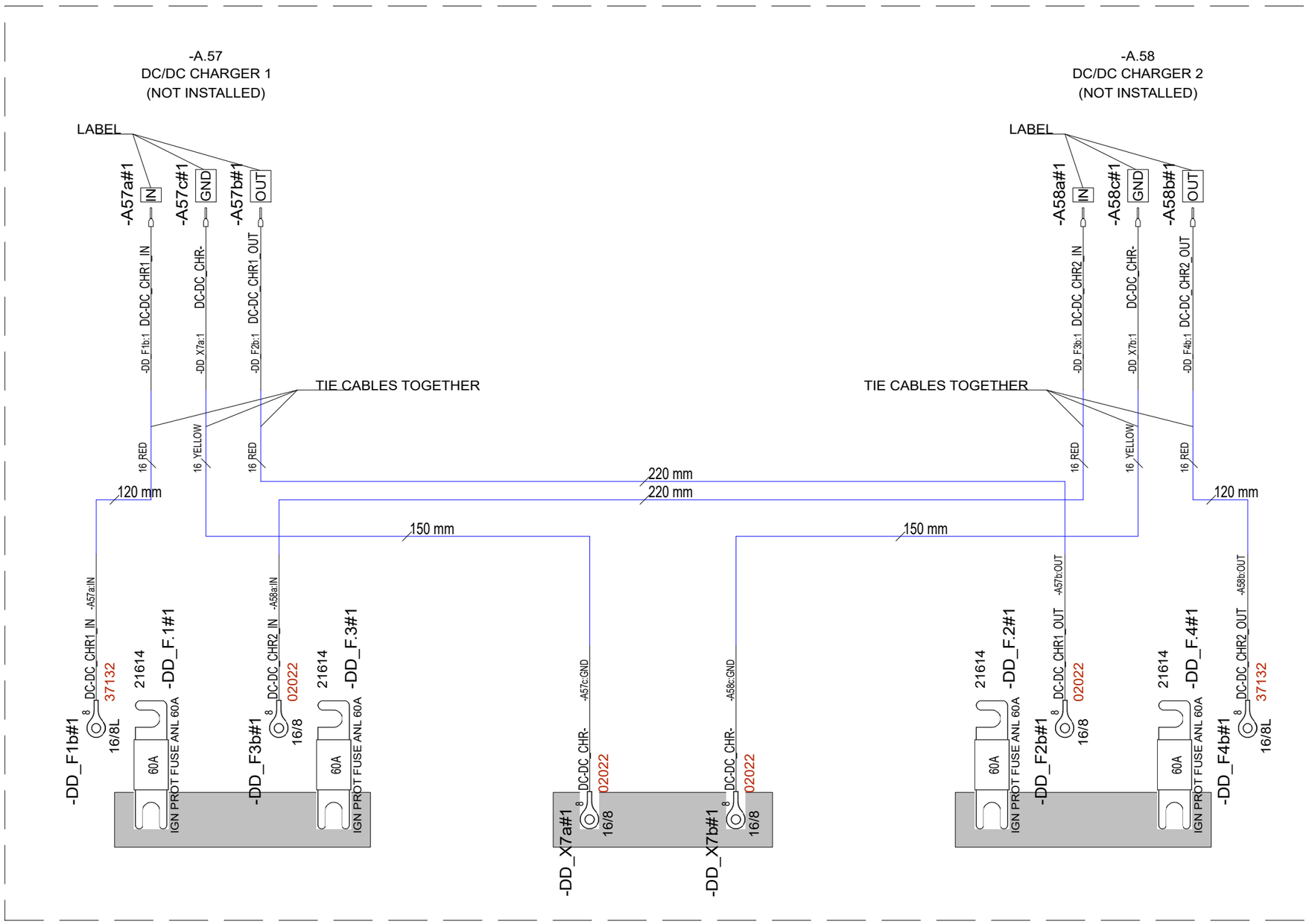

13.6.2022	TuM	A1: 2003713; INTRODUCED DRAWING.	Date	13.6.2022		Axopar		
3.5.2023	RK	B1: 2004274; NOT MODIFIED.	Drawing by	TuM	NAVIX	Boat	SEE EXP VIEW	36419
30.5.2024	TuM	C1: 2005065; NOT MODIFIED.	Sheet rev.	1		45	Sub-product code	Product code
Date of modification	Modified by	Description	Project rev.	C	Copyright by	Boat model	DC/DC CHARGER HUB 1	Project ID
							Title	HL
								Loc
								192 / 444 Sheet

EXP VIEW

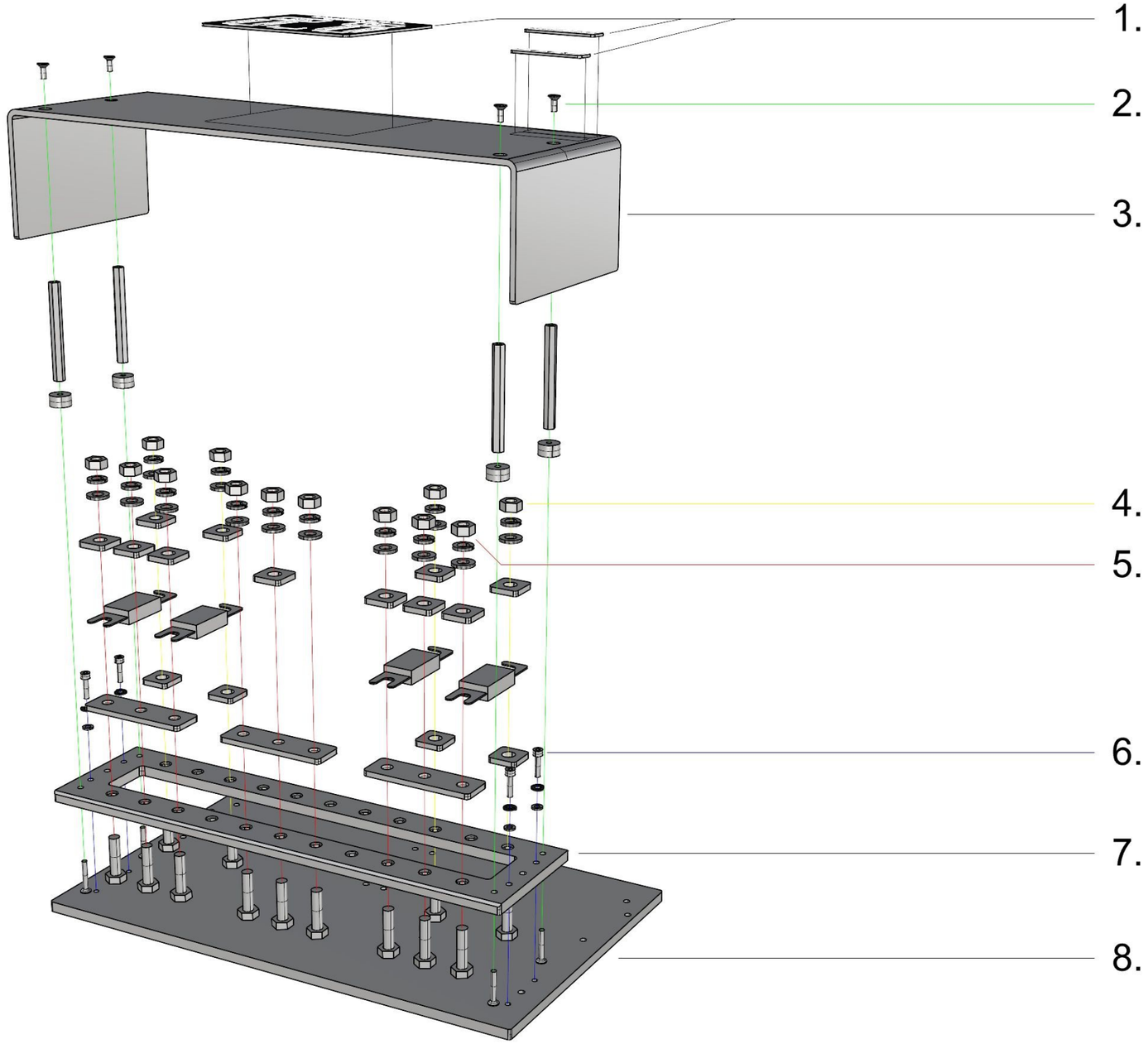

DETAIL 1 OF ASSEMBLY

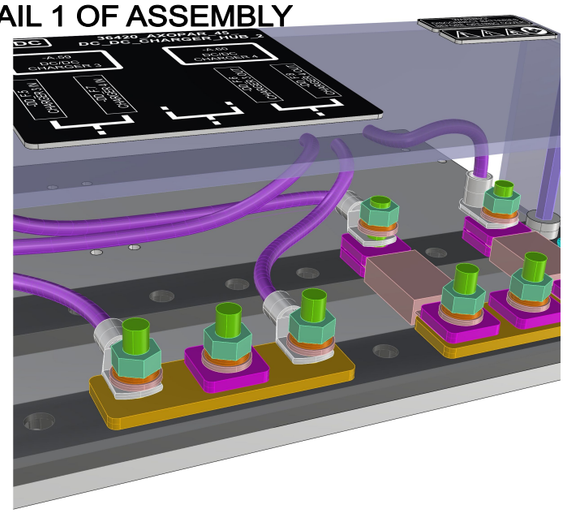

36419_AXOPAR_45_DC_DC_CHARGER_HUB_1

1. - LABELS (AS IN AD)

2. 4PCS VMI30914 COUNTERSUNK HEAD SCREW HEX SOCKET M4X10 DIN7991
4PCS VMI35429 EXTENSION BOLT M4 L-70
4PCS 29063_NAVIX_LINE_8MM_WASHER_V1
4PCS VMI30919 COUNTERSUNK HEAD SCREW HEX SOCKET M4X25 DIN7991

3. 1PC 36810_AXOPAR_45_DC_CHARGER_HUB_COVER_V1

4. 4PCS VMI32012 HEX NUT M8 DIN934
4PCS VMI32011 SPRING LOCK WASHER M8 DIN127
4PCS VMI32013 FLAT WASHER FOR HEX BOLTS AND NUTS M8 DIN125A
4PCS 3667
- ANL-FUSE (AS IN DIAGRAM)
4PCS 3667
4PCS VMI32019 HEX BOLT FULL THREAD M8X30 DIN933

5. 9PCS VMI32012 HEX NUT M8 DIN934
9PCS VMI32011 SPRING LOCK WASHER M8 DIN127
9PCS VMI32013 FLAT WASHER FOR HEX BOLTS AND NUTS M8 DIN125A
7PCS 3667
- ANL-FUSE (AS IN DIAGRAM)
3PCS 36872_NAVIX_LINE_BUS_BAR_3X_80x25x4
4PCS VMI32019 HEX BOLT FULL THREAD M8X30 DIN933

6. 4PCS VMI30945 HEX SOCKET HEAD CAP SCREW M4X16 DIN912
4PCS VMI30904 SPRING LOCK WASHER M4 DIN127
4PCS VMI30906 FLAT WASHER FOR HEX BOLTS AND NUTS M4 DIN125A

7. 1PC 36811_AXOPAR_45_DC_CHARGER_HUB_ANL_BRACKET_V1

8. 1PC 36809_AXOPAR_45_DC_CHARGER_HUB_BASE_V1

13.05.2022 TS

Date of modification	Modified by	Description
13.6.2022	TuM	A1: 2003713; INTRODUCED DRAWING.
3.5.2023	RK	B1: 2004274; NOT MODIFIED.
30.5.2024	TuM	C1: 2005065; NOT MODIFIED.

Date 13.6.2022
Drawing by TuM
Sheet rev. 1
Project rev. C

Copyright by NAVIX

Boat	Sub-product code	Product code	Project ID
Axopar	SEE EXP VIEW	36419	
Boat model	Title	HL	Sheet
45	DC/DC CHARGER HUB 1	Loc	193 / 444

GENERAL LAYOUT/ LABEL INSTALLATION

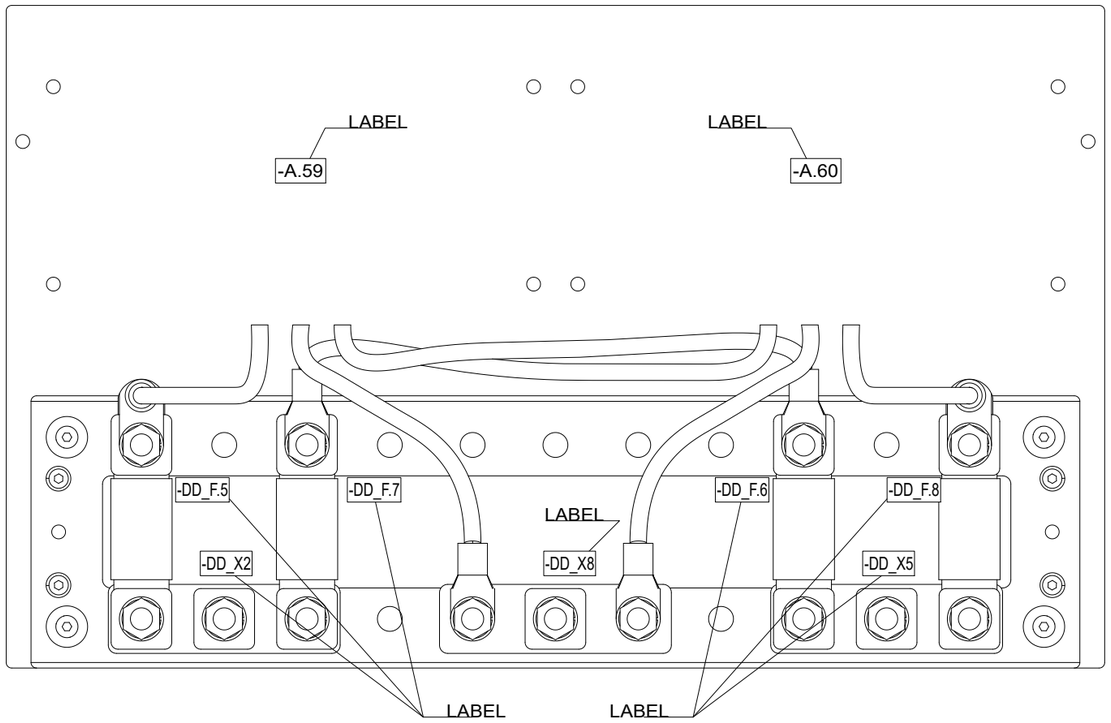

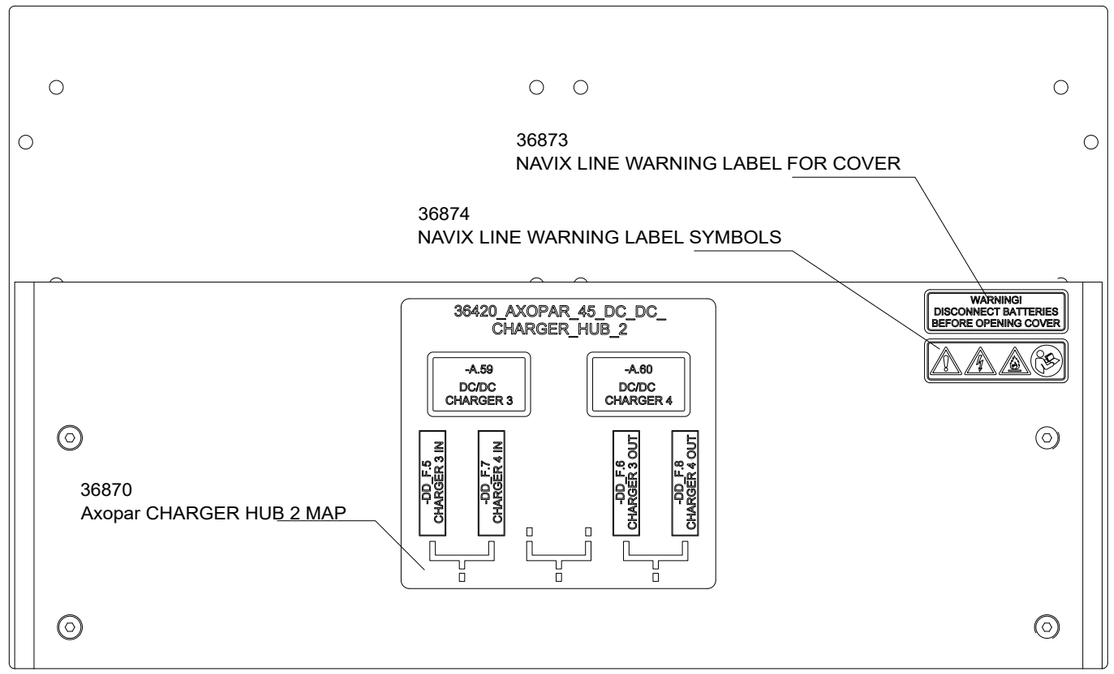

14.6.2022	TuM	A1: 2003713; INTRODUCED DRAWING.	Date 14.6.2022	NAVIX	Axopar	SEE EXP VIEW	36420	
3.5.2023	RK	B1: 2004274; NOT MODIFIED.	Drawing by TuM		Boat	Sub-product code	Product code	Project ID
30.5.2024	TuM	C1: 2005065; NOT MODIFIED.	Sheet rev. 1		45	DC/DC CHARGER HUB 2	HL	194 / 444
Date of modification	Modified by	Description	Project rev. C	Copyright by	Boat model	Title	Loc	Sheet

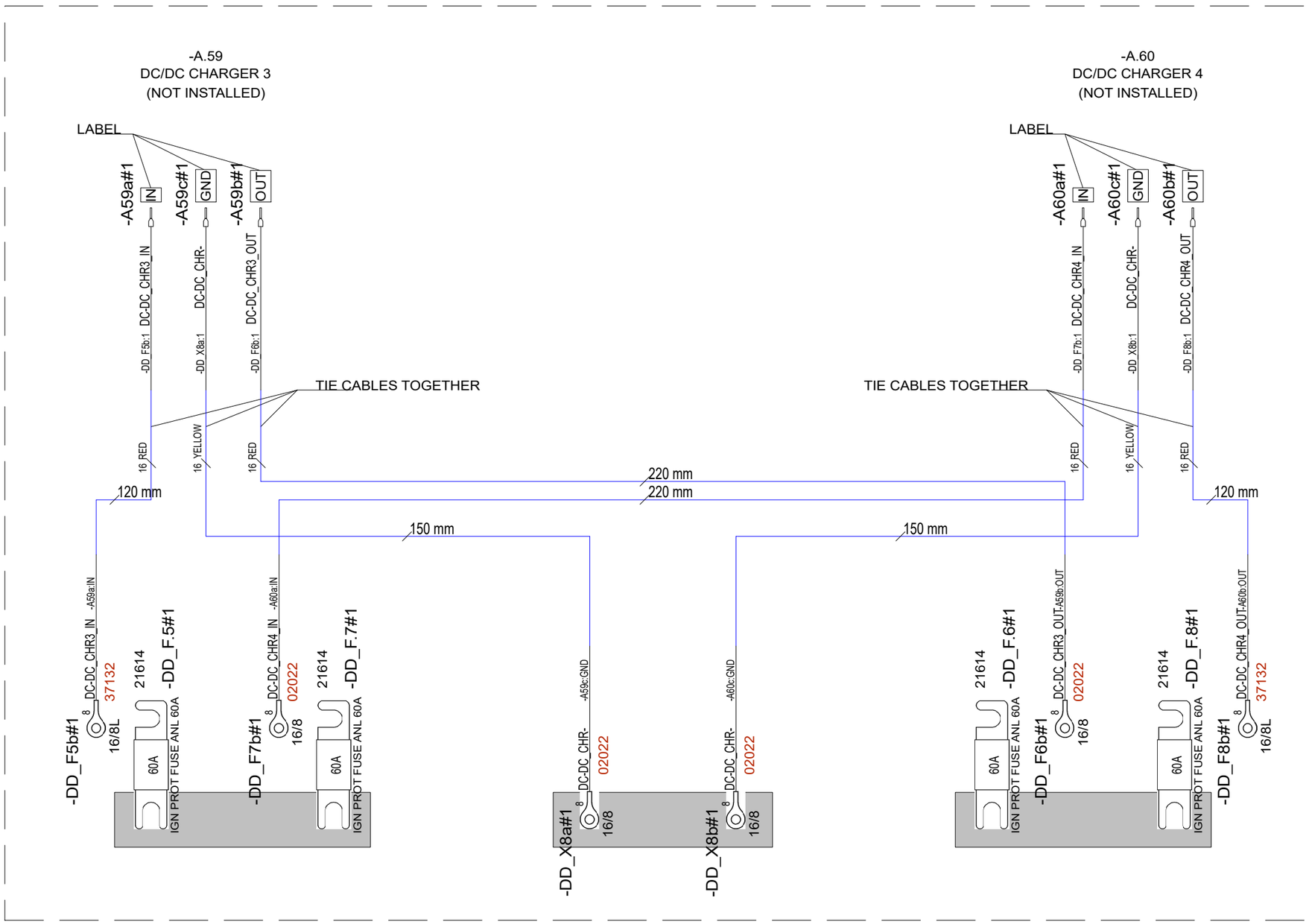

Date of modification	Modified by	Description
14.6.2022	TuM	A1: 2003713; INTRODUCED DRAWING.
3.5.2023	RK	B1: 2004274; NOT MODIFIED.
30.5.2024	TuM	C1: 2005065; NOT MODIFIED.

Date	14.6.2022
Drawing by	TuM
Sheet rev.	1
Project rev.	C

NAVIX

Copyright by

Axopar Boat	SEE EXP VIEW Sub-product code	36420 Product code	Project ID	
45 Boat model	DC/DC CHARGER HUB 2 Title	HL Loc	195 / 444 Sheet	

EXP VIEW

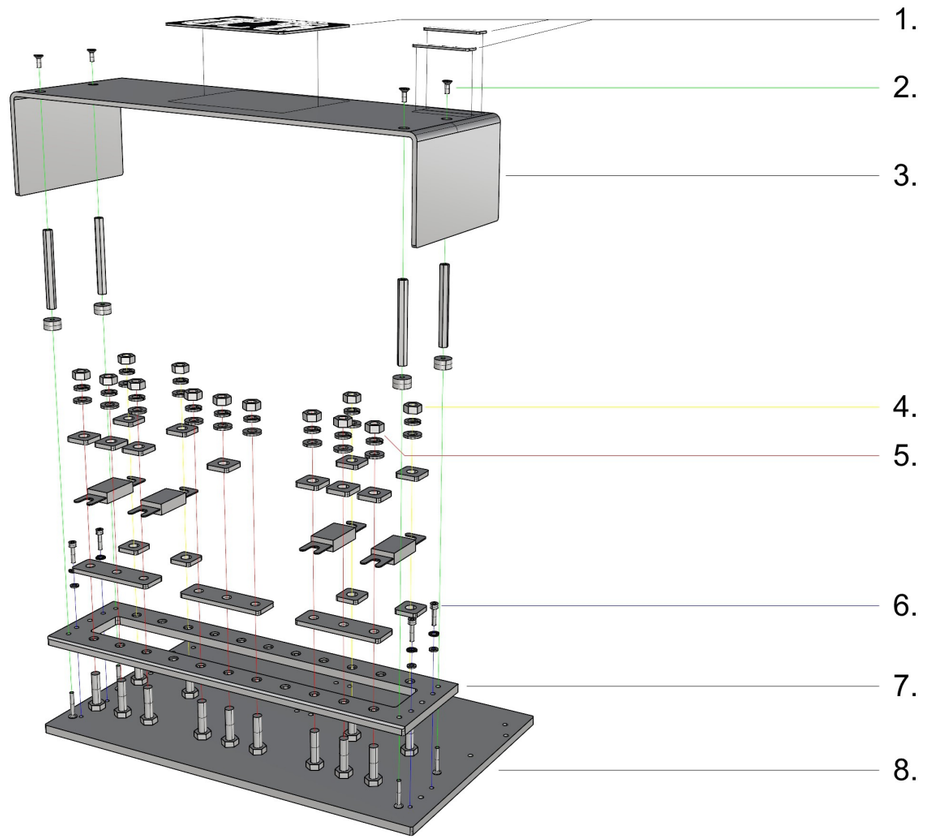

DETAIL 1 OF ASSEMBLY

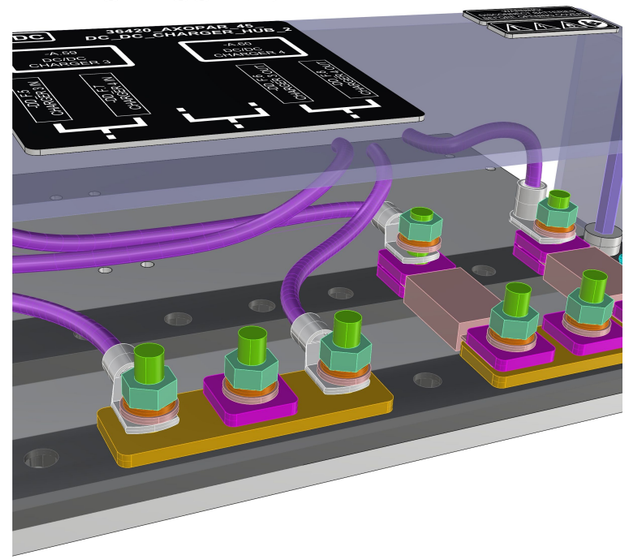

36420_AXOPAR_45_DC_DC_CHARGER_HUB_2

1. - LABELS (AS IN AD)

2. 4PCS VMI30914 COUNTERSUNK HEAD SCREW HEX SOCKET M4X10 DIN7991
4PCS VMI35429 EXTENSION BOLT M4 L-70
4PCS 29063_NAVIX_LINE_8MM_WASHER_V1
4PCS VMI30919 COUNTERSUNK HEAD SCREW HEX SOCKET M4X25 DIN7991

3. 1PC 36810_AXOPAR_45_DC_CHARGER_HUB_COVER_V1

4. 4PCS VMI32012 HEX NUT M8 DIN934
4PCS VMI32011 SPRING LOCK WASHER M8 DIN127
4PCS VMI32013 FLAT WASHER FOR HEX BOLTS AND NUTS M8 DIN125A
4PCS 3667
- ANL-FUSE (AS IN DIAGRAM)
4PCS 3667
4PCS VMI32019 HEX BOLT FULL THREAD M8X30 DIN933

5. 9PCS VMI32012 HEX NUT M8 DIN934
9PCS VMI32011 SPRING LOCK WASHER M8 DIN127
9PCS VMI32013 FLAT WASHER FOR HEX BOLTS AND NUTS M8 DIN125A
7PCS 3667
- ANL-FUSE (AS IN DIAGRAM)
3PCS 36872_NAVIX_LINE_BUS_BAR_3X_80x25x4
9PCS VMI32019 HEX BOLT FULL THREAD M8X30 DIN933

6. 4PCS VMI30945 HEX SOCKET HEAD CAP SCREW M4X16 DIN912
4PCS VMI30904 SPRING LOCK WASHER M4 DIN127
4PCS VMI30906 FLAT WASHER FOR HEX BOLTS AND NUTS M4 DIN125A

7. 1PC 36811_AXOPAR_45_DC_CHARGER_HUB_ANL_BRACKET_V1

8. 1PC 36809_AXOPAR_45_DC_CHARGER_HUB_BASE_V1

13.05.2022 TS

Date of modification	Modified by	Description
14.6.2022	TuM	A1: 2003713; INTRODUCED DRAWING.
3.5.2023	RK	B1: 2004274; NOT MODIFIED.
30.5.2024	TuM	C1: 2005065; NOT MODIFIED.

Date 14.6.2022
Drawing by TuM
Sheet rev. 1
Project rev. C

Copyright by

NAVIX

Boat: Axopar
Boat model: 45
Sub-product code: SEE EXP VIEW
Product code: 36420
Project ID:
Title: DC/DC CHARGER HUB 2
Loc: HL
Sheet: 196 / 444

GENERAL LAYOUT/ LABEL INSTALLATION

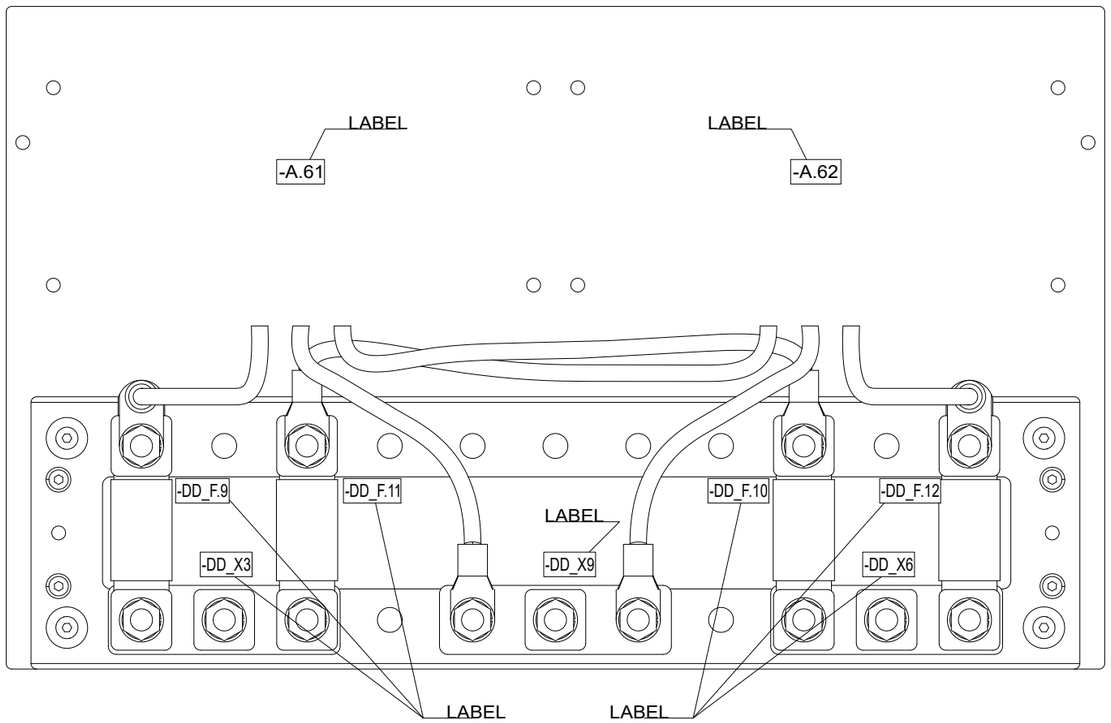

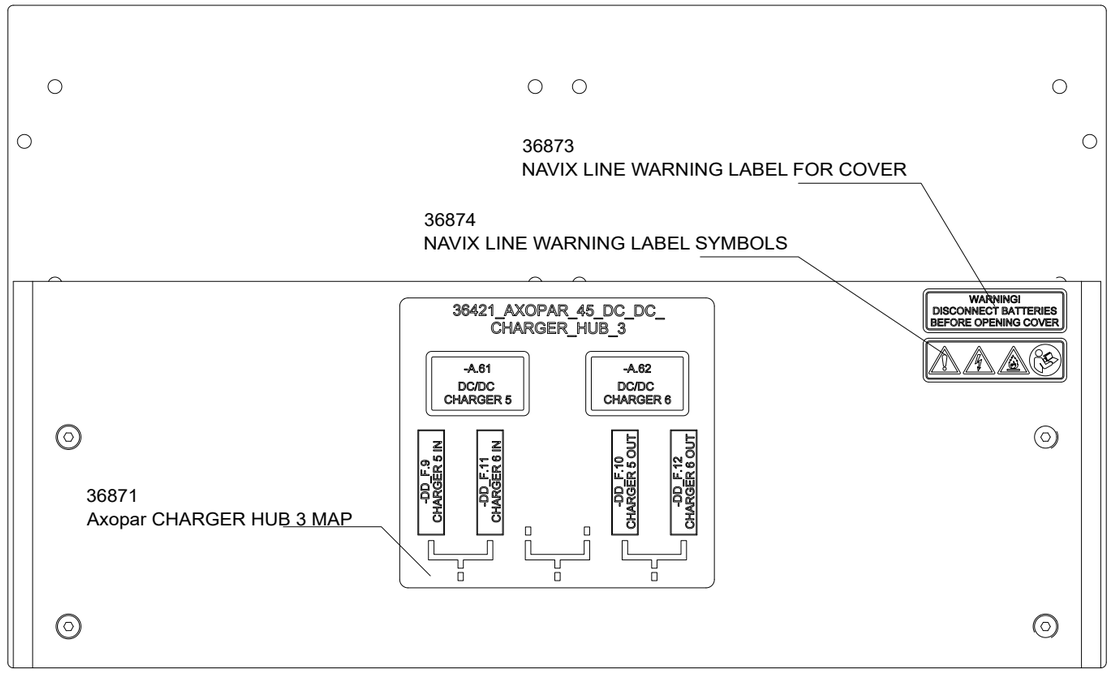

Date of modification	Modified by	Description
14.6.2022	TuM	A1: 2003713; INTRODUCED DRAWING.
3.5.2023	RK	B1: 2004274; NOT MODIFIED.
30.5.2024	TuM	C1: 2005065; NOT MODIFIED.

Date	14.6.2022
Drawing by	TuM
Sheet rev.	1
Project rev.	C

Copyright by

NAVIX

Axopar Boat	SEE EXP VIEW Sub-product code	36421 Product code	Project ID	
45 Boat model	DC/DC CHARGER HUB 3 Title	HL Loc	197 / 444 Sheet	

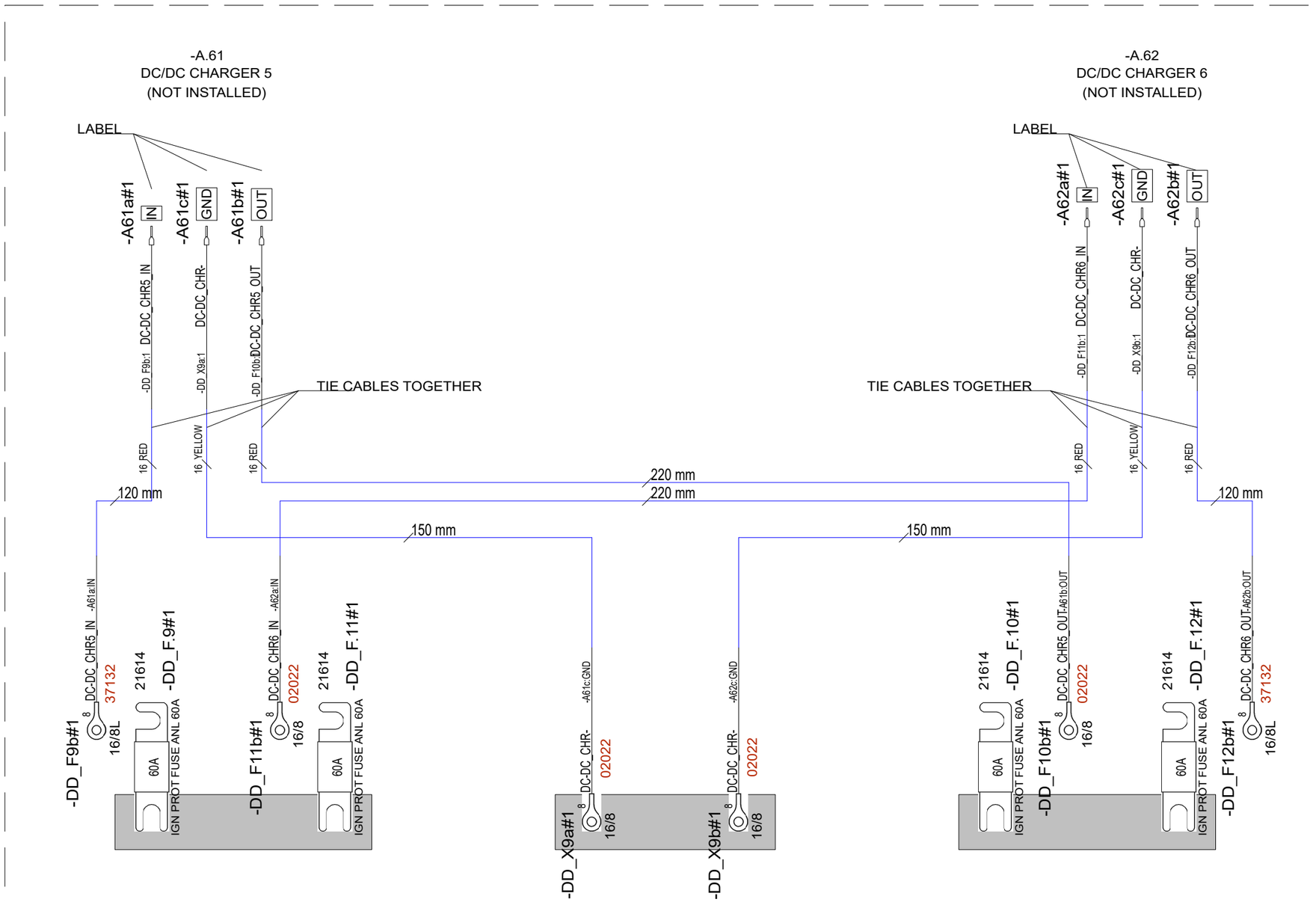

Date of modification	Modified by	Description						
14.6.2022	TuM	A1: 2003713; INTRODUCED DRAWING.	Date	14.6.2022	NAVIX	Axopar	SEE EXP VIEW	36421
3.5.2023	RK	B1: 2004274; NOT MODIFIED.	Drawing by	TuM		Boat	Sub-product code	Product code
30.5.2024	TuM	C1: 2005065; NOT MODIFIED.	Sheet rev.	1	Copyright by	45	DC/DC CHARGER HUB 3	HL
			Project rev.	C		Boat model	Title	Loc
								Project ID
								198 / 444 Sheet

EXP VIEW

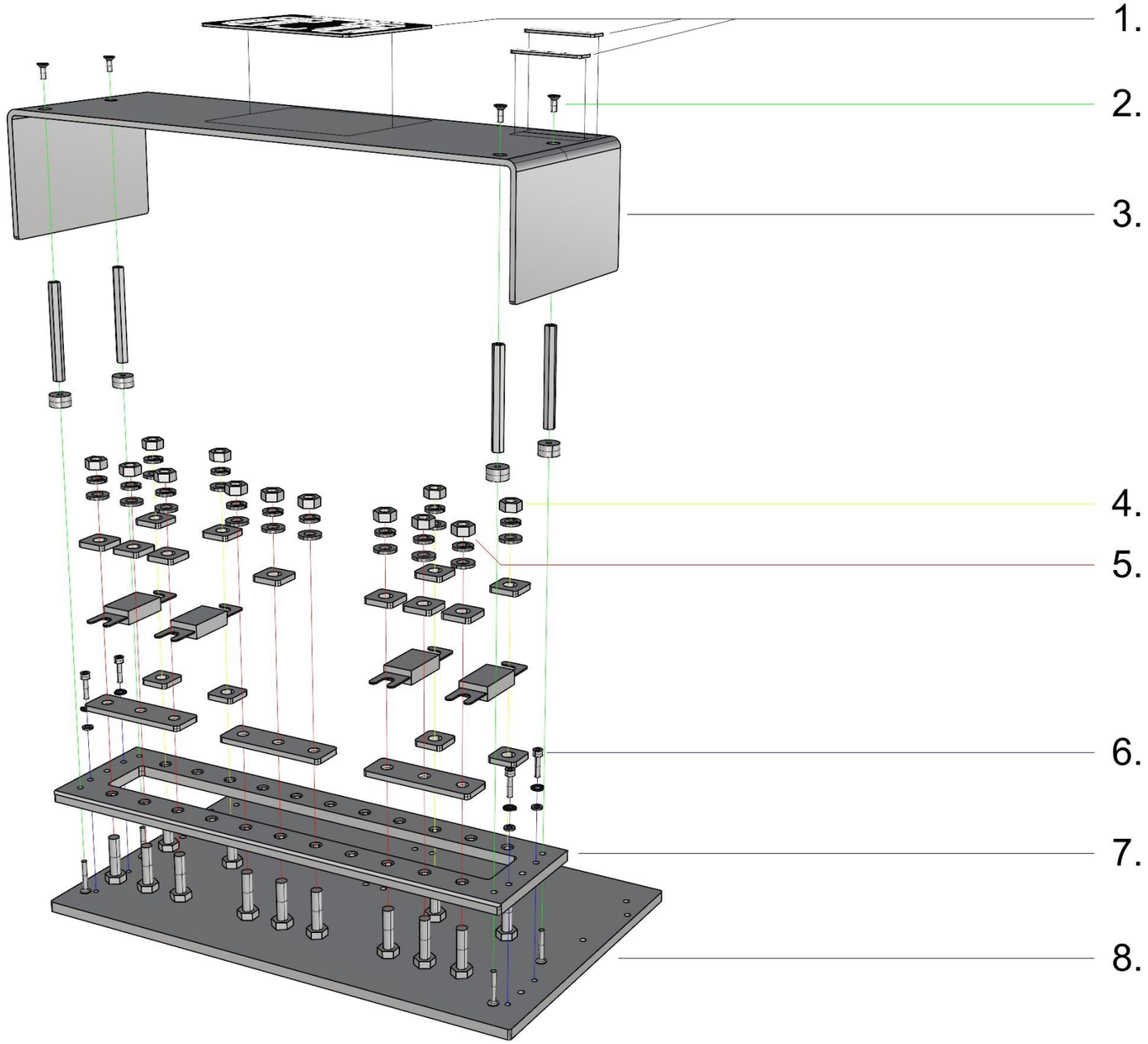

DETAIL 1 OF ASSEMBLY

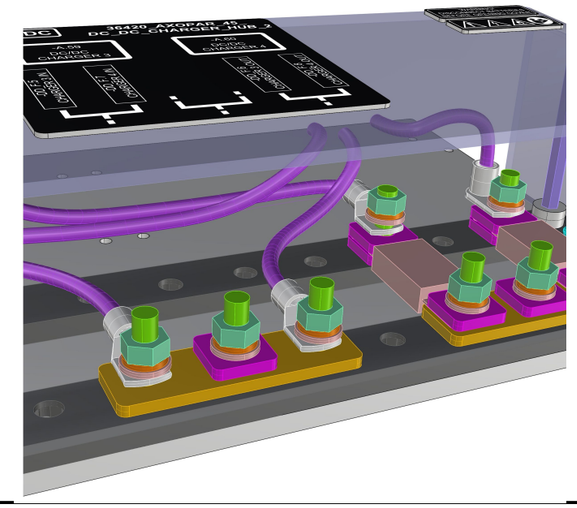

36421_AXOPAR_45_DC_DC_CHARGER_HUB_3

1. - LABELS (AS IN AD)

2. 4PCS VMI30914 COUNTERSUNK HEAD SCREW HEX SOCKET M4X10 DIN7991
4PCS VMI35429 EXTENSION BOLT M4 L-70
4PCS 29063_NAVIX_LINE_8MM_WASHER_V1
4PCS VMI30919 COUNTERSUNK HEAD SCREW HEX SOCKET M4X25 DIN7991

3. 1PC 36810_AXOPAR_45_DC_CHARGER_HUB_COVER_V1

4. 4PCS VMI32012 HEX NUT M8 DIN934
4PCS VMI32011 SPRING LOCK WASHER M8 DIN127
4PCS VMI32013 FLAT WASHER FOR HEX BOLTS AND NUTS M8 DIN125A
4PCS 3667
- ANL-FUSE (AS IN DIAGRAM)
4PCS 3667
4PCS VMI32019 HEX BOLT FULL THREAD M8X30 DIN933

5. 9PCS VMI32012 HEX NUT M8 DIN934
9PCS VMI32011 SPRING LOCK WASHER M8 DIN127
9PCS VMI32013 FLAT WASHER FOR HEX BOLTS AND NUTS M8 DIN125A
7PCS 3667
- ANL-FUSE (AS IN DIAGRAM)
3PCS 36872_NAVIX_LINE_BUS_BAR_3X_80x25x4
4PCS VMI32019 HEX BOLT FULL THREAD M8X30 DIN933

6. 4PCS VMI30945 HEX SOCKET HEAD CAP SCREW M4X16 DIN912
4PCS VMI30904 SPRING LOCK WASHER M4 DIN127
4PCS VMI30906 FLAT WASHER FOR HEX BOLTS AND NUTS M4 DIN125A

7. 1PC 36811_AXOPAR_45_DC_CHARGER_HUB_ANL_BRACKET_V1

8. 1PC 36809_AXOPAR_45_DC_CHARGER_HUB_BASE_V1

13.05.2022 TS

Date of modification	Modified by	Description
14.6.2022	TuM	A1: 2003713; INTRODUCED DRAWING.
3.5.2023	RK	B1: 2004274; NOT MODIFIED.
30.5.2024	TuM	C1: 2005065; NOT MODIFIED.

Date	14.6.2022
Drawing by	TuM
Sheet rev.	1
Project rev.	C

Copyright by NAVIX

Axopar Boat	SEE EXP VIEW Sub-product code	36421 Product code	Project ID
45 Boat model	DC/DC CHARGER HUB 3 Title	HL Loc	199 / 444 Sheet

GENERAL LAYOUT & LABELS
WIRE ROUTES / CABLE TIES

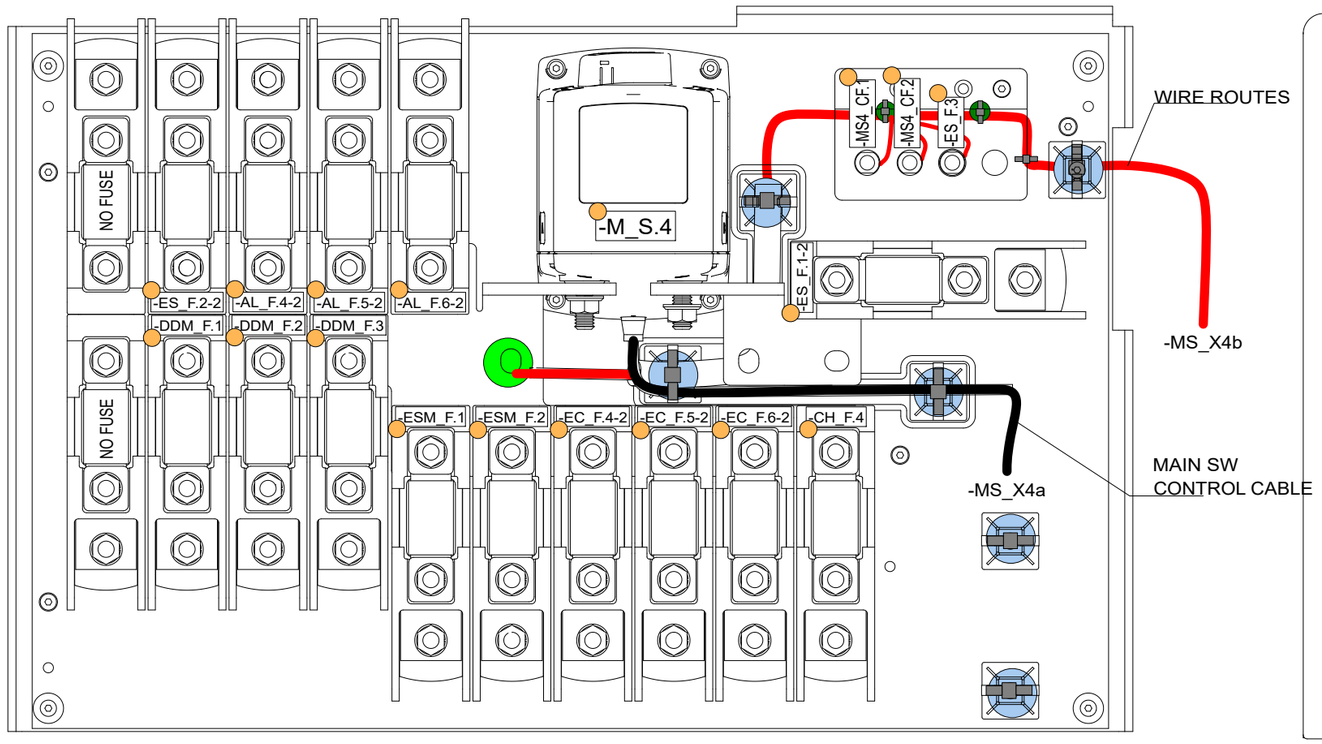

COVER LABEL INSTALLATION

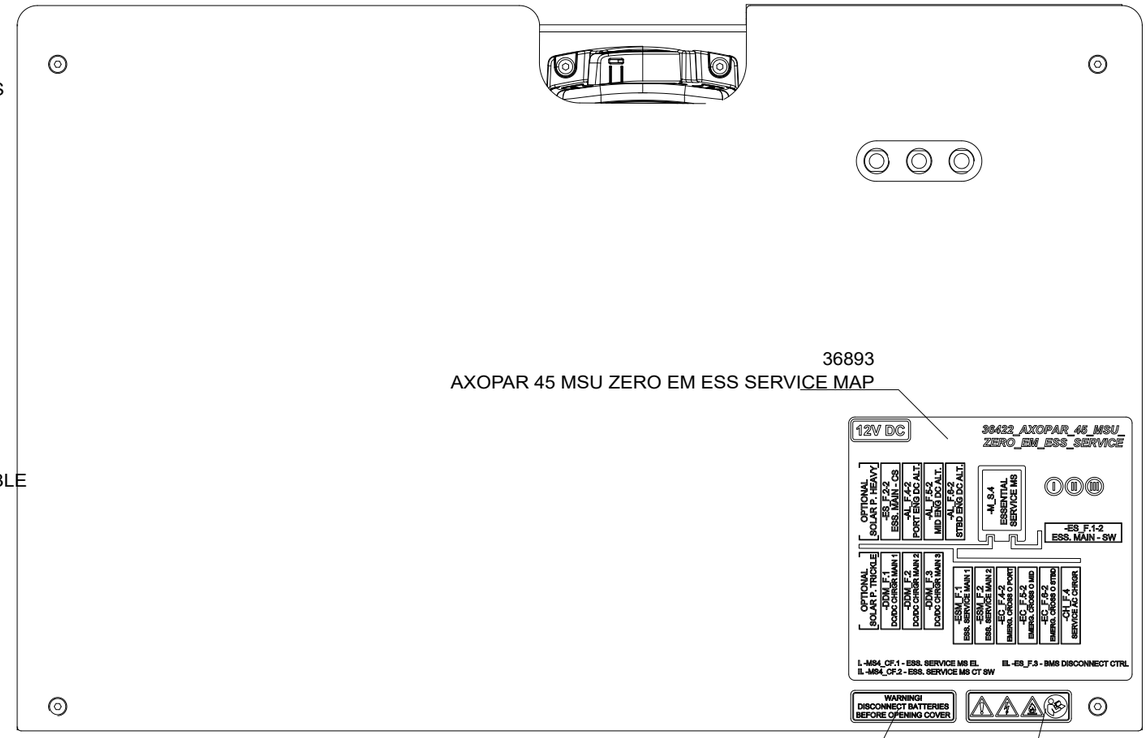

36893
AXOPAR 45 MSU ZERO EM ESS SERVICE MAP

36873
NAVIX LINE WARNING LABEL FOR COVER

36874
NAVIX LINE WARNING LABEL SYMBOLS

LABEL

Cable tie mount
VMI36559
+ CABLE TIE

CABLE TIE

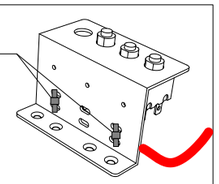

(ATTACHED TO 33383_NAVIX_LINE_MSU_FUSE_HOLDER)

WIRE TERMINALS

COPPER BAR

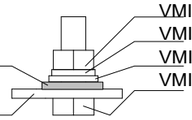

VMI32012 HEX NUT M8 DIN934
VMI32011 SPRING LOCK WASHER M8 DIN127
VMI32013 FLAT WASHER FOR HEX BOLT M8
VMI32018 HEX BOLT FULL THREAD M8X25 DIN933

Date of modification	Modified by	Description
28.6.2022	TuM	A1: 2003713; INTRODUCED DRAWING.
3.5.2023	RK	B1: 2004274; NOT MODIFIED.
29.5.2024	PF/TuM	C2: 2004890; V8 fuses moved to product 40364; 204998; MS_X4c REMOVED.

Date	28.6.2022
Drawing by	TuM
Sheet rev.	2
Project rev.	C

Copyright by

Axopar Boat	SEE EXP VIEW Sub-product code	36422 Product code		Project ID
45 Boat model	MSU ZERO EM. ESS. SERVICE Title	HL Loc	200 / 444 Sheet	

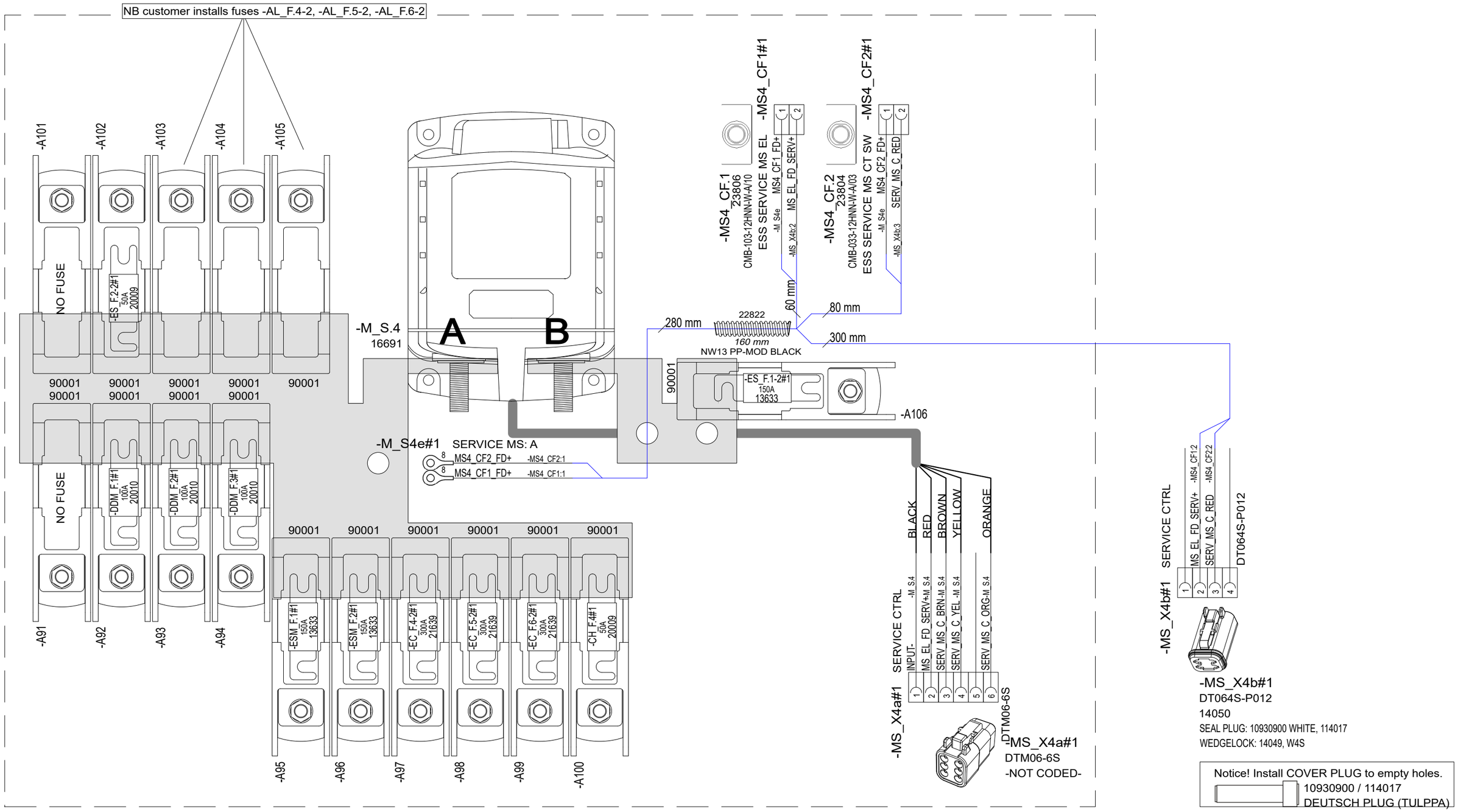

Date of modification	Modified by	Description
28.6.2022	TuM	A1: 2003713; INTRODUCED DRAWING.
3.5.2023	RK	B1: 2004274; NOT MODIFIED.
29.5.2024	PF/TuM	C2: 2004890; V8 fuses moved to product 40364; 204998; MS_X4c REMOVED.

Date	28.6.2022
Drawing by	TuM
Sheet rev.	2
Project rev.	C

NAVIX

Copyright by

Axopar	SEE EXP VIEW	36422	
Boat	Sub-product code	Product code	Project ID
45	MSU ZERO EM. ESS. SERVICE	HL	201/ 444
Boat model	Title	Loc	Sheet

EXP VIEW

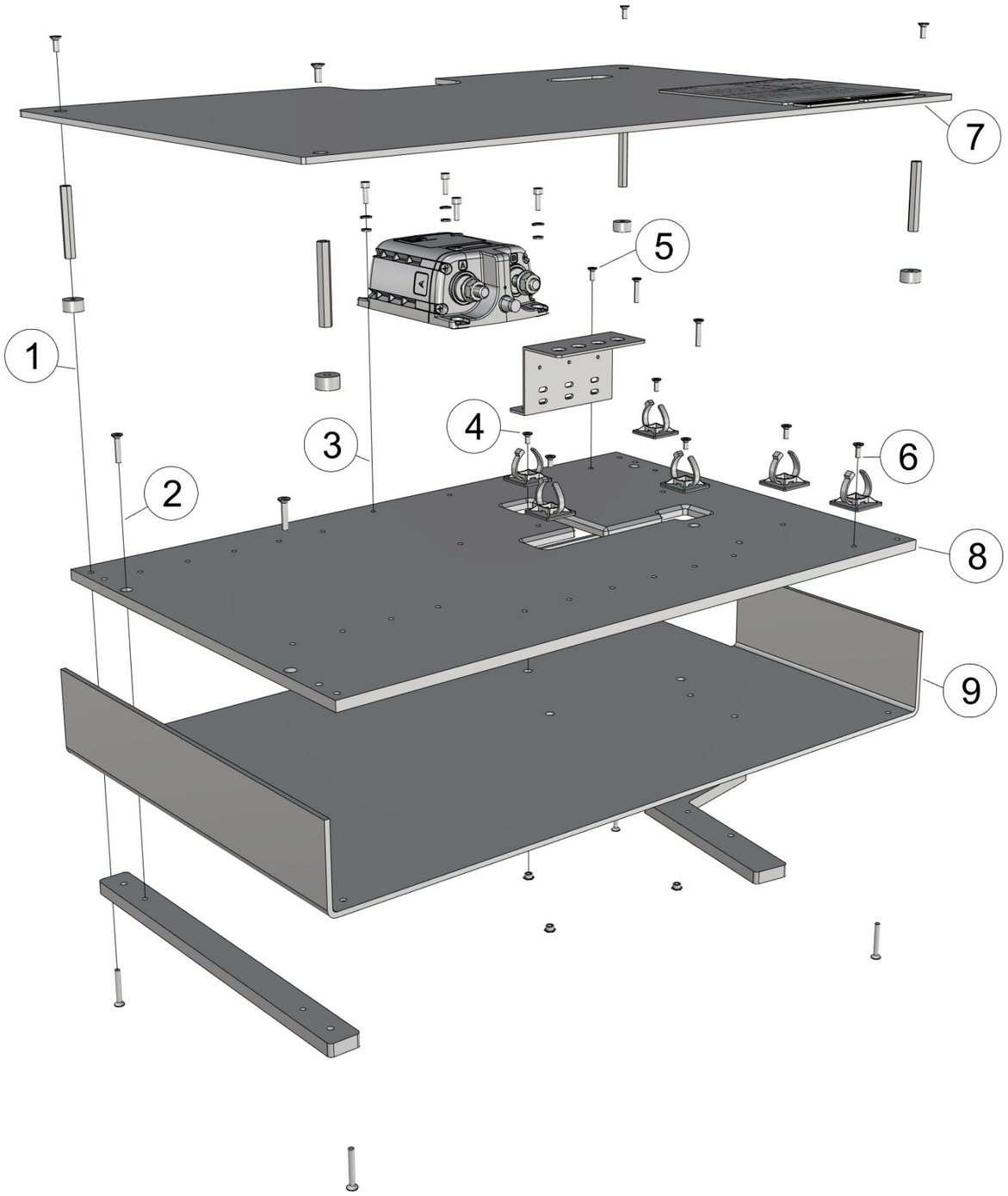

36422_AXOPAR_45_MSU_ZERO_EM_ESS_SERVICE

1. 4PCS VMI30914 COUNTERSUNK HEAD SCREW HEX SOCKET M4X10 DIN7991
   4PCS VMI32041 EXTENSION BOLT M4 L-50
   4PCS 29063_NAVIX_LINE_8MM_WASHER_V1
   4PCS VMI30920 COUNTERSUNK HEAD SCREW HEX SOCKET M4X30 DIN7991

2. 4PCS VMI30918 COUNTERSUNK HEAD SCREW HEX SOCKET M4X20 DIN7991
   1PC 36802_AXOPAR_45_MSU_ZERO_EM_ESS_SERVICE_RISER_SET_V1

3. 4PCS VMI30944 HEX SOCKET HEAD CAP SCREW M4X12 DIN912
   4PCS VMI30904 SPRING LOCK WASHER M4 DIN127
   4PCS VMI30906 FLAT WASHER FOR HEX BOLTS AND NUTS M4 DIN125A
   - MAIN SWITCH (AS IN DIAGRAM) -

4. 3PCS VMI30913 COUNTERSUNK HEAD SCREW HEX SOCKET M4X8 DIN7991
   - ZIPTIE AND -HOLDER (AS IN DIAGRAM) -
   3PCS 9872 ETSOS M4X4

5. 2PCS VMI30914 COUNTERSUNK HEAD SCREW HEX SOCKET M4X10 DIN7991
   1PC 33383_NAVIX_LINE_MSU_FUSE_HOLDER

6. 3PC VMI30914 COUNTERSUNK HEAD SCREW HEX SOCKET M4X10 DIN7991
   - ZIPTIE AND -HOLDER (AS IN DIAGRAM) -

7. 1PC 36799_AXOPAR_45_MSU_ZERO_EM_ESS_SERVICE_COVER_V1
   + LABELS (AS IN DIAGRAM)

8. 1PC 36800_AXOPAR_45_MSU_ZERO_EM_ESS_SERVICE_BASE_V1

9. 1PC 36801_AXOPAR_45_MSU_ZERO_EM_ESS_SERVICE_BACK_V1

Date of modification	Modified by	Description
28.6.2022	TuM	A1: 2003713; INTRODUCED DRAWING.
3.5.2023	RK	B1: 2004274; NOT MODIFIED.
29.5.2024	PF/TuM	C2: 2004890; V8 fuses moved to product 40364; 204998; MS_X4c REMOVED.

Date	28.6.2022
Drawing by	TuM
Sheet rev.	2
Project rev.	C

Copyright by

NAVIX

Axopar Boat	SEE EXP VIEW Sub-product code	36422 Product code	Project ID	
45 Boat model	MSU ZERO EM. ESS. SERVICE Title	HL Loc	202 / 444 Sheet	

EXP VIEW

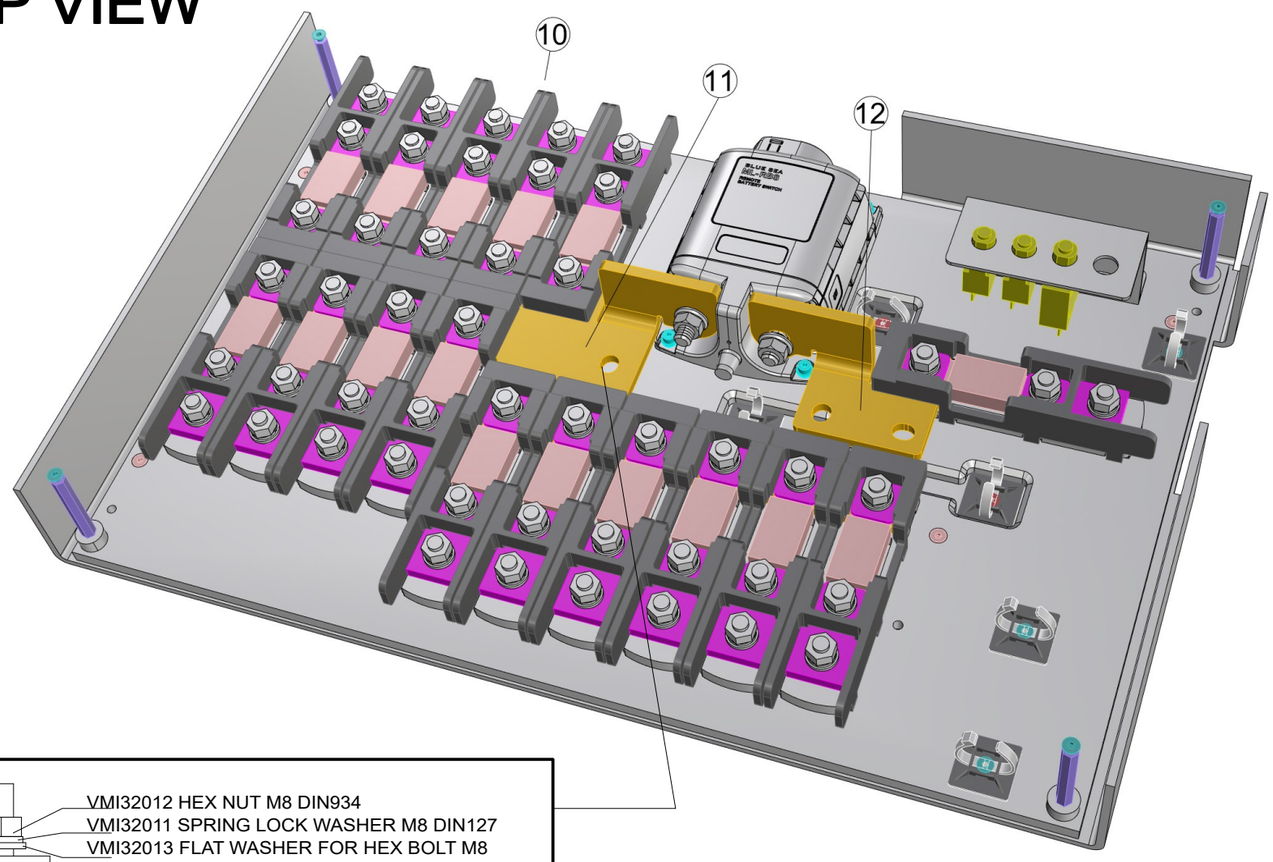

10. 16PCS 90001_NAVIX_LINE_ANL_HOLDER_TYPE5_V1

11. 1PC 36931_NAVIX_LINE_BUS_BAR_TYPE5C_LEFT_15X_V1

12. 1PC 36930_NAVIX_LINE_BUS_BAR_TYPE5_RIGHT_2X_UP_V1

1.6.2022 / TS

ASSEMBLED PANEL

(WITHOUT WIRING)

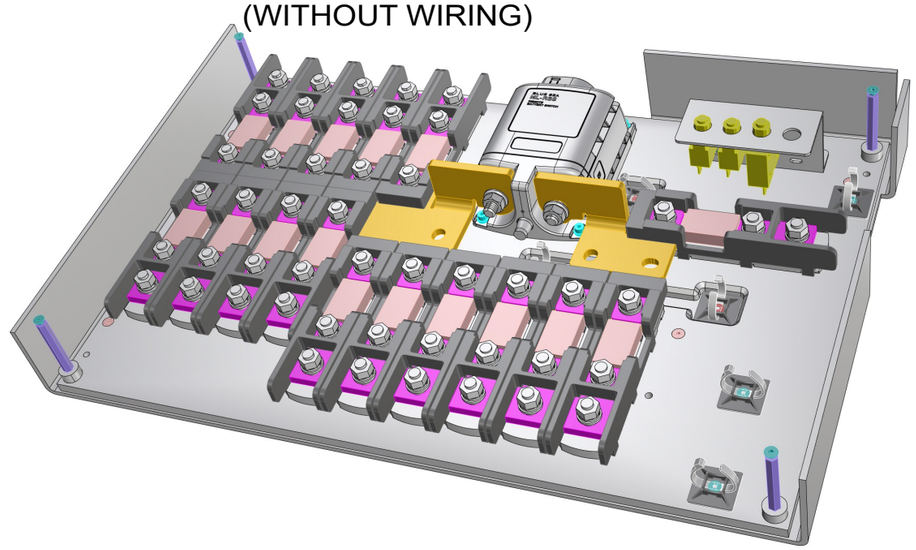

Date of modification	Modified by	Description
28.6.2022	TuM	A1: 2003713; INTRODUCED DRAWING.
3.5.2023	RK	B1: 2004274; NOT MODIFIED.
29.5.2024	PF/TuM	C2: 2004890; V8 fuses moved to product 40364; 204998; MS_X4c REMOVED.

Date	28.6.2022
Drawing by	TuM
Sheet rev.	2
Project rev.	C

Copyright by

Axopar Boat	SEE EXP VIEW Sub-product code	36422 Product code	Project ID
45 Boat model	MSU ZERO EM. ESS. SERVICE Title	HL Loc	203 / 444 Sheet

GENERAL LAYOUT & LABELS
WIRE ROUTES / CABLE TIES

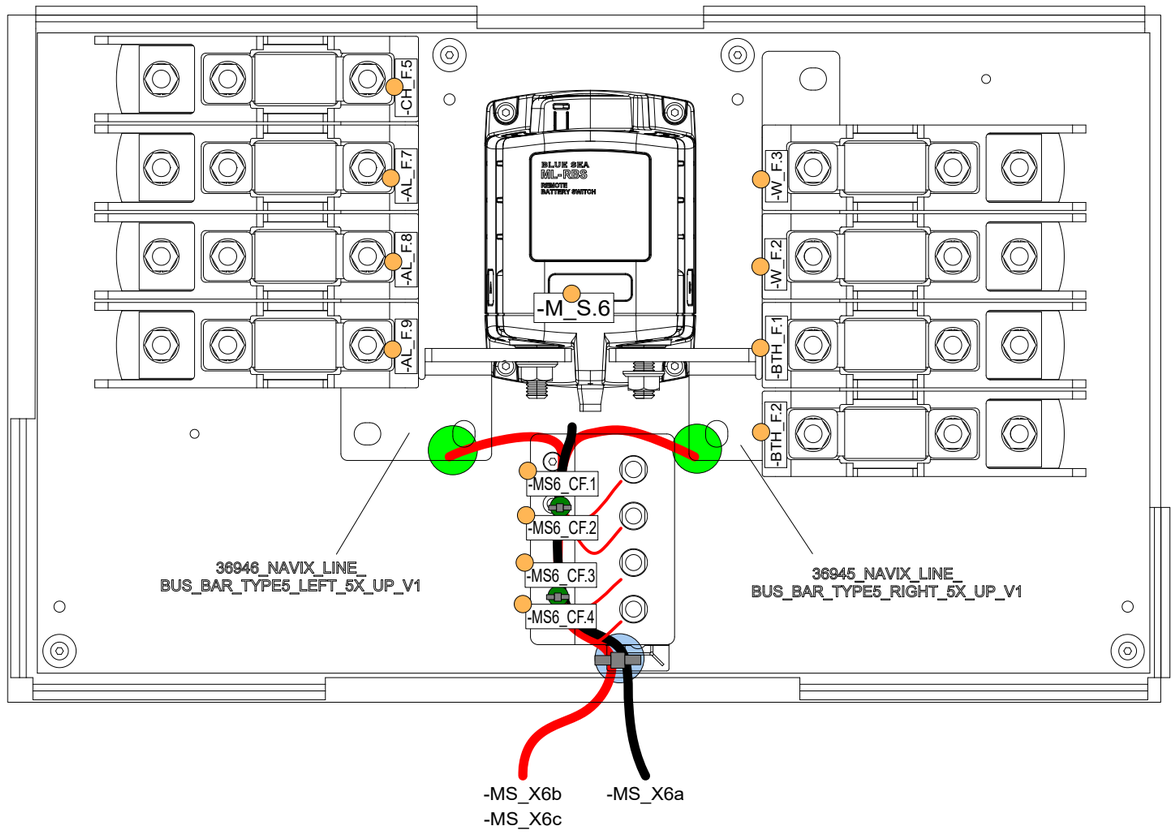

COVER LABEL INSTALLATION

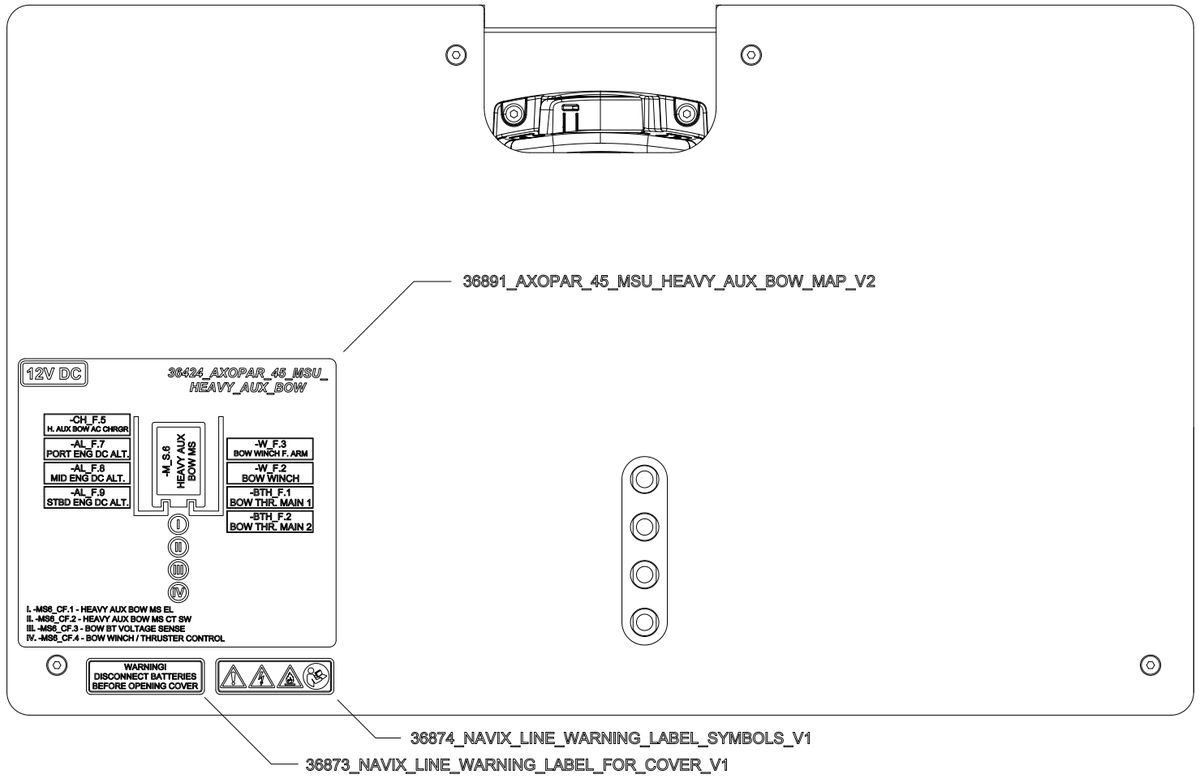

LABEL

Cable tie mount
VMI36559
+ CABLE TIE

CABLE TIE

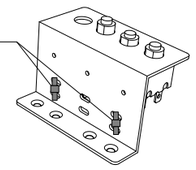

(ATTACHED TO 33383_NAVIX_LINE_MSU_FUSE_HOLDER)

WIRE TERMINALS

COPPER BAR

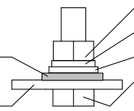

VMI32012 HEX NUT M8 DIN934
VMI32011 SPRING LOCK WASHER M8 DIN127
VMI32013 FLAT WASHER FOR HEX BOLT M8
VMI32018 HEX BOLT FULL THREAD M8X25 DIN933

Date of modification	Modified by	Description
1.7.2022	TuM	A1: 2003713; INTRODUCED DRAWING.
3.5.2023	RK	B2: 2004274; PANEL MODIFIED.
4.12.2023	PF	C3: 2004890; V8 fuses moved to product 40364

Date	1.7.2022
Drawing by	TuM
Sheet rev.	3
Project rev.	C

Copyright by

NAVIX

Axopar Boat	SEE EXP VIEW Sub-product code	36424 Product code		Project ID
45 Boat model	MSU HEAVY AUX BOW Title		HL Loc	204 / 444 Sheet

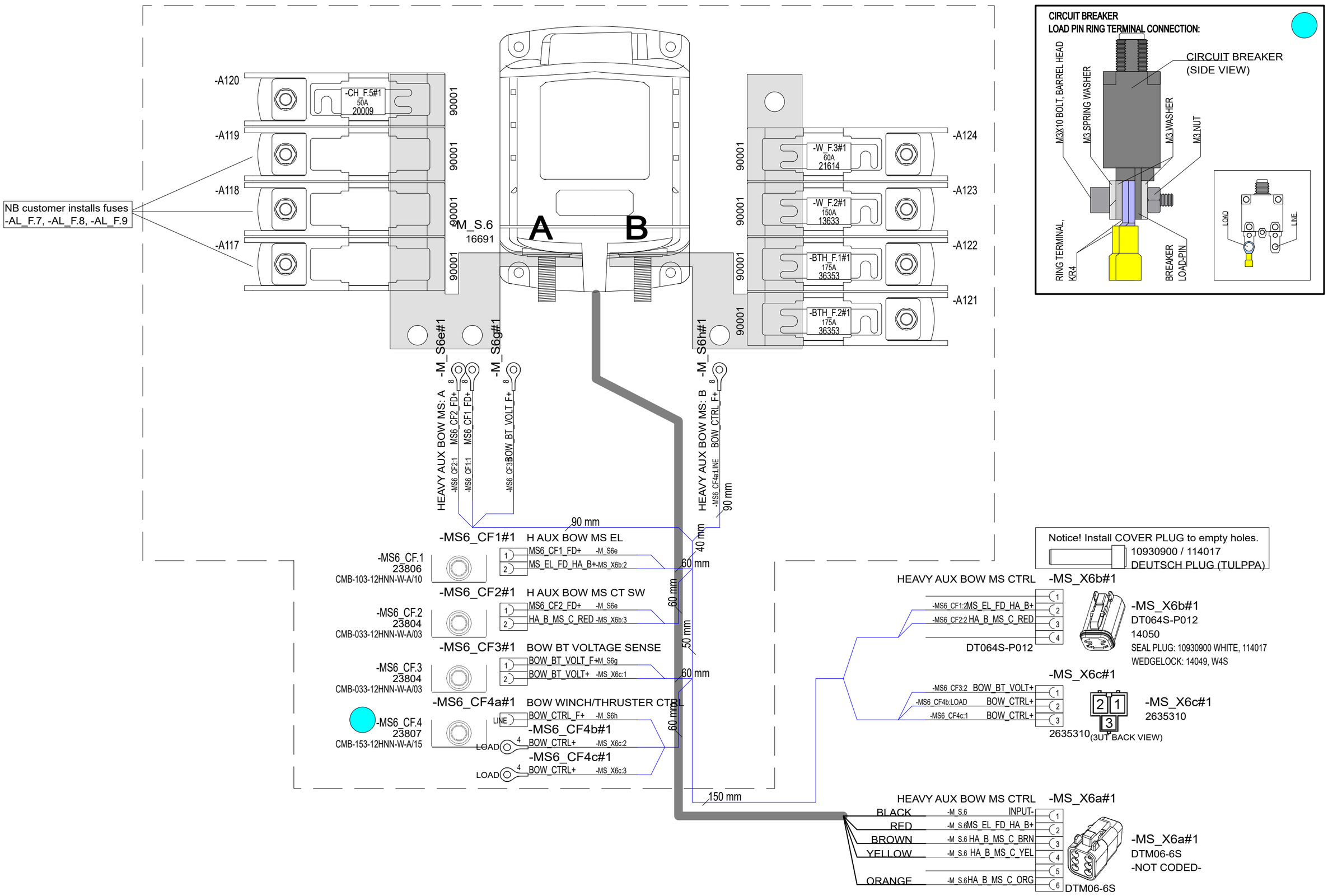

Date of modification	Modified by	Description
1.7.2022	TuM	A1: 2003713; INTRODUCED DRAWING.
3.5.2023	RK	B2: 2004274; PANEL MODIFIED.
4.12.2023	PF	C3: 2004890; V8 fuses moved to product 40364

Date	1.7.2022
Drawing by	TuM
Sheet rev.	3
Project rev.	C

Copyright by

Axopar	SEE EXP VIEW	36424		
Boat	Sub-product code	Product code	Project ID	
45	MSU HEAVY AUX BOW		HL	205 / 444
Boat model	Title		Loc	Sheet

EXP VIEW

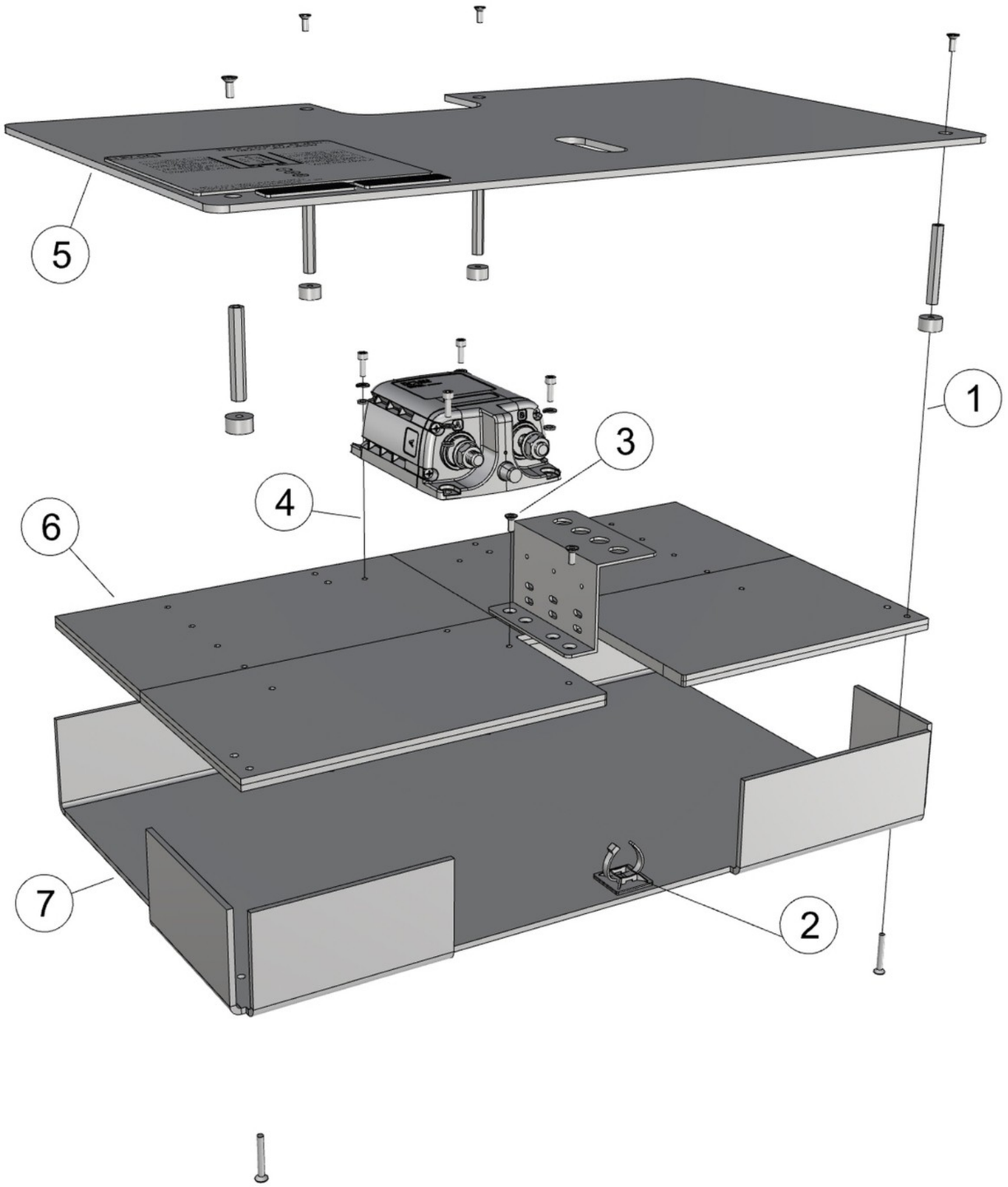

36424_AXOPAR_45_MSU_HEAVY_AUX_BOW

1. 4PCS VMI30914 COUNTERSUNK HEAD SCREW HEX SOCKET M4X10 DIN7991
   4PCS VMI32041 EXTENSION BOLT M4 L-50
   4PCS 29063_NAVIX_LINE_8MM_WASHER_V1
   4PCS VMI30920 COUNTERSUNK HEAD SCREW HEX SOCKET M4X30 DIN7991

2. 1PCS VMI36559 Self Adhesive Black Cable Tie Mount 5,3mm

3. 2PCS VMI30914 COUNTERSUNK HEAD SCREW HEX SOCKET M4X10 DIN7991
   1PC 33383_NAVIX_LINE_MSU_FUSE_HOLDER

4. 4PCS VMI30944 HEX SOCKET HEAD CAP SCREW M4X12 DIN912
   4PCS VMI30904 SPRING LOCK WASHER M4 DIN127
   4PCS VMI30906 FLAT WASHER FOR HEX BOLTS AND NUTS M4 DIN125A
 - MAIN SWITCH (AS IN DIAGRAM) -

5. 1PC 36796_AXOPAR_45_MSU_HA_BOW_COVER_V1
 + LABELS (AS IN DIAGRAM)

6. 1PC 36797_AXOPAR_45_MSU_HA_BOW_BASE_V1

7. 1PC 36798_AXOPAR_45_MSU_HA_BOW_BACK_V1

Date of modification	Modified by	Description
1.7.2022	TuM	A1: 2003713; INTRODUCED DRAWING.
3.5.2023	RK	B2: 2004274; PANEL MODIFIED.
4.12.2023	PF	C3: 2004890; V8 fuses moved to product 40364

Date	1.7.2022
Drawing by	TuM
Sheet rev.	3
Project rev.	C

Copyright by

NAVIX

Axopar Boat	SEE EXP VIEW Sub-product code	36424 Product code	Project ID	
45 Boat model	MSU HEAVY AUX BOW Title	HL Loc	206 / 444 Sheet	

EXP VIEW

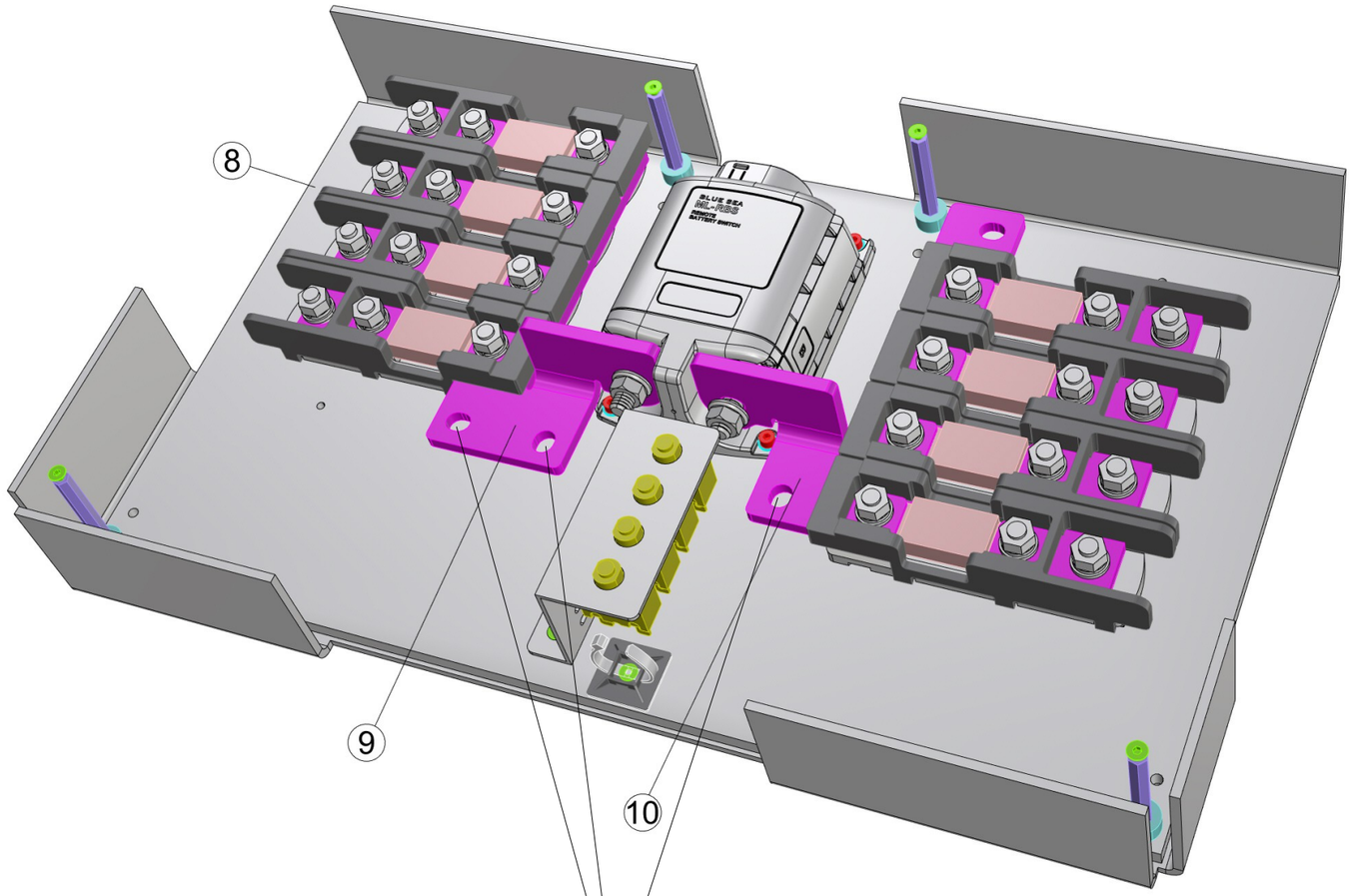

8. 8PCS 90001_NAVIX_LINE_ANL_HOLDER_TYPE5_V1

9. 1PC 36946_NAVIX_LINE_BUS_BAR_TYPE5_LEFT_5X_UP_V1

10. 1PC 36945_NAVIX_LINE_BUS_BAR_TYPE5_RIGHT_5X_UP_V1

1.6.2022 / TS

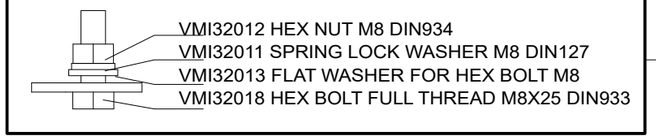

VMI32012 HEX NUT M8 DIN934
VMI32011 SPRING LOCK WASHER M8 DIN127
VMI32013 FLAT WASHER FOR HEX BOLT M8
VMI32018 HEX BOLT FULL THREAD M8X25 DIN933

ASSEMBLED PANEL

(WITHOUT WIRING)

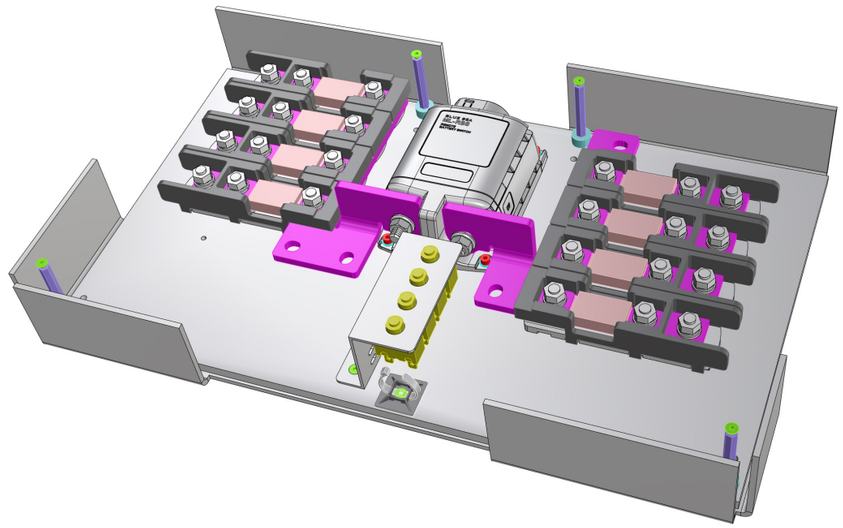

1.7.2022	TuM	A1: 2003713; INTRODUCED DRAWING.	Date 1.7.2022	NAVIX	Axopar	SEE EXP VIEW	36424	
3.5.2023	RK	B2: 2004274; PANEL MODIFIED.	Drawing by TuM		Boat	Sub-product code	Product code	Project ID
4.12.2023	PF	C3: 2004890; V8 fuses moved to product 40364	Sheet rev. 3		45	MSU HEAVY AUX BOW	HL	207 / 444
Date of modification	Modified by	Description	Project rev. C	Copyright by	Boat model	Title	Loc	Sheet

GENERAL LAYOUT & LABELS
WIRE ROUTES / CABLE TIES

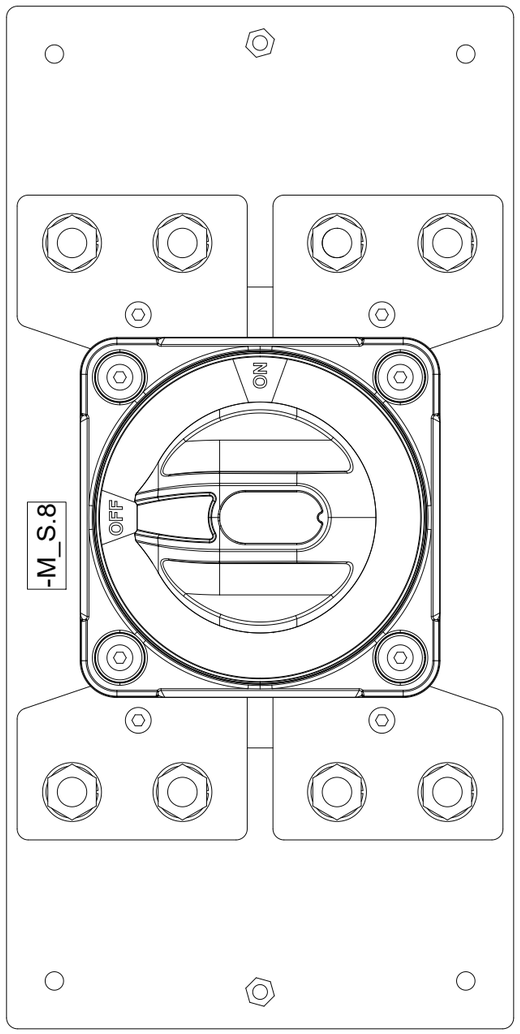

COVER LABEL INSTALLATION

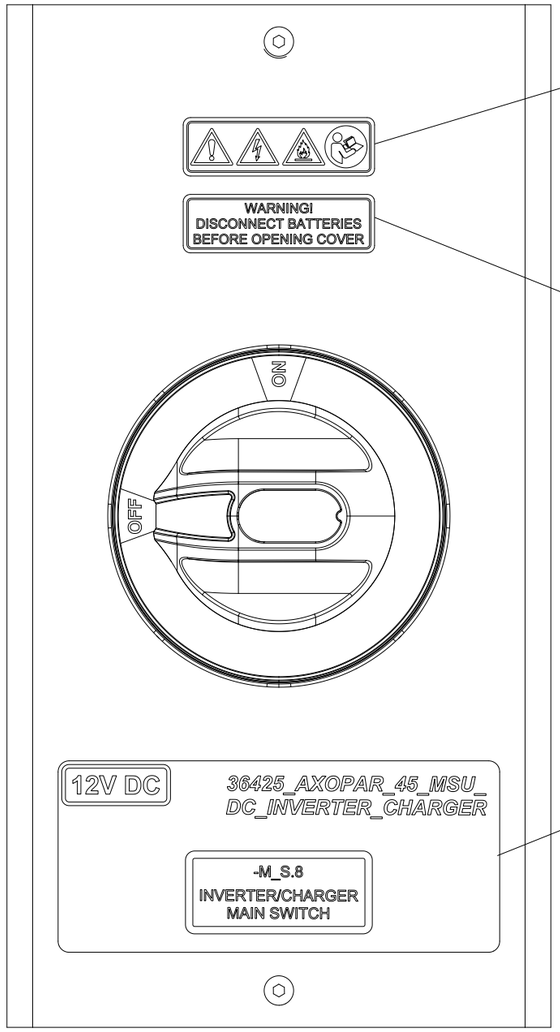

36874
NAVIX LINE WARNING LABEL SYMBOLS

36873
NAVIX LINE WARNING LABEL FOR COVER

37219
MSU DC INV CHRGR MAP

7.4.2022	TuM	A1: 2003713; INTRODUCED DRAWING.	Date 4.7.2022	NAVIX	Axopar	SEE EXP VIEW	36425	
3.5.2023	RK	B1: 2004274; NOT MODIFIED.	Drawing by TuM		Boat	Sub-product code	Product code	Project ID
6.6.2024	TuM	C1: 2005065; NOT MODIFIED.	Sheet rev. 1		45	MSU DC INVERTER/CHARGER	HL	208 / 444
Date of modification	Modified by	Description	Project rev. C	Copyright by	Boat model	Title	Loc	Sheet

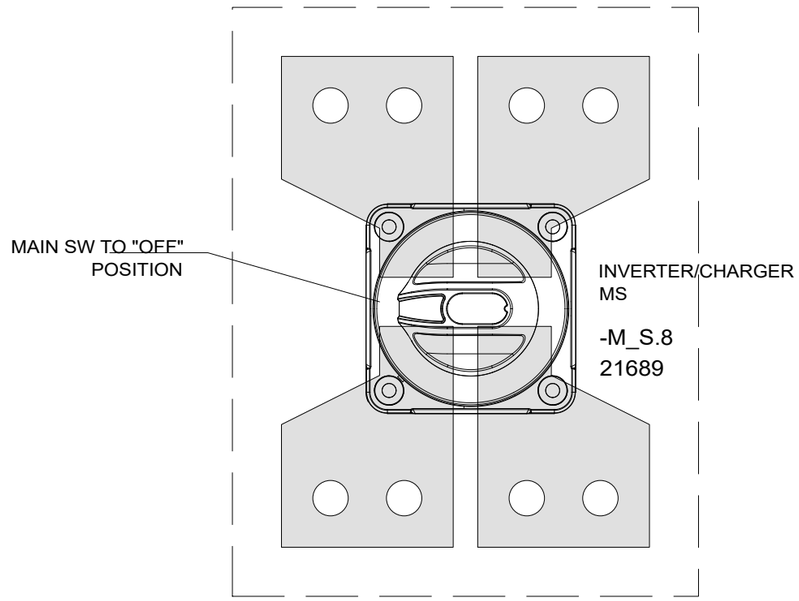

1.7.2022	TuM	A1: 2003713; INTRODUCED DRAWING.	Date 1.7.2022	Copyright by	Axopar Boat	SEE EXP VIEW Sub-product code	36425 Product code	Project ID
3.5.2023	RK	B1: 2004274; NOT MODIFIED.	Drawing by TuM					
6.6.2024	TuM	C1: 2005065; NOT MODIFIED.	Sheet rev. 1		45 Boat model	MSU DC INVERTER/CHARGER Title	HL Loc	209 / 444 Sheet
Date of modification	Modified by	Description	Project rev. C					

EXP VIEW

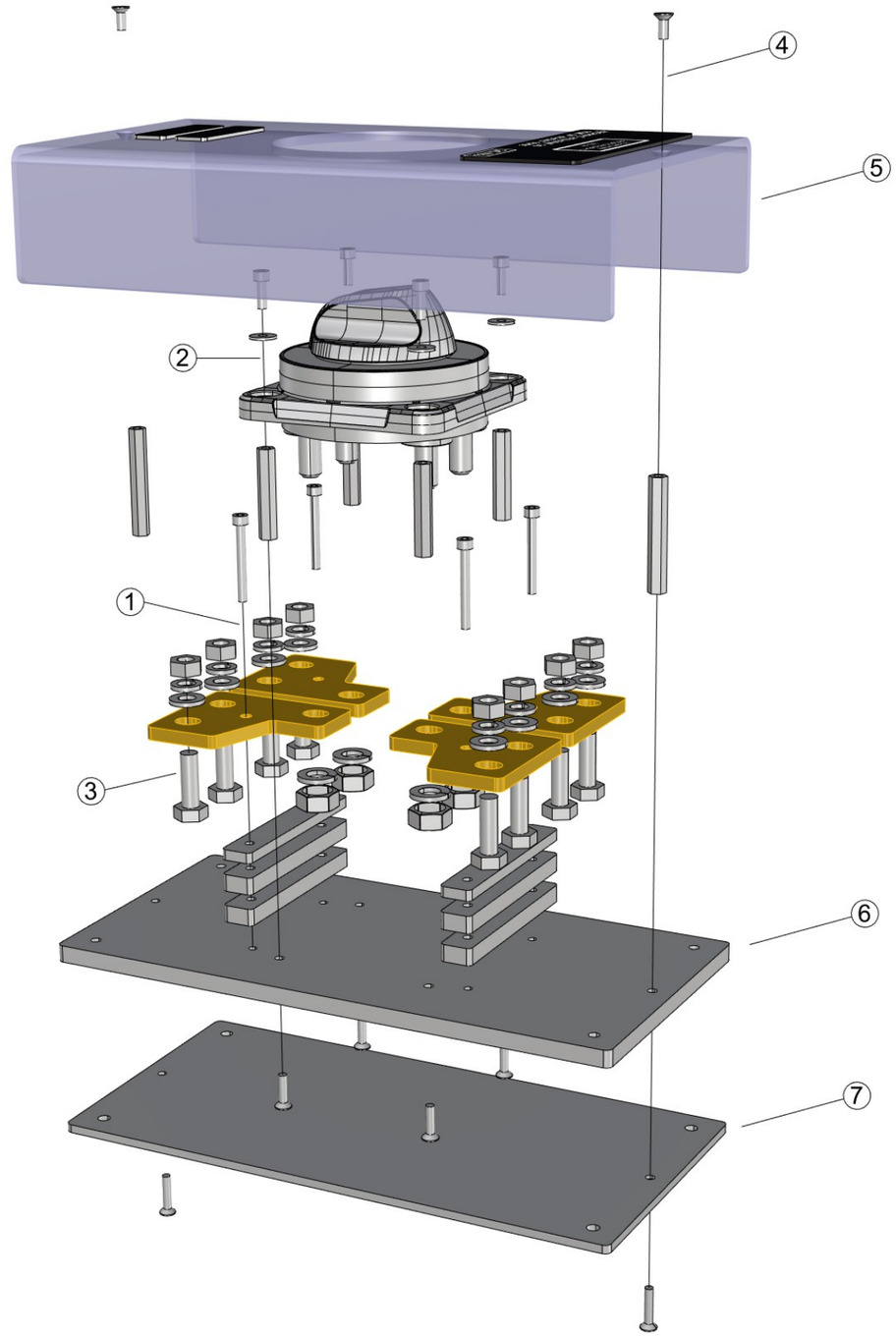

36425_AXOPAR_45_MSU_DC_INVERTER_CHARGER

1. 4PCS VMI30948 HEX SOCKET HEAD CAP SCREW M4X35 DIN912
   4PCS 36976_NAVIX_LINE_LINKBAR_BEP_2X_V1
   2PCS 36819_AXOPAR_45_MSU_DC_INV_CHRGR_RISER_5MM_V1
   4PCS 36818_AXOPAR_45_MSU_DC_INV_CHRGR_RISER_8MM_V1

2. 4PCS VMI30944 HEX SOCKET HEAD CAP SCREW M4X12 DIN912
   4PCS VMI30907 M4 WASHER WITH LARGE OUTSIDE DIAMETER 12MM DIN9021

   1PCS MAIN SWITCH (AS IN DIAGRAM)
   ! WITHOUT BOTTOM !

   4PCS VMI32040 EXTENSION BOLT M4 L-40
   4PCS VMI30917 COUNTERSUNK HEAD SCREW HEX SOCKET M4X16 DIN7991

3. 8PCS VMI32018 HEX BOLT FULL THREAD M8X25 DIN933
   8PCS VMI32013 FLAT WASHER FOR HEX BOLTS AND NUTS M8 DIN125A
   8PCS VMI32011 SPRING LOCK WASHER M8 DIN127
   8PCS VMI32012 HEX NUT M8 DIN934

4. 2PCS VMI30914 COUNTERSUNK HEAD SCREW HEX SOCKET M4X10 DIN7991
   2PCS VMI32041 EXTENSION BOLT M4 L-50
   2PCS VMI30918 COUNTERSUNK HEAD SCREW HEX SOCKET M4X20 DIN7991

5. 1PC 36815_AXOPAR_45_MSU_DC_INV_CHRGR_COVER_V1
   + LABELS (AS IN DIAGRAM)

6. 1PC 36816_AXOPAR_45_MSU_DC_INV_CHRGR_BASE_V1

7. 1PC 36817_AXOPAR_45_MSU_DC_INV_CHRGR_BACK_V1

4.7.2022 / TS

Date of modification	Modified by	Description
1.7.2022	TuM	A1: 2003713; INTRODUCED DRAWING.
3.5.2023	RK	B1: 2004274; NOT MODIFIED.
6.6.2024	TuM	C1: 2005065; NOT MODIFIED.

Date	1.7.2022
Drawing by	TuM
Sheet rev.	1
Project rev.	C

Copyright by

Axopar Boat	SEE EXP VIEW Sub-product code	36425 Product code		Project ID
45 Boat model	MSU DC INVERTER/CHARGER Title		HL Loc	210 / 444 Sheet

GENERAL LAYOUT/ LABEL INSTALLATION

NOTICE!
VERIFY THAT ALL CABLES HAVE MARKINGS
SHOWN IN EXAMPLE BELOW.

EXEMPTION:
ALL <500mm WIRES AND BLACK WIRES
THIS MARKING IS NOT NEEDED.



EXAMPLE: RED 1,5mm2 WIRE MARKINGS.

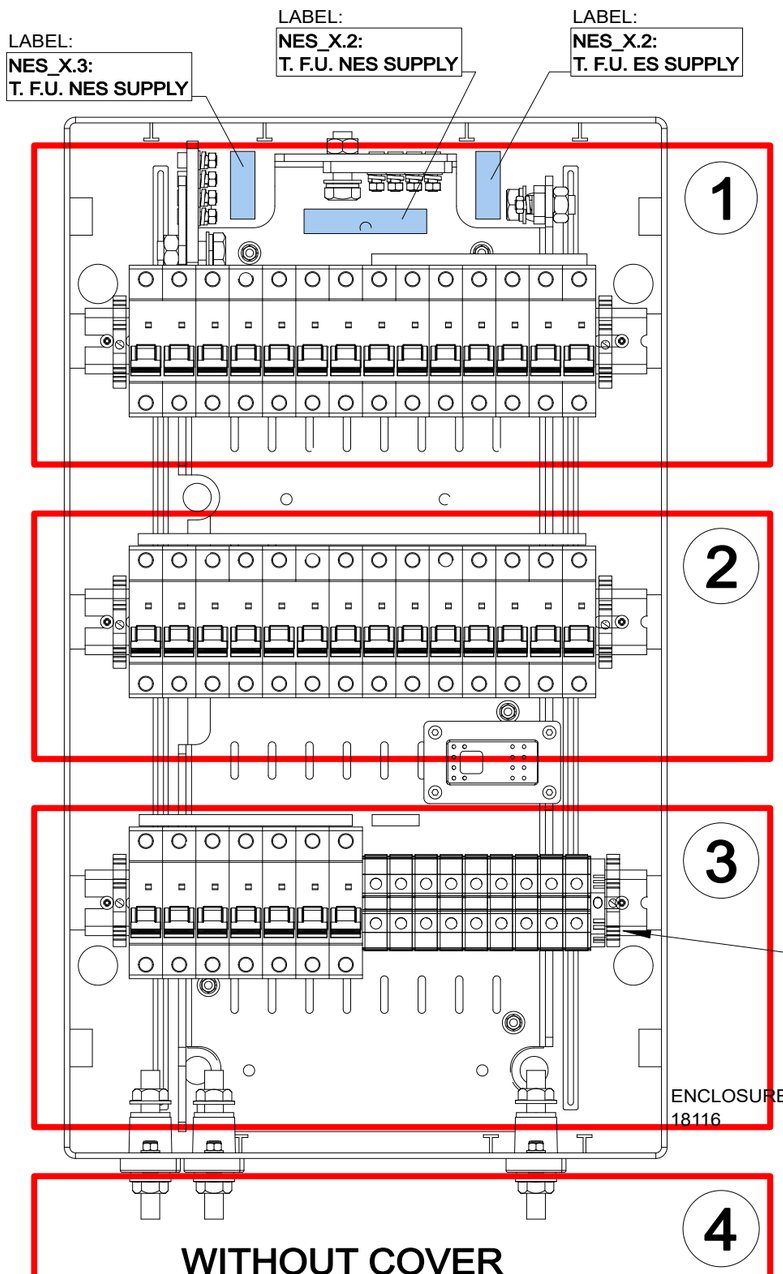

ADD LABEL TO CIRCUIT BREAKERS

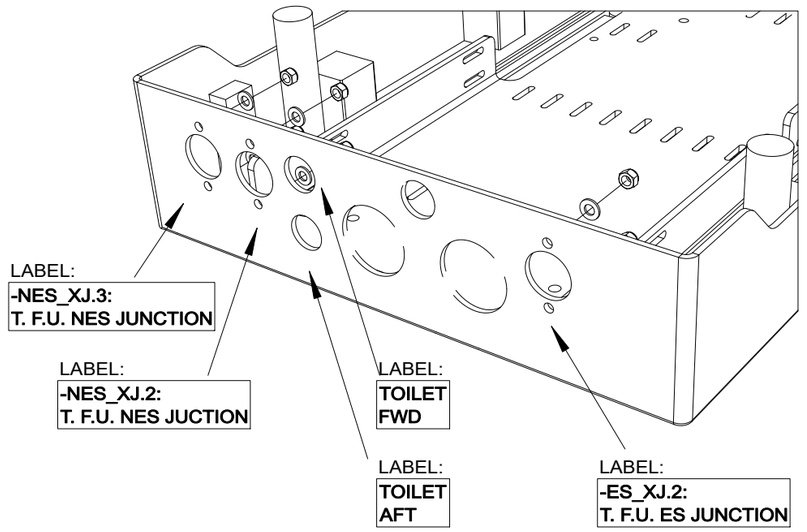

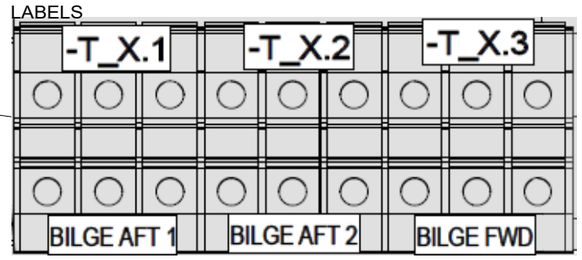

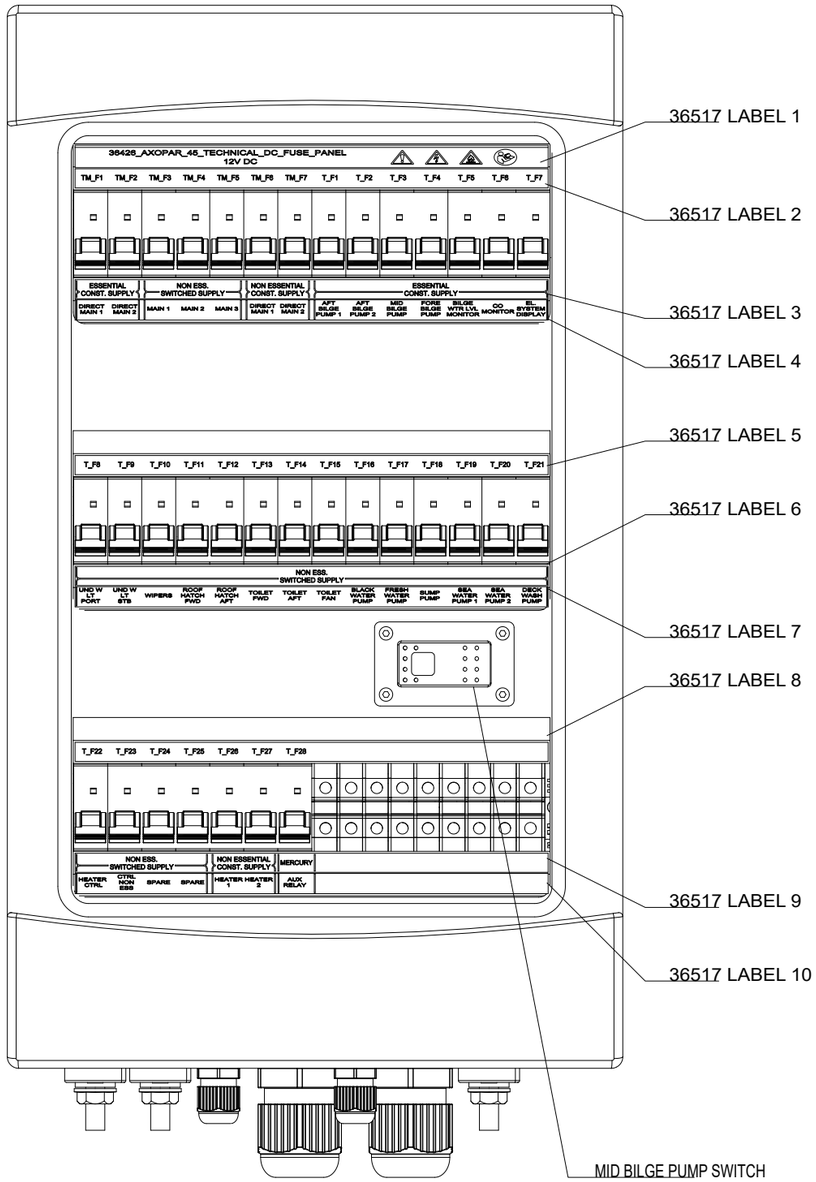

WITH COVER

17.2.2022	TuM	A1: 2003713; INTRODUCED DRAWING.	Date 17.2.2022	NAVIX	Axopar	SEE EXP VIEW	36426	
10.5.2023	VR	B2: 2004274; ADDED -BLS.1 SWITCH AND CONNECTORS -FX2a-h	Drawing by TuM		Boat	Sub-product code	Product code	Project ID
9.11.2023	PF/TuM	C3: 2004890; Added end clamps; 2005065; 41502 Busbar end pieces added.	Sheet rev. 3		45	TECHNICAL DC FUSE PANEL	HL	211/ 444
Date of modification	Modified by	Description	Project rev. C	Copyright by	Boat model	Title	Loc	Sheet

1

-NES_X3b#1 NES_X3: T. F.U. NES SPLY
5 NES_DIRECT_F+ -TM_F6a:1 10 RED
10/5
-NES_X3c#1 NES_X3: T. F.U. NES SPLY
5 NES_DIRECT_F+ -TM_F7a:1 10 RED
10/5
-NES_X3a#1
35/10
-NES_X3
-NES_X3a:1 NES_MAIN_CS+ 10
450 mm
35 BT-SK RED
VMI33316
400 mm PVC 16
/213.A1

-NES_X2a#1
95/10L
-NES_X2b:NES_MAIN_2_SW+ 10
500 mm
95 BT-SK RED
/213.A1

-NES_X.2

CONNECTION DETAIL
-NES_X2b
-NES_X2c
-NES_X2d
-NES_X2a
-NES_X.2

-NES_X2b#1
5 NES_INPUT_F+ -TM_F3a:1 NES_X2: T. F.U. NES SPLY 16 RED
16/5
-NES_X2c#1
5 NES_INPUT_F+ -TM_F4a:1 NES_X2: T. F.U. NES SPLY 16 RED
16/5
-NES_X2d#1
5 NES_INPUT_F+ -TM_F5a:1 NES_X2: T. F.U. NES SPLY 16 RED
16/5

200 mm
220 mm
330 mm

-TM_F1a#1 ES DIRECT MAIN 1 ES_DIRECT_F+ -ES_X2b:1 10 RED WES_10
-TM_F2a#1 ES DIRECT MAIN 2 ES_DIRECT_F+ -ES_X2c:1 10 RED WES_10
-TM_F3a#1 NES SWITCHED MAIN 1 NES_INPUT_F+ -NES_X2b:1 16 RED WES_16
-TM_F4a#1 NES SWITCHED MAIN 2 NES_INPUT_F+ -NES_X2c:1 16 RED WES_16
-TM_F5a#1 NES SWITCHED MAIN 3 NES_INPUT_F+ -NES_X2d:1 16 RED WES_16
-TM_F6a#1 NES DIRECT MAIN 1 NES_DIRECT_F+ -NES_X3b:1 10 RED WES_10
-TM_F7a#1 NES DIRECT MAIN 2 NES_DIRECT_F+ -NES_X3c:1 10 RED WES_10

-A223
2005.2
3232539 -TM_F.1#1 25A
3232539 -TM_F.2#1 25A
12848 -TM_F.3#1 50A
12848 -TM_F.4#1 50A
12848 -TM_F.5#1 50A
3232539 -TM_F.6#1 25A
3232539 -TM_F.7#1 25A

ES DIRECT MAIN 1 -TM_F1b#1 ES_DIRECT+ WES_10 -T_F2a:1
ES DIRECT MAIN 2 -TM_F2b#1 ES_DIRECT+ WES_10 -T_F6e:1
NES SWITCHED MAIN 1 -TM_F3b#1 NES_INPUT+ WES_16 -T_F12a:1
NES SWITCHED MAIN 2 -TM_F4b#1 NES_INPUT+ WES_16 -T_F17a:1
NES SWITCHED MAIN 3 -TM_F5b#1 NES_INPUT+ WES_16 -T_F24a:1
NES DIRECT MAIN 1 -TM_F6b#1 NES_DIRECT+ WES_10 -T_F26a:1
NES DIRECT MAIN 2 -TM_F7b#1 NES_DIRECT+ WES_10 -T_F27a:1

/213.A3
/213.A4
/213.A1
/213.A2
/213.A2

310 mm
41502 END PIECE
-T_F2a#1 AFT BILGE PUMP 2 ES_DIRECT+ -TM_F1b:1 10 RED WES_10
370 mm
-T_F6a#1 CO MONITOR ES_DIRECT+ -TM_F2b:1 10 RED WES_10
3232901
Busbar G-1L-1000/16 80A
16 mm2
41502 END PIECE

-A224
2005.2
10288 -T_F.1#1 6A
10288 -T_F.2#1 6A
10288 -T_F.3#1 6A
10288 -T_F.4#1 6A
3232535 -T_F.5#1 10A
10288 -T_F.6#1 6A
10288 -T_F.7#1 6A

AFT BILGE PUMP 1 -T_F1b#1 -TX1a:1,-TX1b:1 AFT_BLG_1_S/A WES_T6
AFT BILGE PUMP 2 -T_F2b#1 -TX2b:1,-TX2a:1 AFT_BLG_2_S/A WES_T6
MID BILGE PUMP -T_F3b#1 -SX3:1,-SX3:2 MID_BLG_P WES_T6
FORE BILGE PUMP -T_F4b#1 -TX3a:1,-TX3b:1 FORE_BLG_S/A WES_T6
BILGE WATER LVL MONITOR -T_F5b#1 -FX2e:1,-FX2e2 BLG_WATER_L_SW WES_T2.5
CO MONITOR -T_F6b#1 -FX2e4,-FX2e3 CO_MONITOR+ WES_T1.5
EL SYSTEM DISPLAY -T_F7b#1 -FX2e5 EL_SYS_DISPL+ WES_1.5
450 mm
/215.B5

ES_X2: T. F.U. ES SUPPLY -ES_X2b#1
10 RED -TM_F1a:1 ES_DIRECT_F+ 5
10/5
ES_X2: T. F.U. ES SUPPLY -ES_X2c#1
10 RED -TM_F2a:1 ES_DIRECT_F+ 5
10/5

-ES_X2a#1
35/10
-ES_X2b:1 ES_MAIN_CS+ 10
450 mm
35 BT-SK RED
/213.A6

-ES_X.2

SUPPLY CABLE ROUTING

17.2.2022	TuM	A1: 2003713; INTRODUCED DRAWING.	Date 17.2.2022	NAVIX	Axopar	SEE EXP VIEW	36426
10.5.2023	VR	B2: 2004274; ADDED -BLS.1 SWITCH AND CONNECTORS -FX2a-h	Drawing by TuM		Boat	Sub-product code	Product code
9.11.2023	PF/TuM	C3: 2004890; Added end clamps; 2005065; 41502 Busbar end pieces added.	Sheet rev. 3		45	TECHNICAL DC FUSE PANEL	HL
Date of modification	Modified by	Description	Project rev. C	Copyright by	Boat model	Title	Loc

Project ID

212 / 444
Sheet

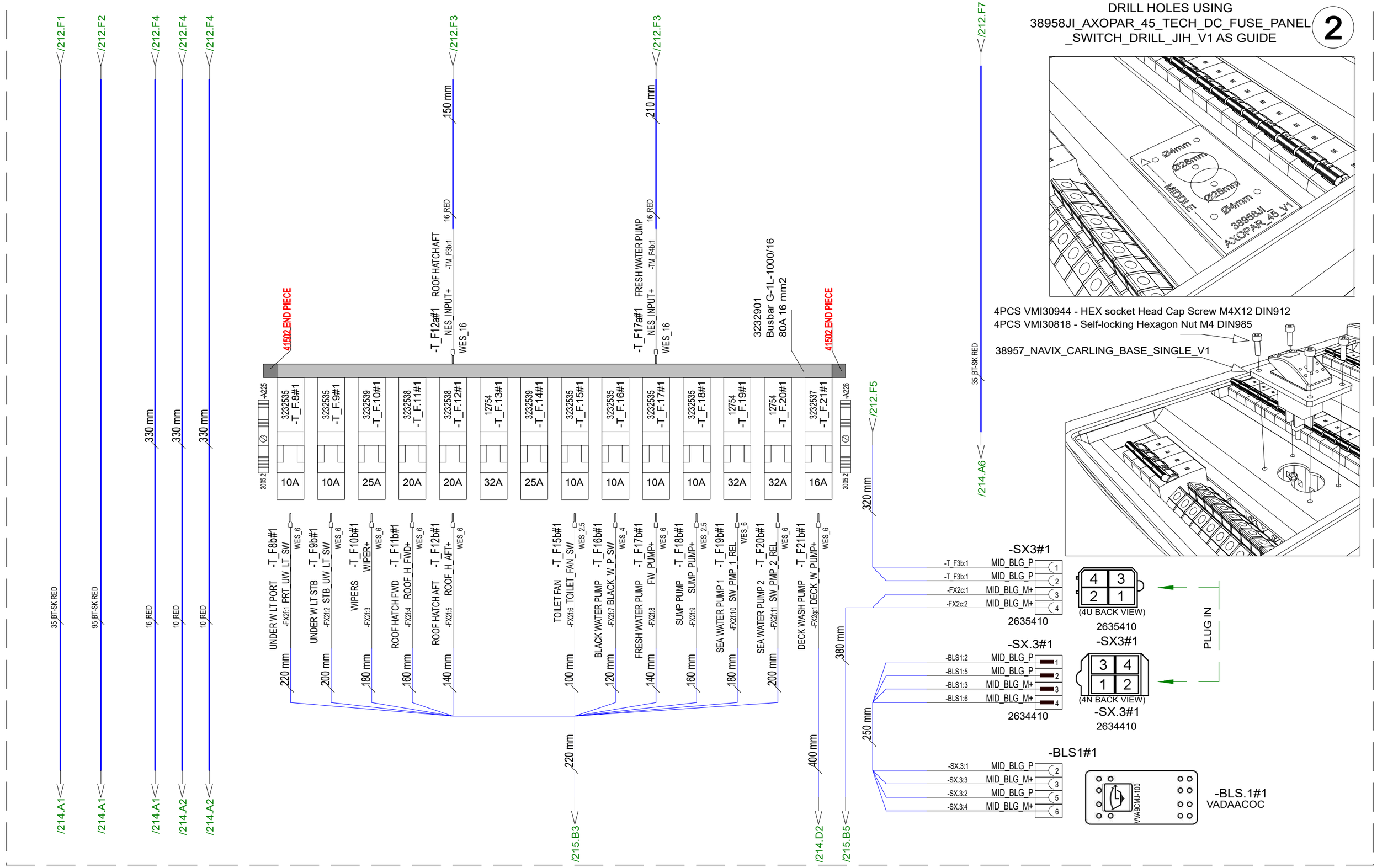

DRILL HOLES USING
38958JI_AXOPAR_45_TECH_DC_FUSE_PANEL
_SWITCH_DRILL_JIH_V1 AS GUIDE

2

4PCS VMI30944 - HEX socket Head Cap Screw M4X12 DIN912
4PCS VMI30818 - Self-locking Hexagon Nut M4 DIN985

38957_NAVIX_CARLING_BASE_SINGLE_V1

Date of modification	Modified by	Description						
17.2.2022	TuM	A1: 2003713; INTRODUCED DRAWING.	Date	17.2.2022	NAVIX	Axopar	SEE EXP VIEW	36426	Project ID
10.5.2023	VR	B2: 2004274; ADDED -BLS.1 SWITCH AND CONNECTORS -FX2a-h	Drawing by	TuM		Boat	Sub-product code	Product code	
9.11.2023	PF/TuM	C3: 2004890; Added end clamps; 2005065; 41502 Busbar end pieces added.	Sheet rev.	3		45	TECHNICAL DC FUSE PANEL	HL	213 / 444
			Project rev.	C	Copyright by	Boat model	Title	Loc	Sheet

/213.F1
/213.F1
/213.F1
/213.F2
/213.F2
/212.F4
/212.F5
/212.F5
/213.D6

35 BT-SK RED
95 BT-SK RED
35 BT-SK RED

-T_F24a#1 SPARE
NES_INPUT+ -TM_F5b:1
16 RED
WES_16

-T_F26a#1 HEATER 1
NES_DIRECT+ -TM_F6b:1
10 RED
WES_10

-T_F27a#1 HEATER 2
NES_DIRECT+ -TM_F7b:1
10 RED
WES_10

-T_F28a#1 MERCURY AUX REL
MERC_AUX_REL+ -FX2h:3
WES_4
41502 END PIECE

3232901
Busbar G-1L-1000/16 80A 16 mm2
41502 END PIECE

3232901
Busbar
41502 END PIECE

/213.F5

-A227
2005.2

10288 -T_F.22#1	3232535 -T_F.23#1	3232535 -T_F.24#1	3232535 -T_F.25#1	3232538 -T_F.26#1	3232538 -T_F.27#1	3232535 -T_F.28#1
6A	10A	10A	10A	20A	20A	10A

-NES_XJ3a#1
10 NES_MAIN_CS+ -NES_X3a:1
35/10L

-NES_XJ2b#1
10 NES_MAIN_2_SW+NES_X2a:1
95/10L

34880
34880
31588
31588

HEATER CONTROL -T_F22b#1
HEATER_C -FX2g:2
WES_1.5

CONTROL NON-ESSENTIAL -T_F23b#1
CONTROL_NES+ -FX2g:3,-FX2g:4
WES_T1.5

SPARE -T_F24b#1
S_TOP_IN -FX2h:4
WES_1.5

HEATER 1 -T_F26b#1
HEATER -FX2h:1
WES_6

HEATER 2 -T_F27b#1
HEATER -FX2h:2
WES_6

200 mm
100 mm
/215.B3
270 mm
150 mm
100 mm
/215.B4

380 mm

-TX1b#1
AFT_BLG_1_S/A -T_F1b:1
WES_6

-TX1a#1
AFT_BLG_1_S/A -T_F1b:1
WES_6

-TX2b#1
AFT_BLG_2_S/A -T_F2b:1
WES_6

-TX2a#1
AFT_BLG_2_S/A -T_F2b:1
WES_6

-TX3b#1
FORE_BLG_S/A -T_F4b:1
WES_6

-TX3a#1
FORE_BLG_S/A -T_F4b:1
WES_6

-TX.1 -TX.1 -TX.1
2153.0
1050.2 1050.2

-TX.2 -TX.2 -TX.2
2153.0
1050.2 1050.2

-TX.3 -TX.3 -TX.3
2153.0
1050.2 1050.2

-TX1e#1
AFT_BLG_1_S/A -FX2a:4,-FX2a:5
WES_T6

-TX1d#1
AFT_BLG_1_S/A -FX2a:2,-FX2a:3
WES_T6

-TX1c#1
AFT_BLG_1_S/A -FX2a:1
WES_1.5

-TX2e#1
AFT_BLG_2_S/A -FX2b:4,-FX2b:5
WES_T6

-TX2d#1
AFT_BLG_2_S/A -FX2b:2,-FX2b:3
WES_T6

-TX2c#1
AFT_BLG_2_S/A -FX2b:1
WES_1.5

-TX3e#1
FORE_BLG_S/A -FX2d:4,-FX2d:5
WES_T6

-TX3d#1
FORE_BLG_S/A -FX2d:2,-FX2d:3
WES_T6

-TX3c#1
FORE_BLG_S/A -FX2d:1
WES_1.5

200 mm
170 mm
200 mm
/215.B5
/215.B5
/215.B5

-A228
2005.2

-ES_XJ2b#1
10 ES_MAIN_CS+ -ES_X2a:1
35/10L

34880
31588

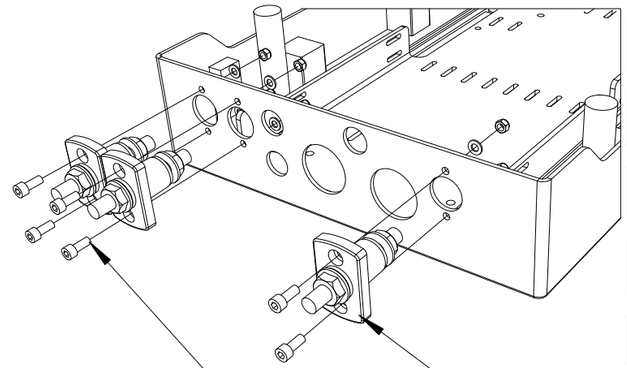

34880 - Terminal feed through 3/8" - 16 Stud Red - Blue Sea 2204B-BSS

6PCS VMI31816 - HEX Socket Head Cap Screw M5X12 DIN912

6PCS VMI31541 - Flat Washer for HEX bolts and nuts M5 DIN125A

6PCS VMI31539 - Self-locking HEX Nut M5 DIN985

Date of modification	Modified by	Description
17.2.2022	TuM	A1: 2003713; INTRODUCED DRAWING.
10.5.2023	VR	B2: 2004274; ADDED -BLS.1 SWITCH AND CONNECTORS -FX2a-h
9.11.2023	PF/TuM	C3: 2004890; Added end clamps; 2005065; 41502 Busbar end pieces added.

Date	17.2.2022
Drawing by	TuM
Sheet rev.	3
Project rev.	C

NAVIX
Copyright by

Axopar Boat	SEE EXP VIEW Sub-product code	36426 Product code	Project ID
45 Boat model	TECHNICAL DC FUSE PANEL Title	HL Loc	214 / 444 Sheet

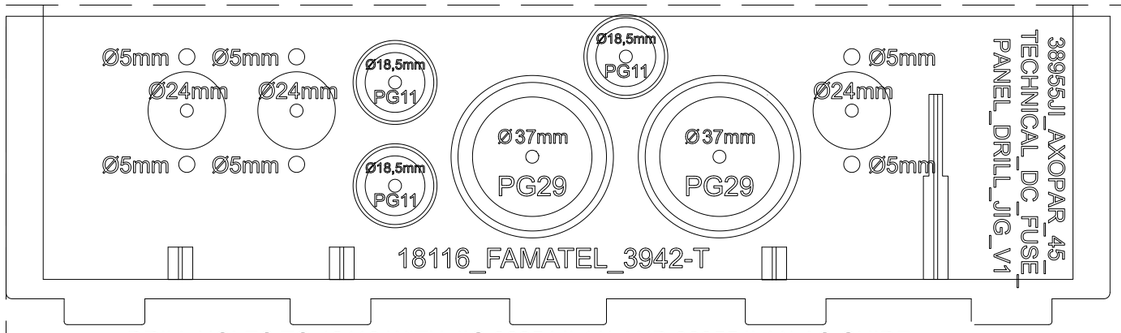

DRILL HOLES TO 18116 WITH JIG 38954JI_V1 AND 38955JI_V1 AS GUIDE

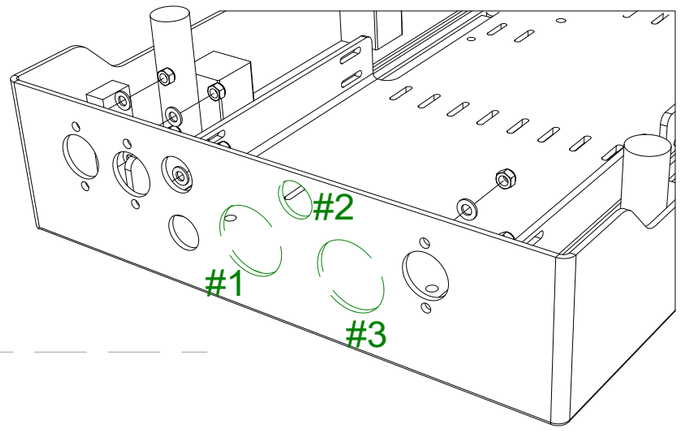

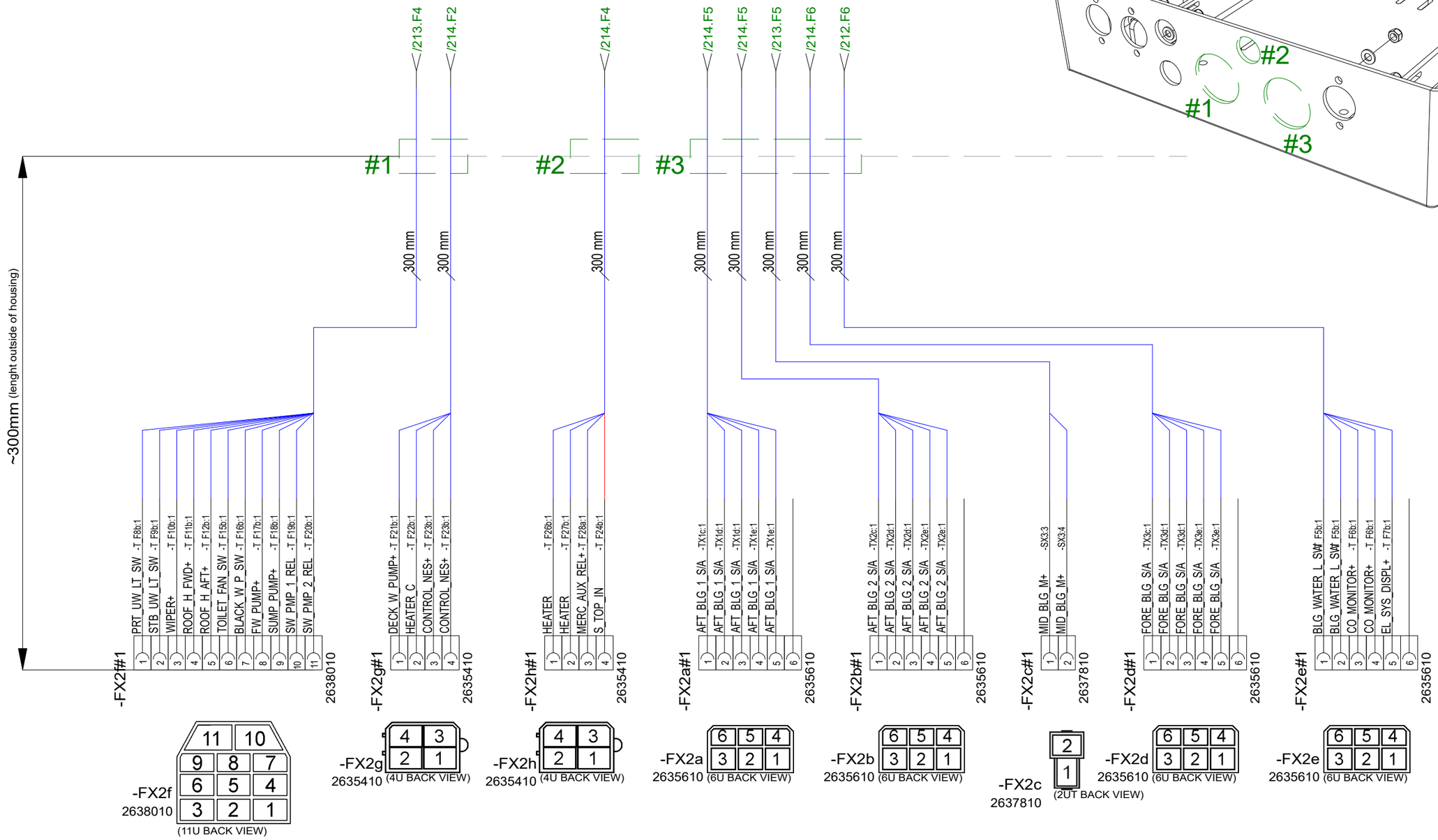

Date of modification	Modified by	Description
17.2.2022	TuM	A1: 2003713; INTRODUCED DRAWING.
10.5.2023	VR	B2: 2004274; ADDED -BLS.1 SWITCH AND CONNECTORS -FX2a-h
9.11.2023	PF/TuM	C3: 2004890; Added end clamps; 2005065; 41502 Busbar end pieces added.

Date	9.5.2023
Drawing by	TuM
Sheet rev.	3
Project rev.	C

NAVIX

Copyright by

Boat: Axopar	Sub-product code	Product code: 36426	Project ID
Boat model: 45	Title: TECHNICAL DC FUSE PANEL	HL	Loc
			Sheet: 215 / 444

EXP VIEW GENERAL

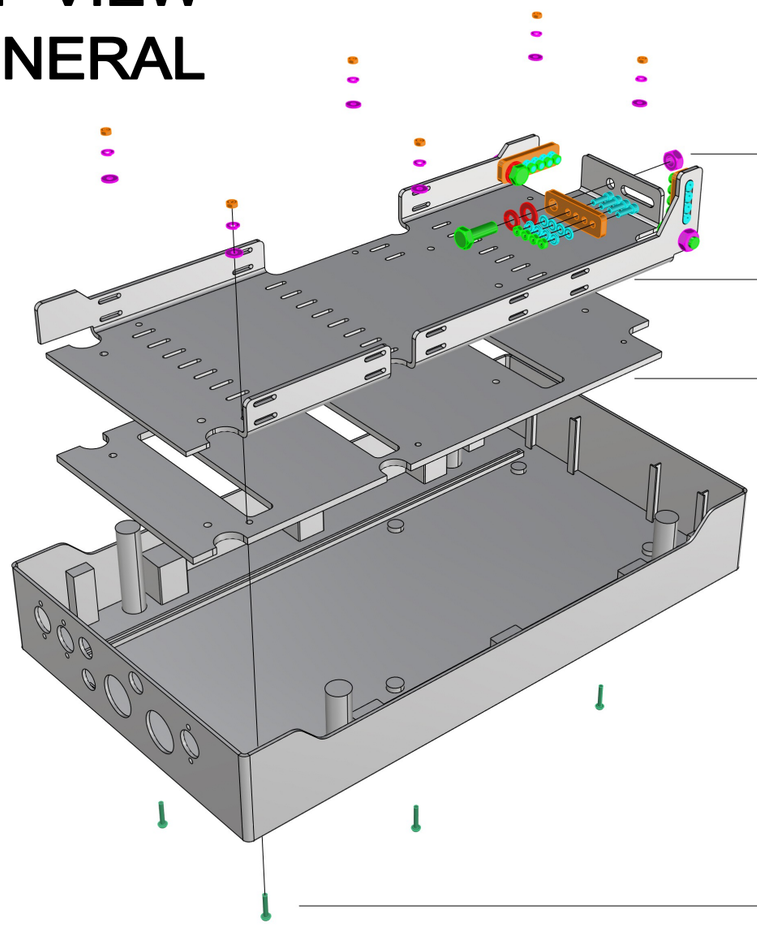

1.

36426_AXOPAR_45_TECHNICAL_DC_FUSE_PANEL

2. 1. 3PCS VMI32024 HEX BOLT FULL THREAD M10X30 DIN933
3PCS VMI32008 SPRING LOCK WASHER M10 DIN127
3PCS VMI32009 FLAT WASHER FOR HEX BOLTS AND NUTS M10 DIN125A
12PCS VMI31538 HEX NUT M5 DIN934
12PCS VMI31540 SPRING LOCK WASHER M5 DIN127

3. 12PCS VMI31541 FLAT WASHER FOR HEX BOLTS AND NUTS M5 DIN125A

3PCS 30167_NAVIX_LINE_VIRTAKISKO_FOUR_SPOT_SMALL

3PCS VMI32010 HEX NUT M10 DIN934
12PCS VMI31817 HEX SOCKET HEAD CAP SCREW M5X16 DIN912

2. 1PCS 36519_AXOPAR_45_TECH_DC_FUSE_PANEL_TOP_PLATE_V2

3. 1PCS 36518_AXOPAR_45_TECH_DC_FUSE_PANEL_BOT_PLATE_V2

4. ------- DRILL 5MM HOLES TO CASING. USE 36518 AS TEMPLATE. -------

6PCS VMI30910 PAN HEAD SCREW HEXALOBULAR HEAD TX20 M4X25 DIN7985
6PCS VMI30907 M4 WASHER WITH LARGE OUTSIDE DIAMETER 12MM DIN9021
6PCS VMI30904 SPRING LOCK WASHER M4 DIN127
6PCS VMI30905 HEX NUT M4 DIN934

17.02.2022 TS
3.5.2023 TS

2. DETAIL VIEW

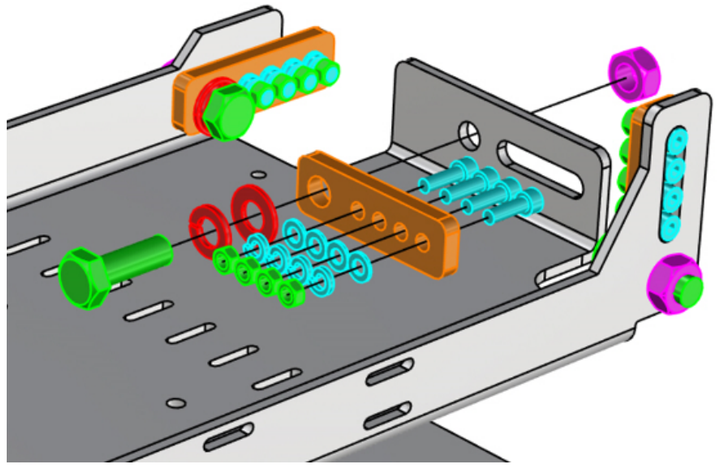

4.



5. 3PCS VMI32474 - PG11 Cable Gland
3PCS VMI32475 - PG11 Lock Nut
2PCS VMI32480 - PG29 Cable Gland
2PCS VMI32481 - PG29 Lock Nut

5.

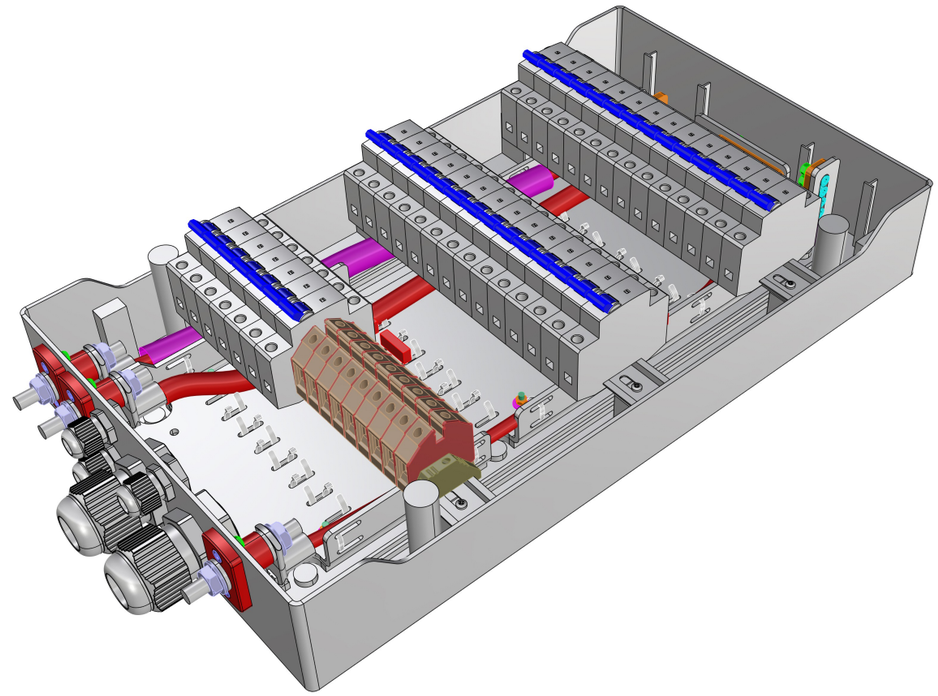

Date of modification	Modified by	Description						
17.2.2022	TuM	A1: 2003713; INTRODUCED DRAWING.	Date	17.2.2022	NAVIX	Axopar	SEE EXP VIEW	36426
10.5.2023	VR	B2: 2004274; ADDED -BLS.1 SWITCH AND CONNECTORS -FX2a-h	Drawing by	TuM		Boat	Sub-product code	Product code
9.11.2023	PF/TuM	C3: 2004890; Added end clamps; 2005065; 41502 Busbar end pieces added.	Sheet rev.	3		45	TECHNICAL DC FUSE PANEL	HL
			Project rev.	C	Copyright by	Boat model	Title	Loc

Project ID

216 / 444
Sheet

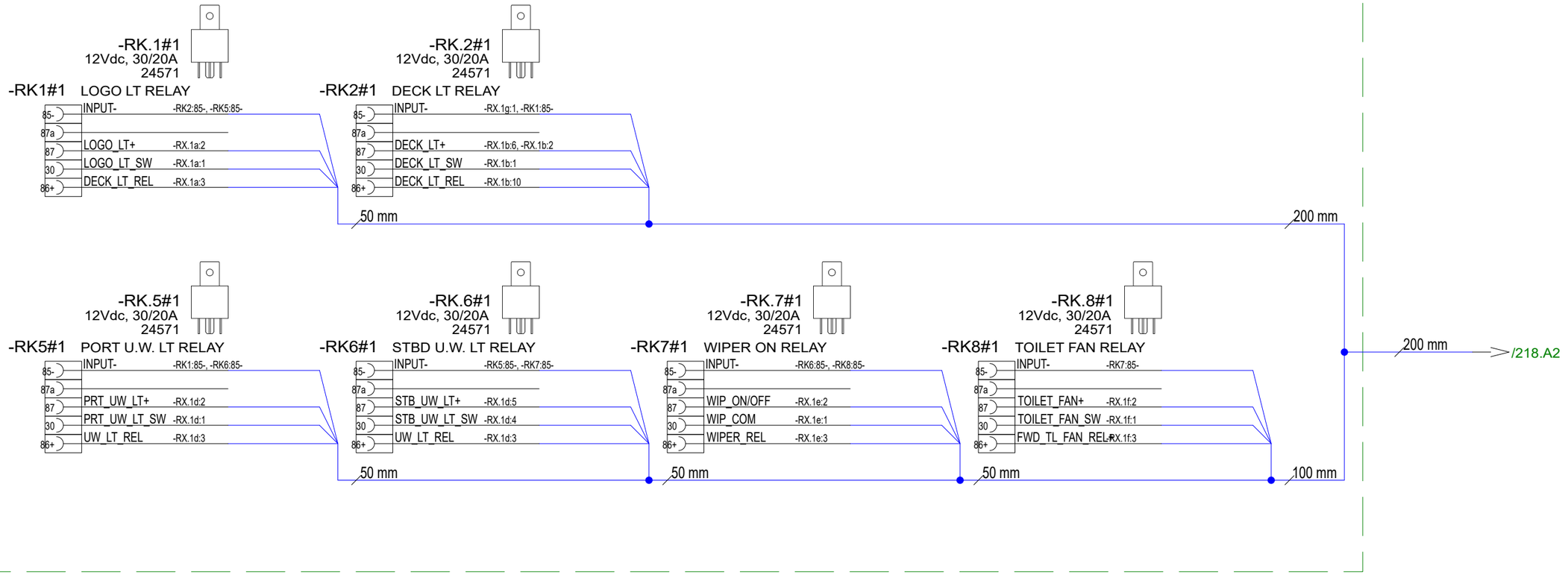

NOTICE!
VERIFY THAT ALL CABLES HAVE MARKINGS
SHOWN IN EXAMPLE BELOW.

EXEMPTION:
ALL <500mm WIRES AND BLACK WIRES
THIS MARKING IS NOT NEEDED.

R2 ISO 6722 100V AWG16 +100 C

MARKING

CABLE

EXAMPLE: RED 1,5mm2 WIRE MARKINGS.

Date of modification	Modified by	Description
1.3.2022	TuM	A1: 2003713; INTRODUCED DRAWING.
2.5.2023	VR	B2: 2004274; REMOVED CRITICAL EQ. RELAYS
3.6.2024	TuM	C3: 2005065; MAIN CAB RELAYS RK3 & RK4, -RX.1c REMOVED,

Date 1.3.2022
Drawing by TuM
Sheet rev. 3
Project rev. C

Copyright by

NAVIX

Boat	Sub-product code	Product code	Project ID
Axopar		36429	
Boat model	Title	Loc	Sheet
45	RELAY UNIT	HL	217 / 444

/217.C7

-RX.1a#1

-RX.1a#1
2634310
(3NT BACK VIEW)

1	LOGO_LT_SW	-RK1:30
2	LOGO_LT+	-RK1:87
3	DECK_LT_REL	-RK1:86+

2634310

100 mm

100 mm

-RX.1e#1

-RK7:30	WIP_COM	1
-RK7:87	WIP_ON/OFF	2
-RK7:86+	WIPER_REL	3

2634310

-RX.1e#1
2634310
(3NT BACK VIEW)

-RX.1b#1

1	DECK_LT_SW	-RK2:30
2	DECK_LT+	-RK2:87, -RX.1b:3
3	DECK_LT+	-RX.1b:4, -RX.1b:2
4	DECK_LT+	-RX.1b:5, -RX.1b:3
5	DECK_LT+	-RX.1b:4
6	DECK_LT+	-RK2:87, -RX.1b:7
7	DECK_LT+	-RX.1b:8, -RX.1b:6
8	DECK_LT+	-RX.1b:9, -RX.1b:7
9	DECK_LT+	-RX.1b:8
10	DECK_LT_REL	-RK2:86+
11		

2639010

-RX.1b#1
2639010
(11N BACK VIEW)

-RX.1f#1

-RK8:30	TOILET_FAN_SW	1
-RK8:87	TOILET_FAN+	2
-RK8:86+	FWD_TL_FAN_REL+	3

2634310

-RX.1f#1
2634310
(3NT BACK VIEW)

-RX.1g#1

-RK2:85-	INPUT-	1

2634110

-RX.1g#1
2634110
(1N BACK VIEW)

-RX.1d#1

1	PRT_UW_LT_SW	-RK5:30
2	PRT_UW_LT+	-RK5:87
3	UW_LT_REL	-RK5:86+, -RK6:86+
4	STB_UW_LT_SW	-RK6:30
5	STB_UW_LT+	-RK6:87
6		

2634610

-RX.1d#1
2634610
(6N BACK VIEW)

100 mm

Date of modification	Modified by	Description
1.3.2022	TuM	A1: 2003713; INTRODUCED DRAWING.
2.5.2023	VR	B2: 2004274; REMOVED CRITICAL EQ. RELAYS
3.6.2024	TuM	C3: 2005065; MAIN CAB RELAYS RK3 & RK4, -RX.1c REMOVED,

Date	1.3.2022
Drawing by	TuM
Sheet rev.	3
Project rev.	C

Copyright by

Axopar Boat		36429 Product code		Project ID
45 Boat model	RELAY UNIT Title		HL Loc	218 / 444 Sheet

INSTRUCTIONS FOR ATTACHING CABLES/ RELAYS
TO RELAY HOLDER:

1. PULL SECONDARY LOCK OUT OF RELAY HOLDER
   APPROX 1cm WITH TOOL IF NEEDED
   (DO NOT PULL COMPLETELY OUT)
2. MOUNT WIRES
3. PUSH SECONDARY LOCK BACK IN
4. MOUNT RELAY TO RELAY HOLDER

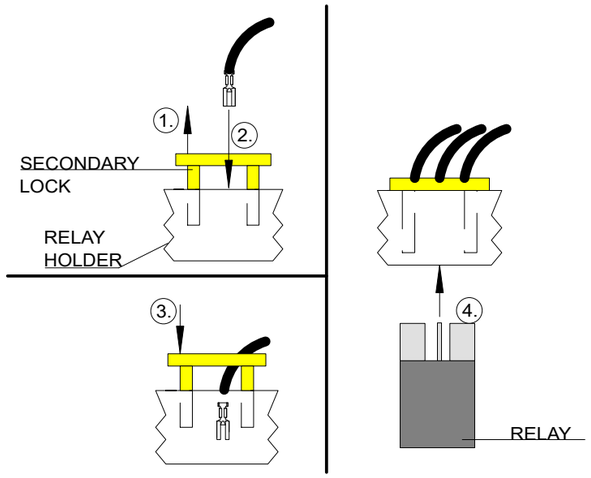

PIN ORDER

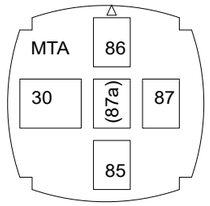

SECONDARY LOCK

SEEN FROM
WIRING SIDE
(BACK VIEW)

RELAY HOLDER PARTS:

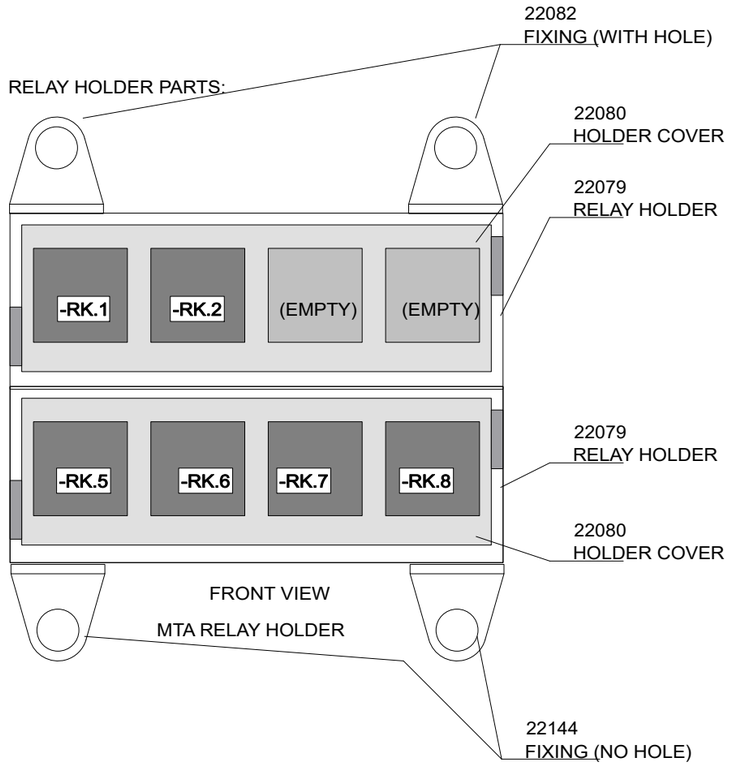

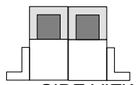

SIDE VIEW

NOTICE!
ATTACH TWO 22079
RELAY HOLDERS
TOGETHER.

LABEL INSTRUCTIONS

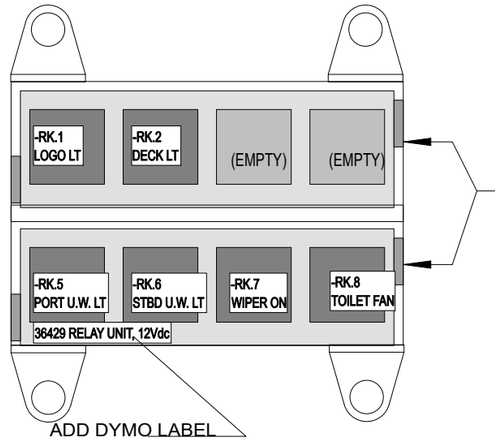

ADD DYMO LABELS TO
RELAY HOLDER COVERS.
FOLLOW EXAMPLE ON LEFT.
LEAVE "RELAY" -WORD FROM
LABEL.

FRONT VIEW
MTA RELAY HOLDER

1.3.2022	TuM	A1: 2003713; INTRODUCED DRAWING.	Date 1.3.2022	NAVIX	Axopar		36429	
2.5.2023	VR	B2: 2004274; REMOVED CRITICAL EQ. RELAYS	Drawing by TuM		Boat	Sub-product code	Product code	Project ID
3.6.2024	TuM	C3: 2005065; MAIN CAB RELAYS RK3 & RK4, -RX.1c REMOVED,	Sheet rev. 3		45	RELAY UNIT	HL	219 / 444
Date of modification	Modified by	Description	Project rev. C	Copyright by	Boat model	Title	Loc	Sheet

GENERAL LAYOUT/ LABEL INSTALLATION

WITHOUT COVER

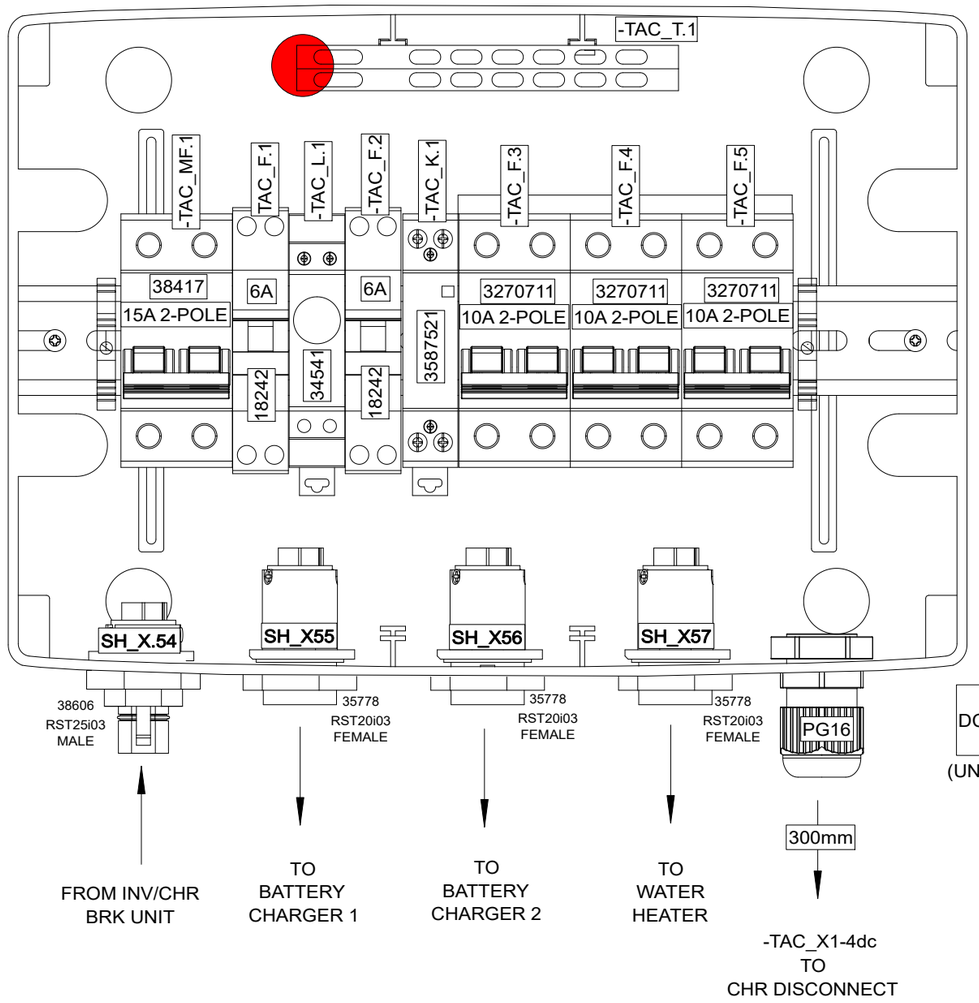

ENCLOSURE:
18114 (12-mod)

LABEL
12VDC
DC/DC CHARGER
CONTROL
(UNDER PG GLAND)

LEAVE BOX OWN COVER PLATE

WITH COVER

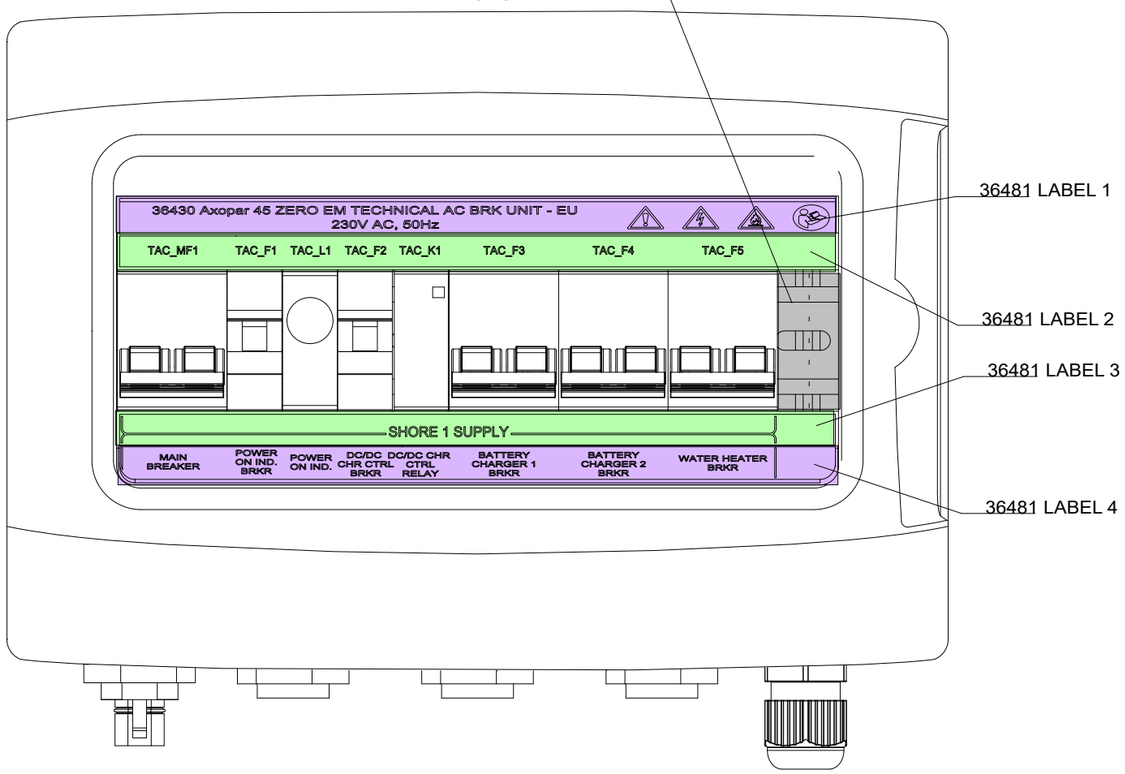

INCLUDED TO DELIVERY

1 x

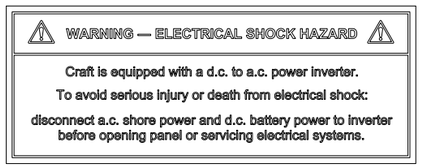

35106_NAVIX_ISO_INVERTER_CHARGER_WARNING_LABEL_V1

BUSBAR LABEL MOUNTING

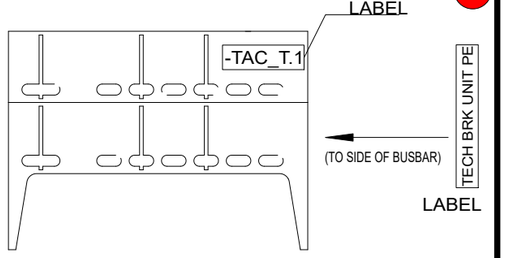

DRILL HOLES WITH 39478JI_V1 AND 39480JI_V1 AS GUIDE

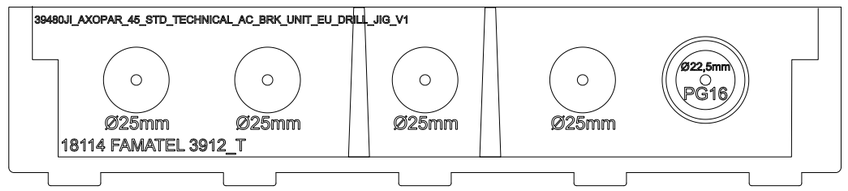

Date of modification	Modified by	Description
3.3.2022	TuM	A1: 2003713; INTRODUCED DRAWING.
4.9.2023	TuM/TT	B2: 2004274; ADDED CABLING
9.11.2023	PF/TuM	C3: 2004890; Added end clamps, 2005065: busbar end pieces added

Date	3.3.2022
Drawing by	TuM
Sheet rev.	3
Project rev.	C

Copyright by

NAVIX

Axopar Boat	36481 Sub-product code	36430 Product code	Project ID
45 Boat model	ZERO EM TECHNICAL AC BRK UNIT - EU Title	HL Loc	220 / 444 Sheet

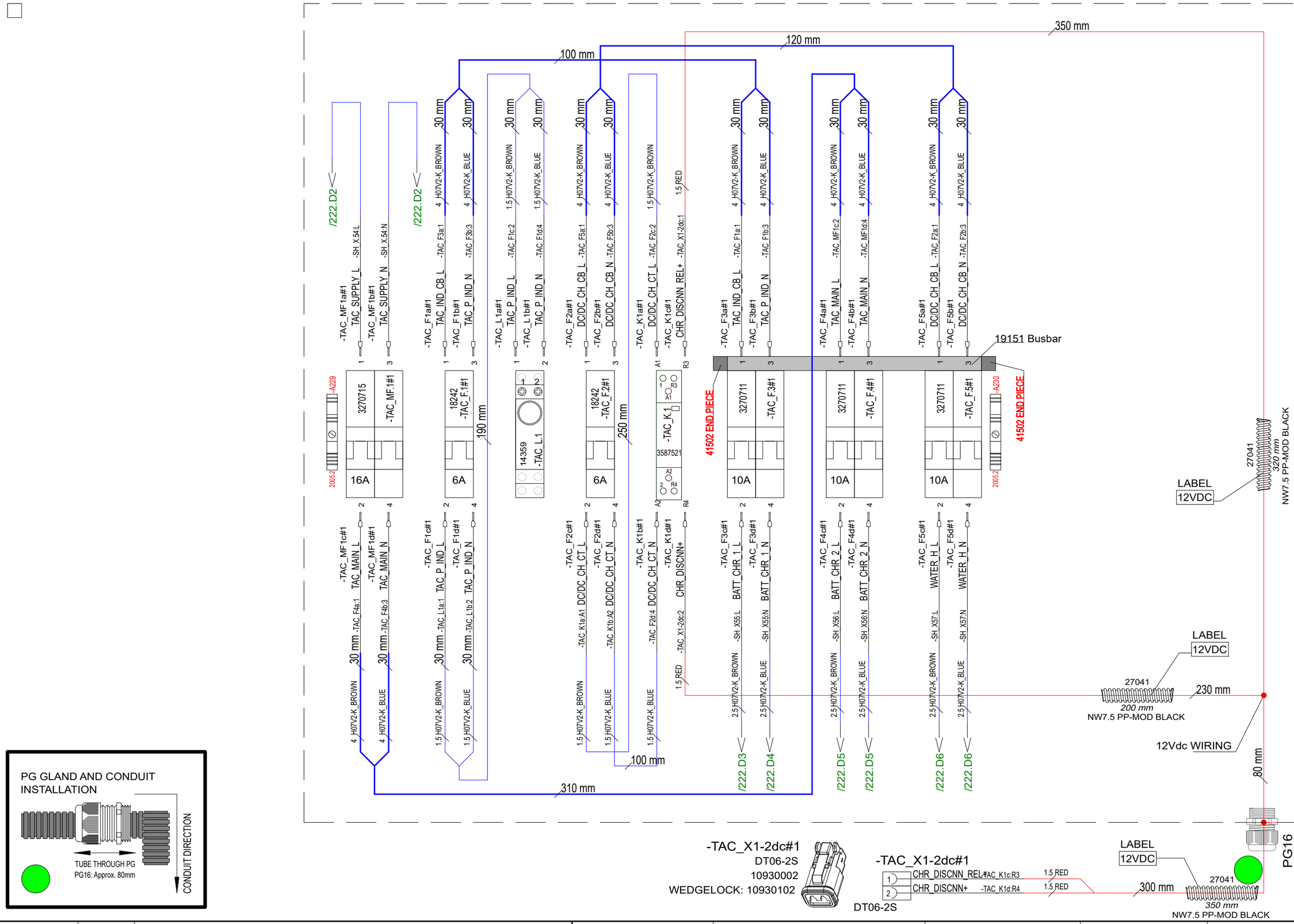

Date of modification	Modified by	Description
3.3.2022	TuM	A1: 2003713; INTRODUCED DRAWING.
4.9.2023	TuM/TT	B2: 2004274; ADDED CABLING
9.11.2023	PF/TuM	C3: 2004890; Added end clamps, 2005065: busbar end pieces added

Date	3.3.2022
Drawing by	TuM
Sheet rev.	3
Project rev.	C

NAVIX

Copyright by

Axopar	36481	36430	
Boat	Sub-product code	Product code	Project ID
45	ZERO EM TECHNICAL AC BRK UNIT - EU	HL	221/ 444
Boat model	Title	Loc	Sheet

ENCLOSURE TOP

-TAC_T.1
28717
TECH BRK UNIT PE

-TAC_T1a#1
-SH_X.54:PE TAC_SUPPLY_PE

-TAC_T1c#1
-SH_X55:PE BATT_CHR_1_PE

-TAC_T1d#1
-SH_X56:PE BATT_CHR_2_PE

-TAC_T1e#1
-SH_X57:PE WATER_H_PE

2.5 H07V2-K_YELLOW/GREEN
2.5 H07V2-K_YELLOW/GREEN
2.5 H07V2-K_YELLOW/GREEN
2.5 H07V2-K_YELLOW/GREEN

ENCLOSURE BOTTOM

/221.B2
/221.B3
250 mm
250 mm
250 mm

/221.E5
/221.E5
130 mm
130 mm
230 mm

/221.E5
/221.E5
90 mm
90 mm
180 mm

/221.E6
/221.E6
80 mm
80 mm
200 mm

-SH_X.54
38606

-SH_X55
35778

-SH_X56
35778

-SH_X57
35778

-SH_X.54#1
L TAC_SUPPLY_L -TAC_MF1a:1
N TAC_SUPPLY_N -TAC_MF1b:3
PE TAC_SUPPLY_PE -TAC_T1a:1
38606

-SH_X55#1
L BATT_CHR_1_L -TAC_F3c:2
N BATT_CHR_1_N -TAC_F3d:4
PE BATT_CHR_1_PE -TAC_T1c:1
35778

-SH_X56#1
L BATT_CHR_2_L -TAC_F4c:2
N BATT_CHR_2_N -TAC_F4d:4
PE BATT_CHR_2_PE -TAC_T1d:1
35778

-SH_X57#1
L WATER_H_L -TAC_F5c:2
N WATER_H_N -TAC_F5d:4
PE WATER_H_PE -TAC_T1e:1
35778

3.3.2022	TuM	A1: 2003713; INTRODUCED DRAWING.	Date 3.3.2022	NAVIX	Axopar	36481	36430	
4.9.2023	TuM/TT	B2: 2004274; ADDED CABLING	Drawing by TuM		Boat	Sub-product code	Product code	Project ID
9.11.2023	PF/TuM	C3: 2004890; Added end clamps, 2005065: busbar end pieces added	Sheet rev. 3		45	ZERO EM TECHNICAL AC BRK UNIT - EU	HL	222 / 444
Date of modification	Modified by	Description	Project rev. C	Copyright by	Boat model	Title	Loc	Sheet

SPC TARKASTUSPÖYTÄKIRJA
SPC INSPECTION SHEET

TUOTE TARRA /
PRODUCT LABEL

* PPKKVV-JÄRJESTYSNUMERO / DDMMYY-RUNNING NUMBER (Esim. 11. maaliskuuta 2013 tehty tuote on sarjanumeroltaan 110313-01, seuraava on 110313-02 jne.)

SARJANUMERO* / SERIAL NUMBER*						
JOHDOT KIINNI OIKEIN / CORRECT CONNECTIONS						
MAADOITUS TULEVAT JA LÄHTEVÄT / GROUND CONNECTION IN AND OUT						
VVS JA TOTSIT I-ASENNOSSA / RCBO AND CIRCUIT BREAKERS IN I-POSITION						
ERISTYSVASTUS (mA) max lukema ** / ISOLATION RESISTOR (mA) max **						
MAAPIIRI 10A (Ohm) max lukema ** / GROUND CIRCUIT 10A (Ohm) max **						
TOIMINNALLINEN JA VVS TESTAUS / FUNCTIONAL AND RCBO TEST						
SARJANUMERO TARRA / SERIAL NUMBER STICKER						
PVM / DATE						
TESTASI / TESTED BY						

Tehty CENELEC EN 50106 mukaan / Made according to CENELEC EN 50106

**ERISTYSVASTUS JA MAAPIIRI TESTATTAVA JOKAISEEN SISÄÄNTULOON JA ULOSMENOON / ISOLATION RESISTOR AND GROUND CIRCUIT SHOULD BE TESTED FOR EVERY IN AND OUT

RAJA-ARVOT / LIMITS:

ERISTYSVASTUS / ISOLATING RESISTOR 1000V = <20mA

MAAPIIRI / GROUND CIRCUIT 10A = <0,2 Ohm

Date of modification	Modified by	Description
3.3.2022	TuM	A1: 2003713; INTRODUCED DRAWING.
4.9.2023	TuM/TT	B2: 2004274; ADDED CABLING
9.11.2023	PF/TuM	C3: 2004890; Added end clamps, 2005065: busbar end pieces added

Date	3.3.2022
Drawing by	TuM
Sheet rev.	3
Project rev.	C

Copyright by NAVIX

Axopar Boat	36481 Sub-product code	36430 Product code	Project ID
45 Boat model	ZERO EM TECHNICAL AC BRK UNIT - EU Title	HL Loc	223 / 444 Sheet

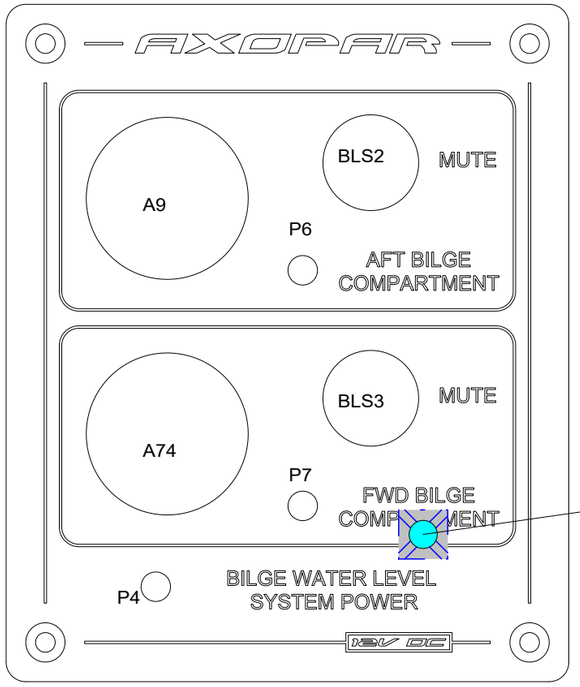

Cable tie mount
VMI36506
(BEHIND PANEL)

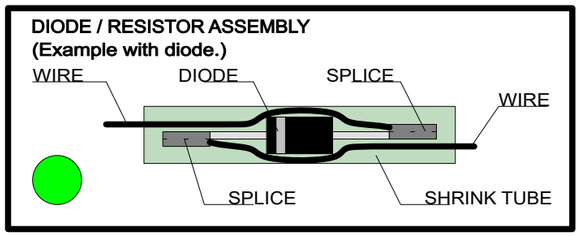

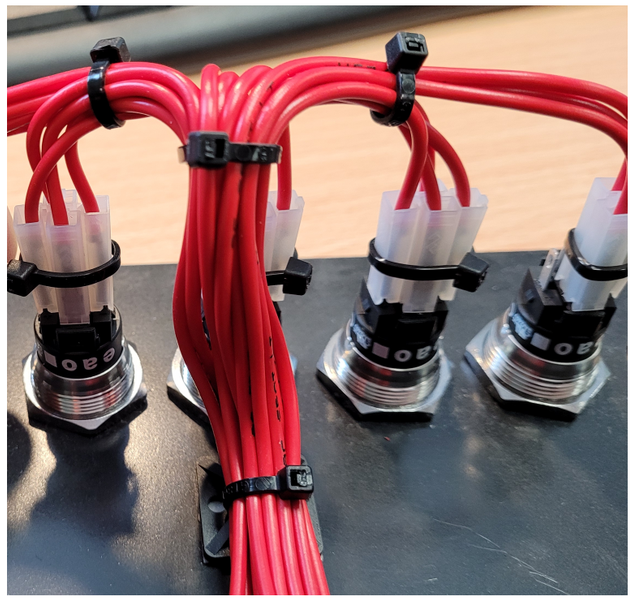

CABLE TIE MOUNT INSTALLATION

1. Install the Cable Tie Mount on the back of the panel,
using double-sided tape attached. As in the pictures (Clean the panel surface first.)
2. Attach the harness to the mount with the cable tie.
3. Make sure that the wires coming from the switches
are not tight!

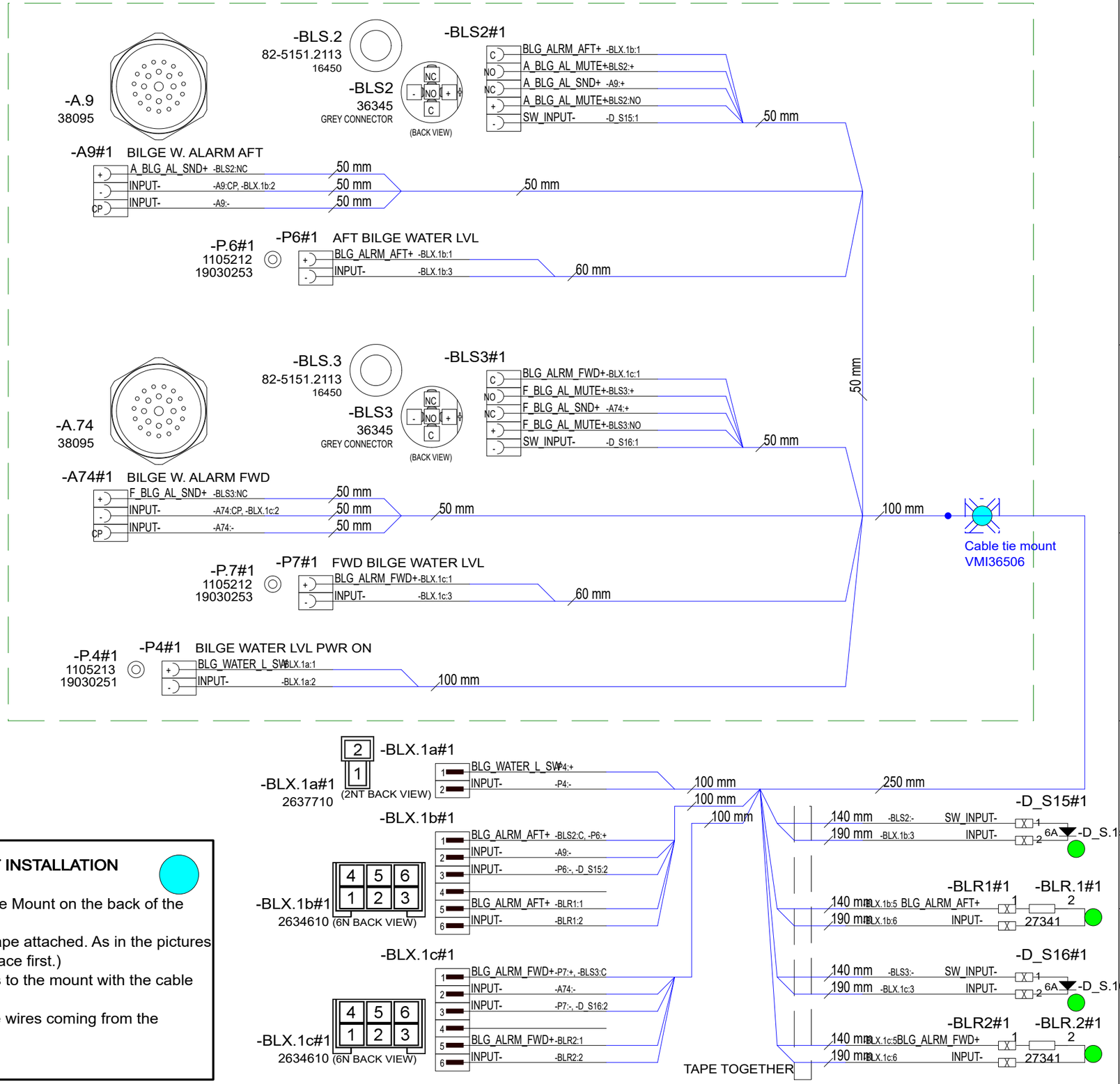

Date of modification	Modified by	Description
2.3.2022	TuM	A1: 2003713; INTRODUCED DRAWING.
3.5.2023	VR	B2: 2004274; CHANGED BUZZERS, ADDED SWITCH CONNECTORS
31.5.2024	TuM	C2: 2005065; NOT MODIFIED.

Date	2.3.2022
Drawing by	TuM
Sheet rev.	2
Project rev.	C

Copyright by NAVIX

Axopar Boat	36516 Sub-product code	36497 Product code	Project ID
45 Boat model	BILGE HIGH WATER ALARM PANEL Title	HL Loc	224 / 444 Sheet

GENERAL LAYOUT & LABELS
WIRE ROUTES / CABLE TIES

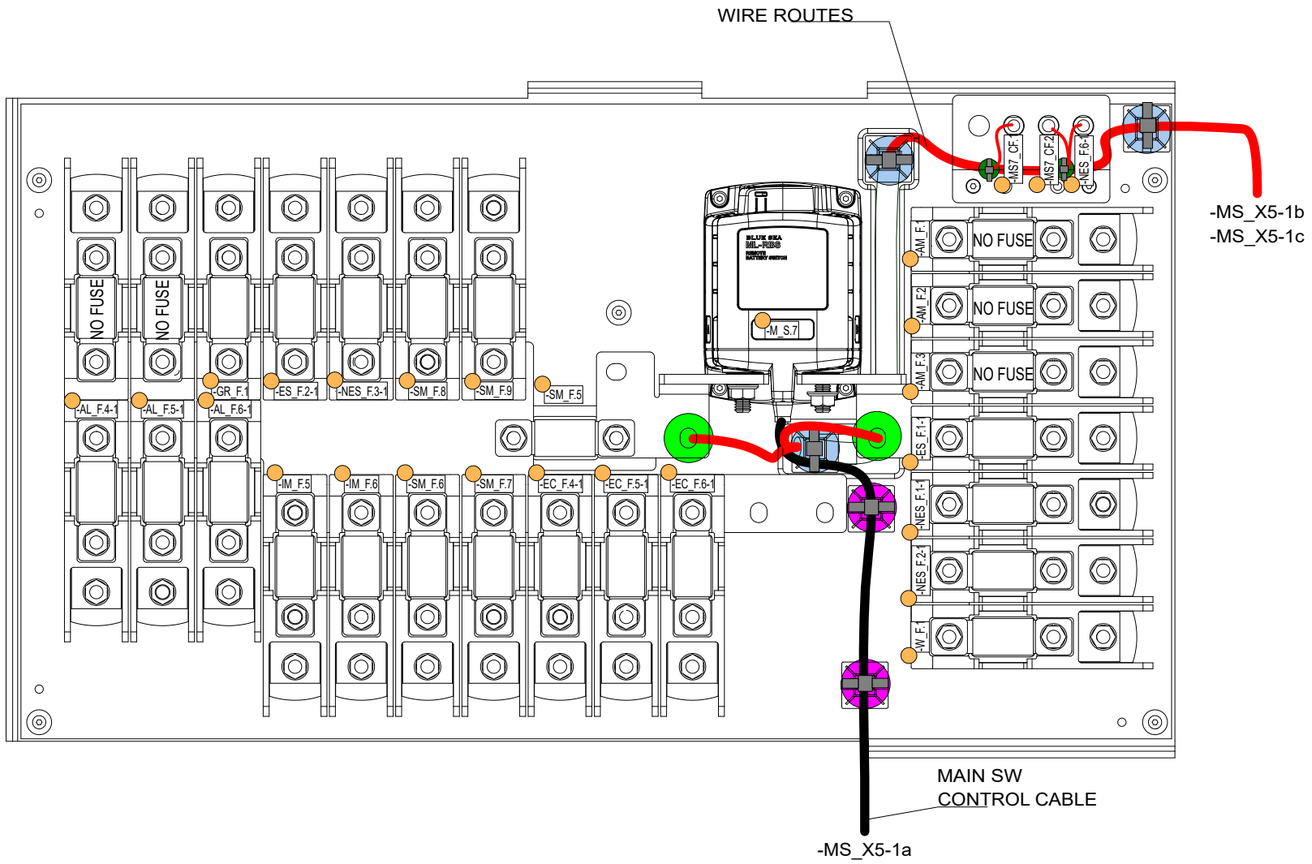

COVER LABEL INSTALLATION

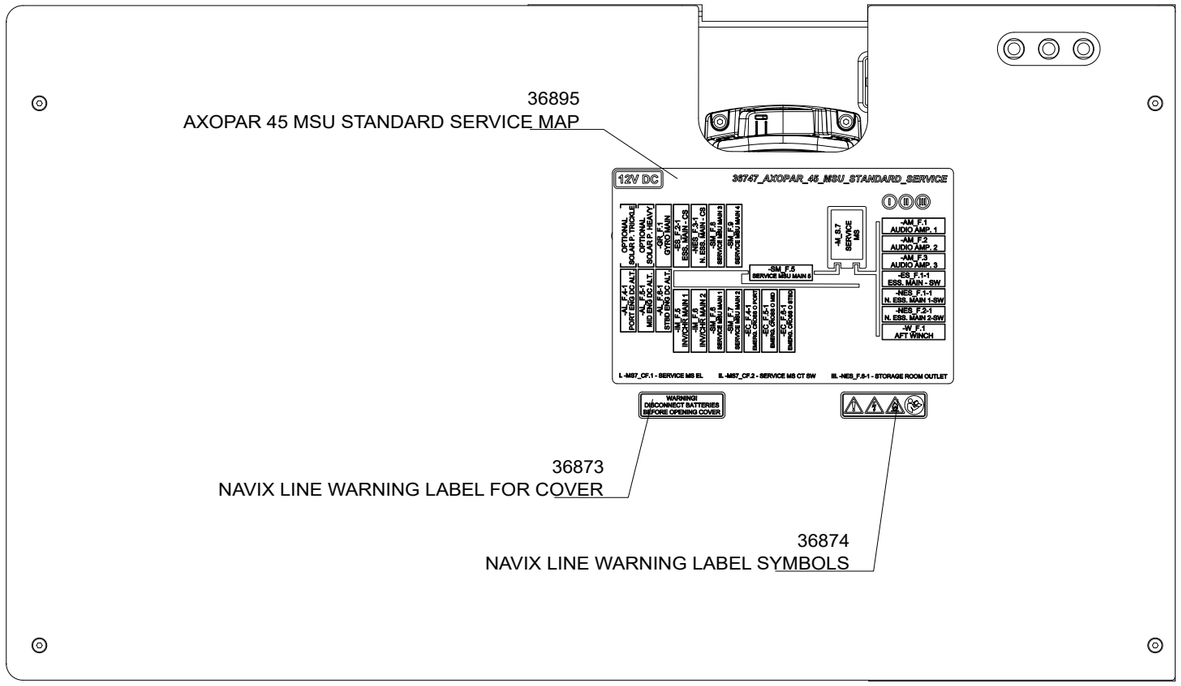

LABEL

Cable tie mount
VMI36559
+ CABLE TIE

CABLE TIE

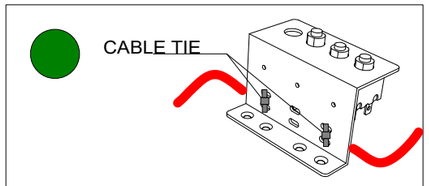

(ATTACHED TO 33383_NAVIX_LINE_MSU_FUSE_HOLDER)

WIRE TERMINALS

COPPER BAR

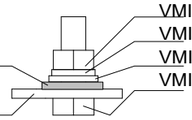

VMI32012 HEX NUT M8 DIN934
VMI32011 SPRING LOCK WASHER M8 DIN127
VMI32013 FLAT WASHER FOR HEX BOLT M8
VMI32018 HEX BOLT FULL THREAD M8X25 DIN933

Cable tie mount
VMI36559
+ CABLE TIE

(ONLY WITH TAPE FITTING)
(CLEAR THE SURFACE BEFORE ATTACHING CABLE TIE MOUNT)

Date of modification	Modified by	Description
4.7.2022	TuM	A1: 2003713; INTRODUCED DRAWING.
3.5.2023	RK	B1: 2004274; NOT MODIFIED.
4.12.2023	PF	C2: 2004890; V8 fuses moved to product 40364

Date	4.7.2022
Drawing by	TuM
Sheet rev.	2
Project rev.	C

NAVIX

Copyright by

Axopar Boat	SEE EXP VIEW Sub-product code	36747 Product code	Project ID	
45 Boat model	MSU STANDARD SERVICE Title	HL Loc	225 / 444 Sheet	

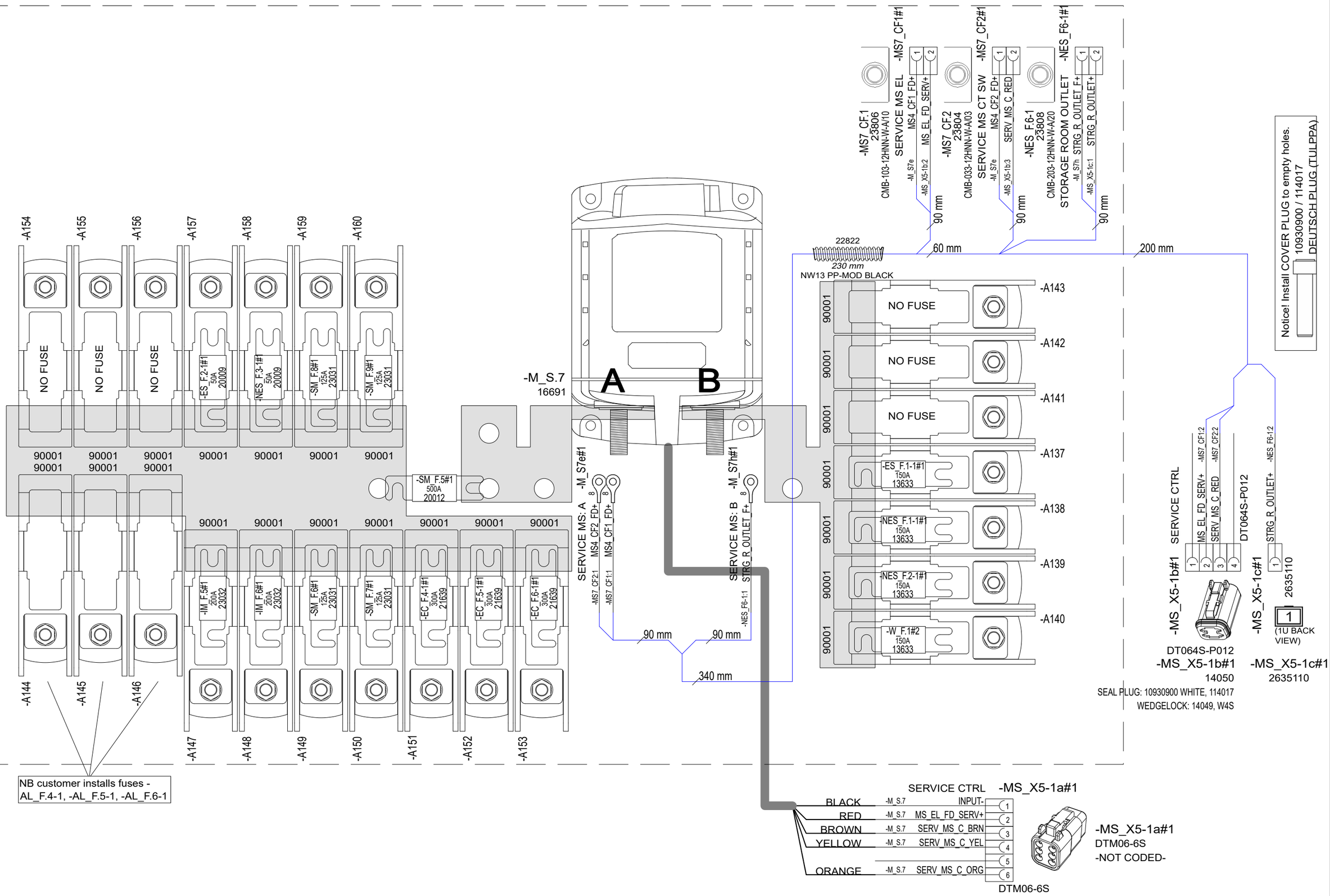

Date of modification	Modified by	Description						
4.7.2022	TuM	A1: 2003713; INTRODUCED DRAWING.	Date	4.7.2022	NAVIX	Axopar	SEE EXP VIEW	36747	
3.5.2023	RK	B1: 2004274; NOT MODIFIED.	Drawing by	TuM		Boat	Sub-product code	Product code	Project ID
4.12.2023	PF	C2: 2004890; V8 fuses moved to product 40364	Sheet rev.	2	Copyright by	45	MSU STANDARD SERVICE	HL	226 / 444
			Project rev.	C		Boat model	Title	Loc	Sheet

EXP VIEW

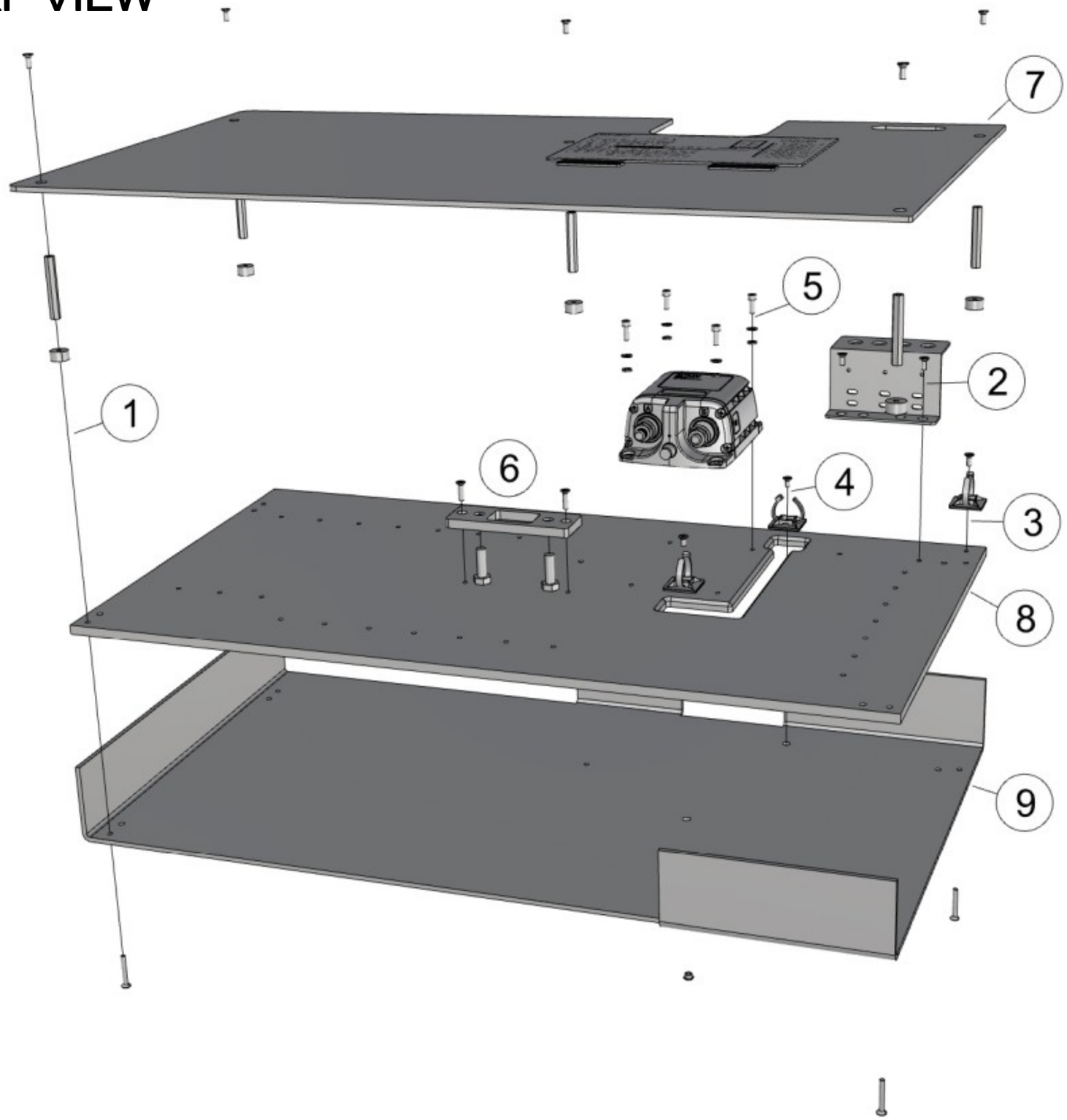

36747_AXOPAR_45_MSU_STANDARD_SERVICE

1. 5PCS VMI30914 COUNTERSUNK HEAD SCREW HEX SOCKET M4X10 DIN7991
   5PCS VMI32041 EXTENSION BOLT M4 L-50
   5PCS 29063_NAVIX_LINE_8MM_WASHER_V1
   5PCS VMI30920 COUNTERSUNK HEAD SCREW HEX SOCKET M4X30 DIN7991

2. 2PCS VMI30914 COUNTERSUNK HEAD SCREW HEX SOCKET M4X10 DIN7991
   1PC 33383_NAVIX_LINE_MSU_FUSE_HOLDER

3. 1PC VMI30914 COUNTERSUNK HEAD SCREW HEX SOCKET M4X10 DIN7991
   - ZIPTIE AND -HOLDER (AS IN DIAGRAM) -

4. 2PCS VMI30913 COUNTERSUNK HEAD SCREW HEX SOCKET M4X8 DIN7991
   - ZIPTIE AND -HOLDER (AS IN DIAGRAM) -
   2PCS 9872 ETSOS M4X4

5. 4PCS VMI30944 HEX SOCKET HEAD CAP SCREW M4X12 DIN912
   4PCS VMI30904 SPRING LOCK WASHER M4 DIN127
   4PCS VMI30906 FLAT WASHER FOR HEX BOLTS AND NUTS M4 DIN125A
- MAIN SWITCH (AS IN DIAGRAM) -

6. - BUSBAR (AS IN DIAGRAM) -

   2PCS VMI30917 COUNTERSUNK HEAD SCREW HEX SOCKET M4X16 DIN7991

   1PC 36830_AXOPAR_45_MSU_STANDARD_SERVICE_ANL_BASE_V1

   2PCS VMI32018 HEX BOLT FULL THREAD M8X25 DIN933

7. 1PC 36827_AXOPAR_45_MSU_STANDARD_SERVICE_COVER_V1
+ LABELS (AS IN DIAGRAM)

8. 1PC 36828_AXOPAR_45_MSU_STANDARD_SERVICE_BASE_V1

9. 1PC 36829_AXOPAR_45_MSU_STANDARD_SERVICE_BACK_V1

Date of modification	Modified by	Description
4.7.2022	TuM	A1: 2003713; INTRODUCED DRAWING.
3.5.2023	RK	B1: 2004274; NOT MODIFIED.
4.12.2023	PF	C2: 2004890; V8 fuses moved to product 40364

Date	4.7.2022
Drawing by	TuM
Sheet rev.	2
Project rev.	C

Copyright by

NAVIX

Axopar Boat	SEE EXP VIEW Sub-product code	36747 Product code	Project ID	
45 Boat model	MSU STANDARD SERVICE Title	HL Loc	227 / 444 Sheet	

EXP VIEW

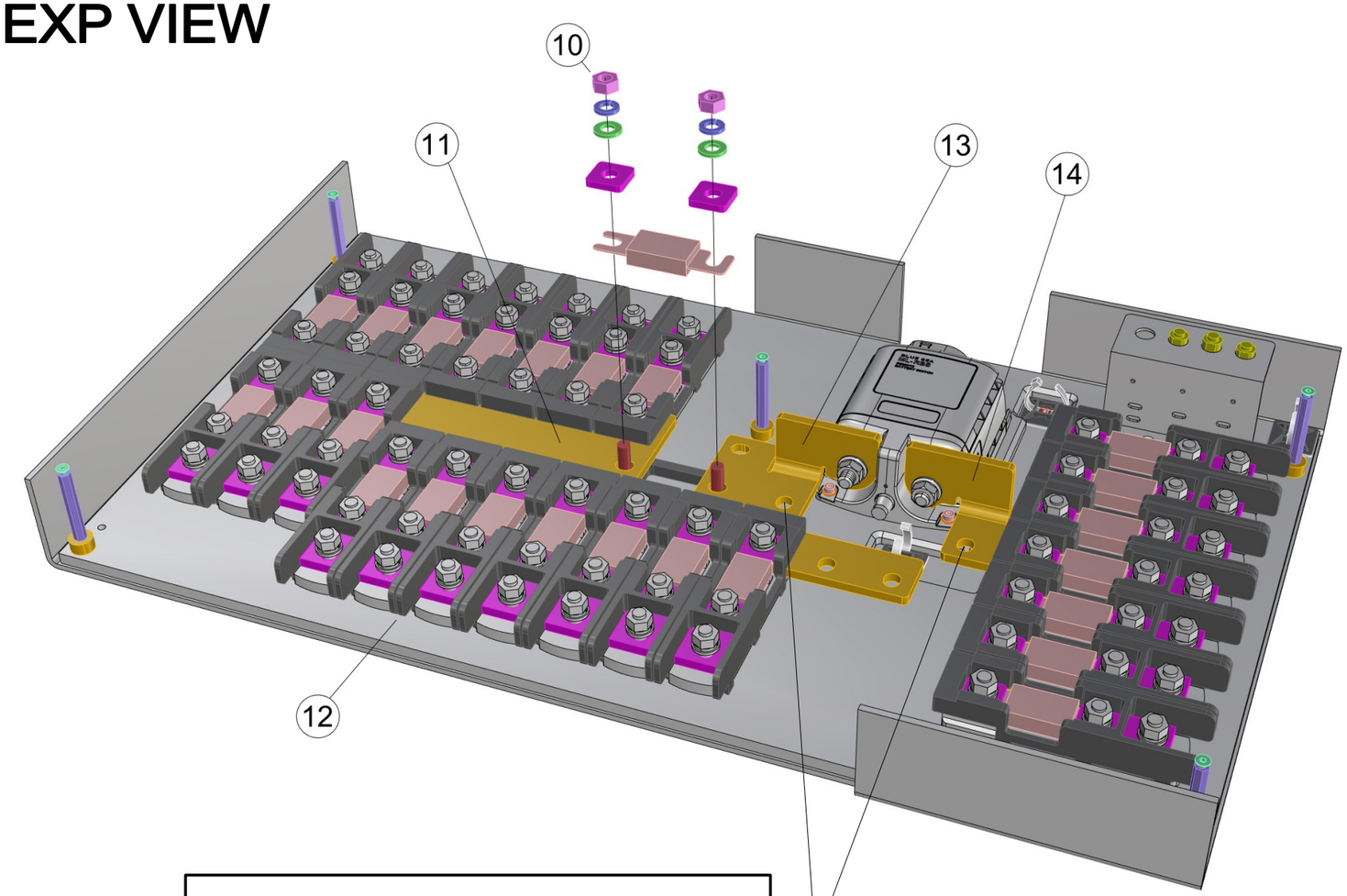

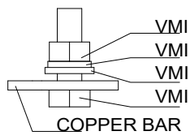

10. 2PCS VMI32012 HEX NUT M8 DIN934
    2PCS VMI32011 SPRING LOCK WASHER M8 DIN127
    2PCS VMI32013 FLAT WASHER FOR HEX BOLTS AND NUTS M8 DIN125A
    2PCS 3667

! FUSE AS IN DIAGRAM !

11. 1PC 36948_NAVIX_LINE_BUS_BAR_TYPE5C_19X_V1

12. 24PCS 90001_NAVIX_LINE_ANL_HOLDER_TYPE5

13. 1PC 36943_NAVIX_LINE_BUS_BAR_TYPE5_LEFT_2X_UP_V1

14. 1PC 36944_NAVIX_LINE_BUS_BAR_TYPE5_RIGHT_7X_UPDOWN_V1

1.6.2022 / TS

ASSEMBLED PANEL

(WITHOUT WIRING)

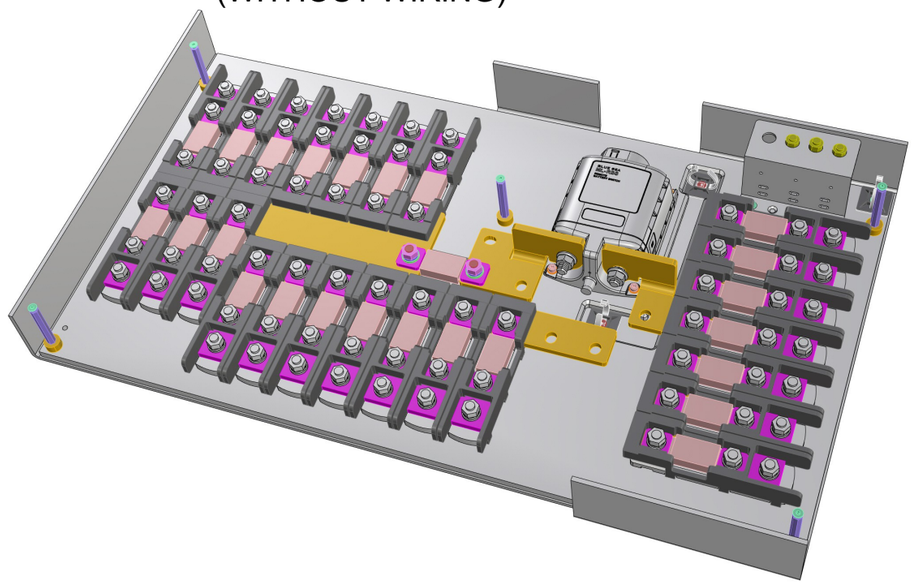

Date of modification	Modified by	Description						
4.7.2022	TuM	A1: 2003713; INTRODUCED DRAWING.	Date	4.7.2022	Axopar	SEE EXP VIEW	36747	
3.5.2023	RK	B1: 2004274; NOT MODIFIED.	Drawing by	TuM	Boat	Sub-product code	Product code	Project ID
4.12.2023	PF	C2: 2004890; V8 fuses moved to product 40364	Sheet rev.	2	45	MSU STANDARD SERVICE	HL	228 / 444
			Project rev.	C	Boat model	Title	Loc	Sheet

Copyright by NAVIX

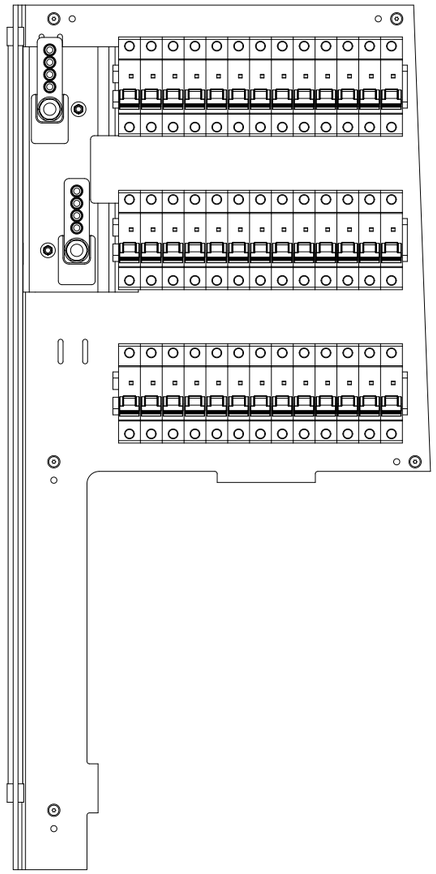

36414 Axopar 45 WARDROBE DC FUSE PANEL

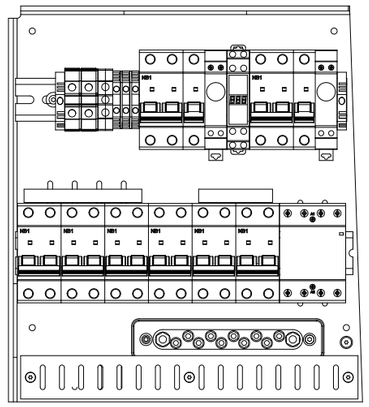

36750 Axopar 45 STANDARD WARDROBE AC BRK PANEL - EU

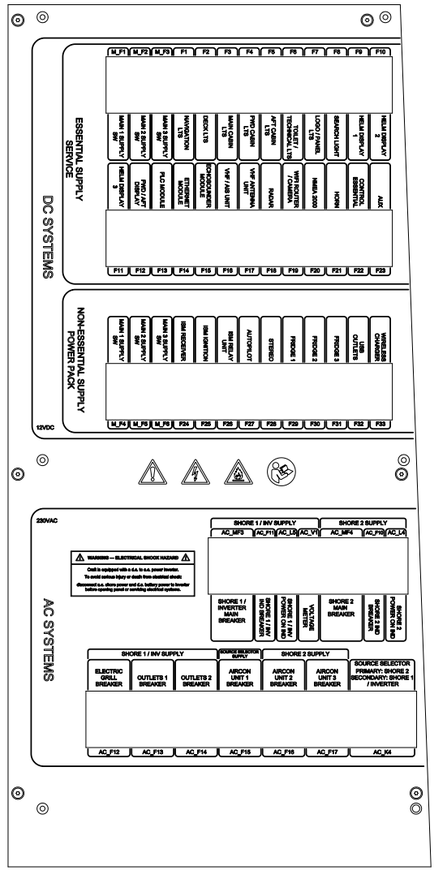

36749 Axopar 45 WARDROBE FUSE PANEL COVER, STANDARD - EU (WOC)

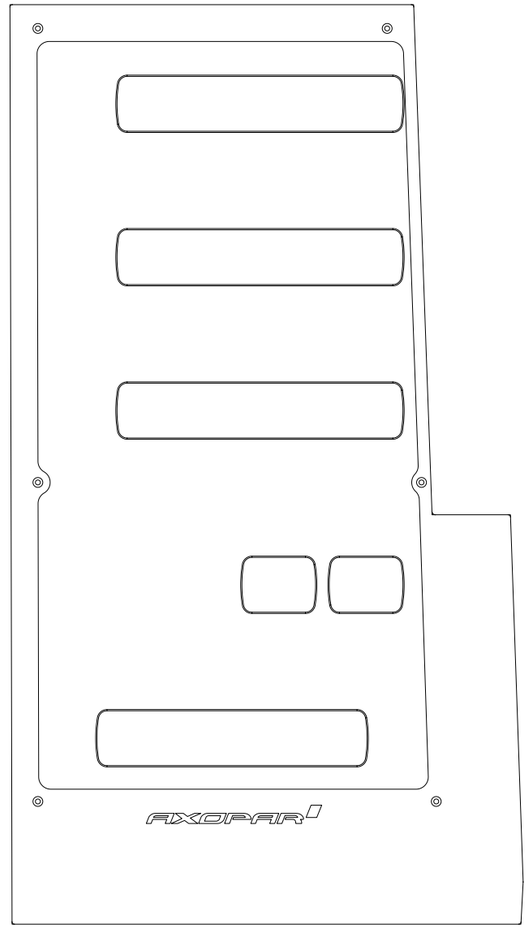

36453 AXOPAR_45_WARDROBE_FUSE_PANEL_WALL_V1

PACK ALL PRODUCTS TO SAME PACKAGE.

Date of modification	Modified by	Description
6.6.2024	TuM	C3: 2005065; 36750 & 36749 UPDATED.
13.4.2023	TuM	A1: 2004274; 36453 PANEL ADDED
5.6.2023	TuM	B2: 2004274; 36414 & 36749 UPDATED.

Date	13.6.2022
Drawing by	TuM
Sheet rev.	3
Project rev.	C

Copyright by

NAVIX

Axopar		36748	
Boat	Sub-product code	Product code	Project ID
45	STANDARD WARDROBE FUSE PANEL - EU	HL	229 / 444
Boat model	Title	Loc	Sheet

GENERAL LAYOUT/ LABEL INSTALLATION

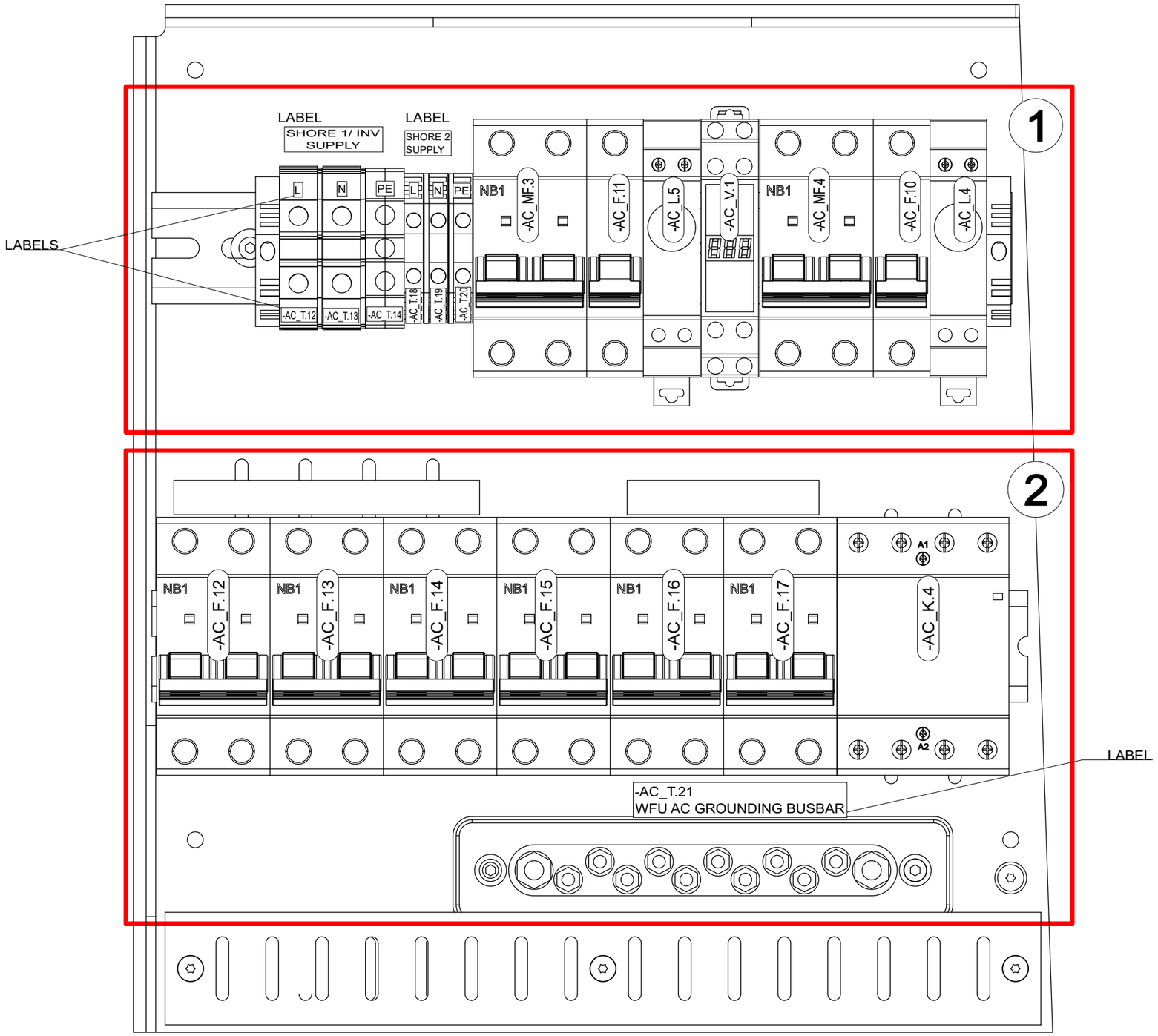

Date of modification	Modified by	Description
10.6.2022	TuM	A1: 2003713; INTRODUCED DRAWING.
07.09.2023	TuM/AR	B2: 2004274 SH_X.80, SH_X.81, SH_X82 - SH_X88 ADDED
30.5.2024	TuM	C3: 2005065; Voltage meter AC_V1, 41502 END PIECES added.

Date	10.6.2022
Drawing by	TuM
Sheet rev.	3
Project rev.	C

Copyright by

NAVIX

Axopar Boat	SEE EXP VIEW Sub-product code	36750 Product code	Project ID
45 Boat model	STANDARD WARDROBE AC BRK PANEL - EU Title	HL Loc	230 / 444 Sheet

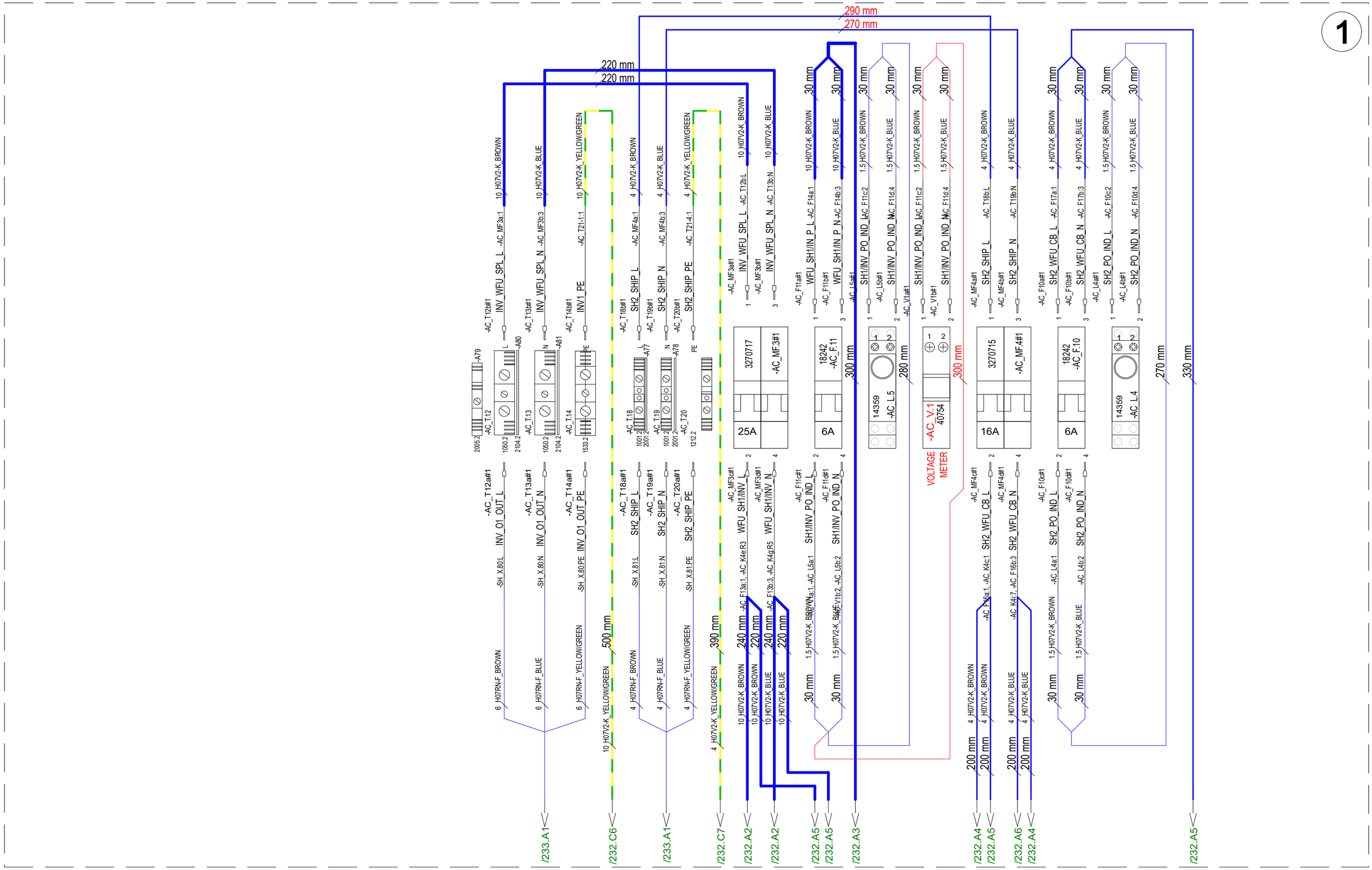

10.6.2022	TuM	A1: 2003713; INTRODUCED DRAWING.	Date	10.6.2022	NAVIX	Axopar	SEE EXP VIEW	36750	
07.09.2023	TuM/AR	B2: 2004274 SH_X.80, SH_X.81, SH_X82 - SH_X88 ADDED	Drawing by	TuM		Boat	Sub-product code	Product code	Project ID
30.5.2024	TuM	C3: 2005065; Voltage meter AC_V1, 41502 END PIECES added.	Sheet rev.	3		45	STANDARD WARDROBE AC BRK PANEL - EU	HL	231/ 444
Date of modification	Modified by	Description	Project rev.	C	Copyright by	Boat model	Title	Loc	Sheet

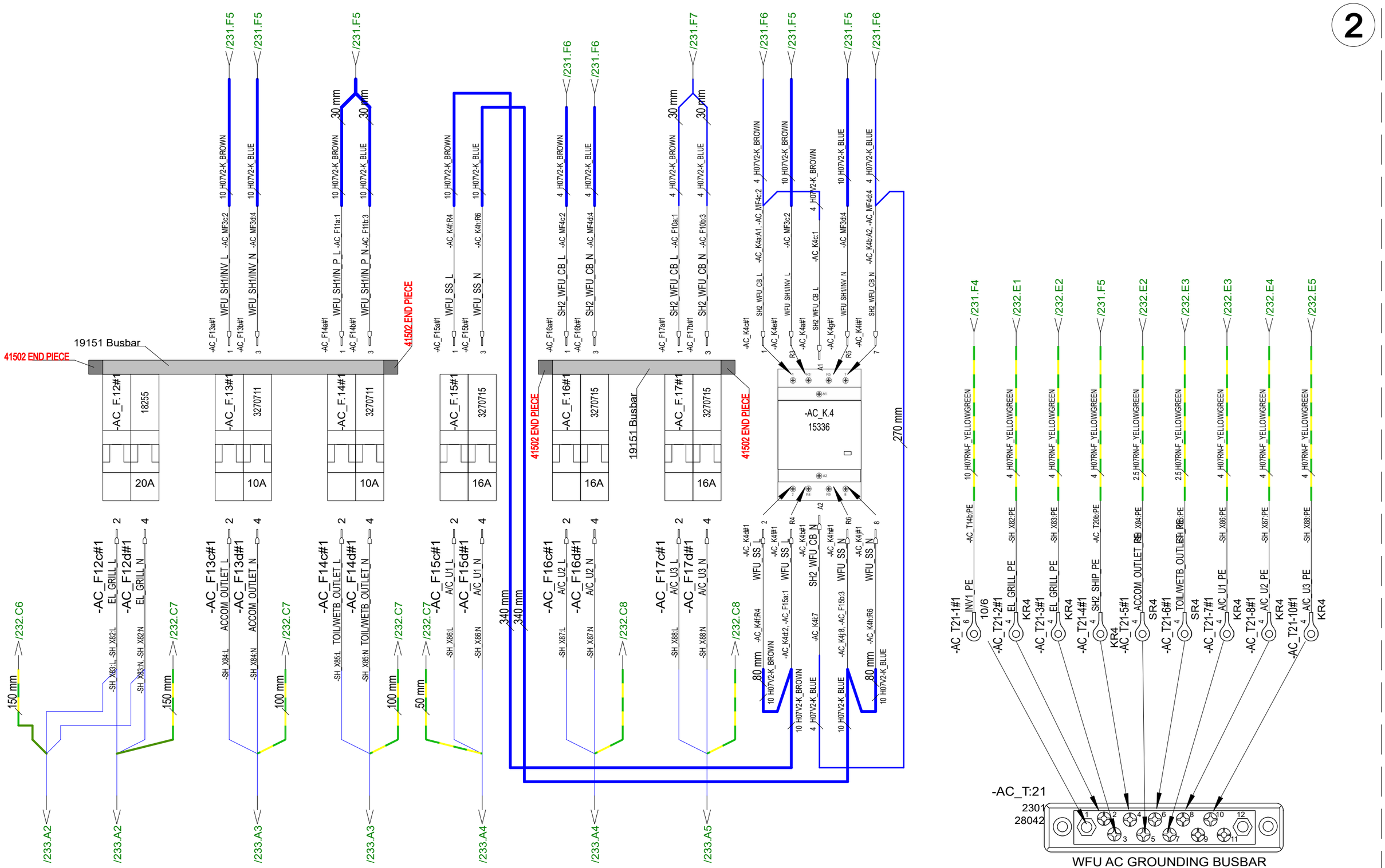

10.6.2022	TuM	A1: 2003713; INTRODUCED DRAWING.	Date	10.6.2022	NAVIX	Axopar	
07.09.2023	TuM/AR	B2: 2004274 SH_X.80, SH_X.81, SH_X82 - SH_X88 ADDED	Drawing by	TuM		Boat	SEE EXP VIEW / Sub-product code / 36750 / Product code / Project ID
30.5.2024	TuM	C3: 2005065; Voltage meter AC_V1, 41502 END PIECES added.	Sheet rev.	3		45	STANDARD WARDROBE / AC BRK PANEL - EU / HL
Date of modification	Modified by	Description	Project rev.	C	Copyright by	Boat model	Title / Loc / 232 / 444 Sheet

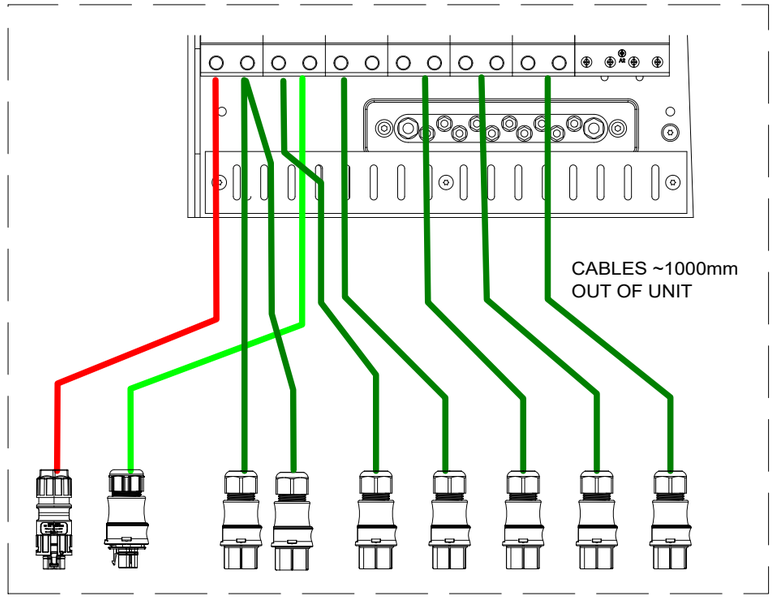

GROUNDING CABLE INCLUDED

-B1-30#1 — MAIN DC NEG. BUSBAR — 10 WFU_PE — -AC_T21-12:1 — 10000 mm — 22821 — 9800 mm — NW10 PP-MOD BLACK — 16 33372 SO07Z-K YELLOW/GREEN -B1-30:1 — WFU AC GROUNDING BUSBAR — 8 WFU_PE — -AC_T21-12#1

16/10 — 16/6

-SH_X.80#1	-SH_X.81#1	-SH_X82#1	-SH_X83#1	-SH_X84#1	-SH_X85#1	-SH_X86#1	-SH_X87#1	-SH_X88#1				
INV_O1_OUT_L	SH2_SHIP_L	EL_GRILL_L	EL_GRILL_L	ACCOM_OUTLET_L	TOIL/WETB_OUTLET_L	A/C_U1_L	A/C_U2_L	A/C_U3_L				
INV_O1_OUT_N	SH2_SHIP_N	EL_GRILL_N	EL_GRILL_N	ACCOM_OUTLET_N	TOIL/WETB_OUTLET_N	A/C_U1_N	A/C_U2_N	A/C_U3_N				
INV_O1_OUT_PE	SH2_SHIP_PE	EL_GRILL_PE	EL_GRILL_PE	ACCOM_OUTLET_PE	TOIL/WETB_OUTLET_PE	A/C_U1_PE	A/C_U2_PE	A/C_U3_PE				
L	L	L	L	L	L	L	L	L				
N	N	N	N	N	N	N	N	N				
PE	PE	PE	PE	PE	PE	PE	PE	PE				
38207 PRC35 MALE	38609 RST25i03 MALE	38608 RST25i03 FEMALE	38608 RST25i03 FEMALE	35776 RST20i03 FEMAL	35776 RST20i03 FEMAL	38608 RST25i03 FEMALE	38608 RST25i03 FEMALE	38608 RST25i03 FEMALE	38616 Cover piece	38616 Cover piece	38616 Cover piece	38616 Cover piece
FROM INV/CHR BRK UNIT	FROM SHORE 2 BRK UNIT	TO GRILL GALLEY	TO GRILL FENDERBOX	TO OUTLETS GROUP 1	TO OUTLETS GROUP 2	TO A/C UNIT 1	TO A/C UNIT 2	TO A/C UNIT 3				

-AC T12aL	-AC T13aN	-AC T14a:PE	-AC T18aL	-AC T19aN	-AC T20a:PE	-AC F12c:2	-AC F12d:4	-AC T21-2:1	-AC F12c:2
-AC F12d:4	-AC T21-3:1	-AC F13c:2	-AC F13d:4	-AC T21-5:1	-AC F14c:2	-AC F14d:4	-AC T21-6:1	-AC F15c:2	-AC F15d:4
-AC T21-7:1	-AC F16c:2	-AC F16d:4	-AC T21-8:1	-AC F17c:2	-AC F17d:4	-AC T21-10:1			
6 H07RN-F BROWN	6 H07RN-F BLUE	6 H07RN-F YELLOW/GREEN	4 H07RN-F BROWN	4 H07RN-F BLUE	4 H07RN-F YELLOW/GREEN	4 H07RN-F BROWN	4 H07RN-F BLUE	4 H07RN-F YELLOW/GREEN	4 H07RN-F BROWN
4 H07RN-F BLUE	4 H07RN-F YELLOW/GREEN	2,5 H07RN-F BROWN	2,5 H07RN-F BLUE	2,5 H07RN-F YELLOW/GREEN	2,5 H07RN-F BROWN	2,5 H07RN-F BLUE	2,5 H07RN-F YELLOW/GREEN	4 H07RN-F BROWN	4 H07RN-F BLUE
4 H07RN-F YELLOW/GREEN	4 H07RN-F BROWN	4 H07RN-F BLUE	4 H07RN-F YELLOW/GREEN	4 H07RN-F BROWN	4 H07RN-F BLUE	4 H07RN-F YELLOW/GREEN			
1300 mm	1300 mm	1100 mm	1100 mm	1100 mm	1100 mm	1100 mm	1100 mm	1100 mm	
22823 1000 mm NW17 PP-MOD BLACK	22823 1000 mm NW17 PP-MOD BLACK	22823 1000 mm NW17 PP-MOD BLACK	22823 1000 mm NW17 PP-MOD BLACK	22822 1000 mm NW13 PP-MOD BLACK	22822 1000 mm NW13 PP-MOD BLACK	22823 1000 mm NW17 PP-MOD BLACK	22823 1000 mm NW17 PP-MOD BLACK	22823 1000 mm NW17 PP-MOD BLACK	
/231.F4	/231.F4	/232.F1	/232.F1	/232.F2	/232.F3	/232.F3	/232.F4	/232.F5	

10.6.2022	TuM	A1: 2003713; INTRODUCED DRAWING.	Date	10.6.2022	NAVIX	Axopar	SEE EXP VIEW	36750	
07.09.2023	TuM/AR	B2: 2004274 SH_X.80, SH_X.81, SH_X82 - SH_X88 ADDED	Drawing by	TuM		Boat	Sub-product code	Product code	Project ID
30.5.2024	TuM	C3: 2005065; Voltage meter AC_V1, 41502 END PIECES added.	Sheet rev.	3		45	STANDARD WARDROBE AC BRK PANEL - EU	HL	233 / 444
Date of modification	Modified by	Description	Project rev.	C	Copyright by	Boat model	Title	Loc	Sheet

EXP VIEW GENERAL

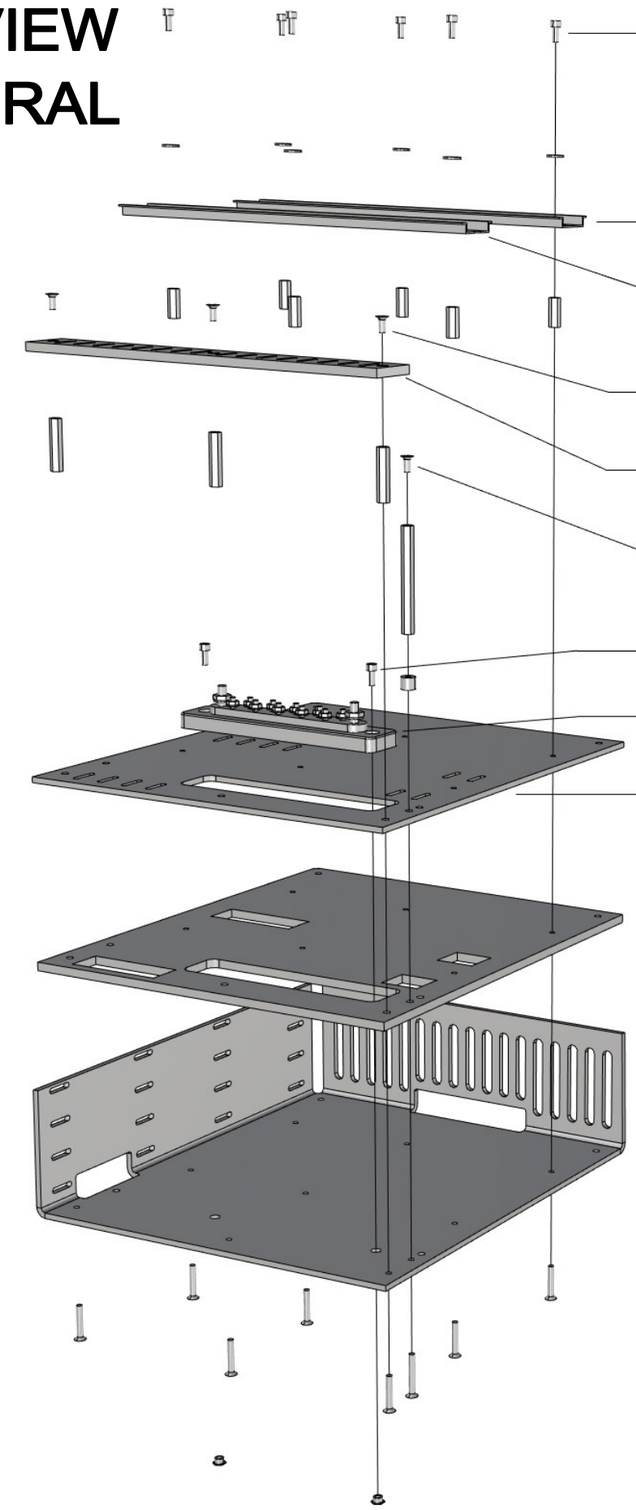

36750_AXOPAR_45_STANDARD_WARDROBE_AC_BRK_PANEL_EU

1. 6PCS VMI30943 HEX SOCKET HEAD CAP SCREW M4X10 DIN912
 6PCS VMI30907 M4 WASHER WITH LARGE OUTSIDE DIAMETER 12MM DIN9021
 6PCS VMI32036 EXTENSION BOLT M4 L-20
 6PCS VMI30919 COUNTERSUNK HEAD SCREW HEX SOCKET M4X25 DIN7991

2. 1PCS DIN_RAIL_270mm

3. 1PCS DIN_RAIL_275mm

4. 3PCS VMI30914 COUNTERSUNK HEAD SCREW HEX SOCKET M4X10 DIN7991
 3PCS VMI32039 EXTENSION BOLT M4 L-35
 3PCS VMI30919 COUNTERSUNK HEAD SCREW HEX SOCKET M4X25 DIN7991

5. 1PC 36444_AXOPAR_45_ZERO_EM_WARDROBE_AC_BRK_PANEL_EU_RACK_V1

6. 1PCS 27022_BOLT_M4X10_HEX_COATED_SOFT_BLACK (TIGHTEN LOOSELY)
 1PCS VMI35429 EXTENSION BOLT M4 L-70
 1PCS 15569_NAVIX_LINE_8mm_SPACER
 1PCS VMI30920 COUNTERSUNK HEAD SCREW HEX SOCKET M4X30 DIN7991

7. 2PCS VMI30943 HEX SOCKET HEAD CAP SCREW M4X10 DIN912
 2PCS 9872 M4 X 4 ETSOS

8. 1PC 28042 - Busbar 10 Gang 150A - Blue Sea 2301

9. 1PC 36443_AXOPAR_45_ZERO_EM_WARDROBE_AC_BRK_PANEL_EU_TOP_V1

10. 1PC 36442_AXOPAR_45_ZERO_EM_WARDROBE_AC_BRK_PANEL_EU_MID_V1

11. 1PC 36441_AXOPAR_45_ZERO_EM_WARDROBE_AC_BRK_PANEL_EU_BACK_V1

11.05.2022 TS

Date of modification	Modified by	Description
10.6.2022	TuM	A1: 2003713; INTRODUCED DRAWING.
07.09.2023	TuM/AR	B2: 2004274 SH_X.80, SH_X.81, SH_X82 - SH_X88 ADDED
30.5.2024	TuM	C3: 2005065; Voltage meter AC_V1, 41502 END PIECES added.

Date	10.6.2022
Drawing by	TuM
Sheet rev.	3
Project rev.	C

Copyright by

NAVIX

Axopar Boat	SEE EXP VIEW Sub-product code	36750 Product code	Project ID
45 Boat model	STANDARD WARDROBE AC BRK PANEL - EU Title	HL Loc	234 / 444 Sheet

SPC TARKASTUSPÖYTÄKIRJA
SPC INSPECTION SHEET

TUOTE TARRA /
PRODUCT LABEL

* PPKKVV-JÄRJESTYSNUMERO / DDMMYY-RUNNING NUMBER (Esim. 11. maaliskuuta 2013 tehty tuote on sarjanumeroltaan 110313-01, seuraava on 110313-02 jne.)

SARJANUMERO* / SERIAL NUMBER*						
JOHDOT KIINNI OIKEIN / CORRECT CONNECTIONS						
MAADOITUS TULEVAT JA LÄHTEVÄT / GROUND CONNECTION IN AND OUT						
VVS JA TOTSIT I-ASENNOSSA / RCBO AND CIRCUIT BREAKERS IN I-POSITION						
ERISTYSVASTUS (mA) max lukema ** / ISOLATION RESISTOR (mA) max **						
MAAPIIRI 10A (Ohm) max lukema ** / GROUND CIRCUIT 10A (Ohm) max **						
TOIMINNALLINEN JA VVS TESTAUS / FUNCTIONAL AND RCBO TEST						
SARJANUMERO TARRA / SERIAL NUMBER STICKER						
PVM / DATE						
TESTASI / TESTED BY						

Tehty CENELEC EN 50106 mukaan / Made according to CENELEC EN 50106

**ERISTYSVASTUS JA MAAPIIRI TESTATTAVA JOKAISEEN SISÄÄNTULOON JA ULOSMENOON / ISOLATION RESISTOR AND GROUND CIRCUIT SHOULD BE TESTED FOR EVERY IN AND OUT

RAJA-ARVOT / LIMITS:

ERISTYSVASTUS / ISOLATING RESISTOR 1000V = <20mA

MAAPIIRI / GROUND CIRCUIT 10A = <0,2 Ohm

Date of modification	Modified by	Description
10.6.2022	TuM	A1: 2003713; INTRODUCED DRAWING.
07.09.2023	TuM/AR	B2: 2004274 SH_X.80, SH_X.81, SH_X82 - SH_X88 ADDED
30.5.2024	TuM	C3: 2005065; Voltage meter AC_V1, 41502 END PIECES added.

Date 10.6.2022
Drawing by TuM
Sheet rev. 3
Project rev. C

Copyright by NAVIX

Boat: Axopar
Boat model: 45
Sub-product code: SEE EXP VIEW
Product code: 36750
Project ID:
Title: STANDARD WARDROBE AC BRK PANEL - EU
HL:
Loc:
Sheet: 235 / 444

GENERAL LAYOUT & LABELS
WIRE ROUTES / CABLE TIES

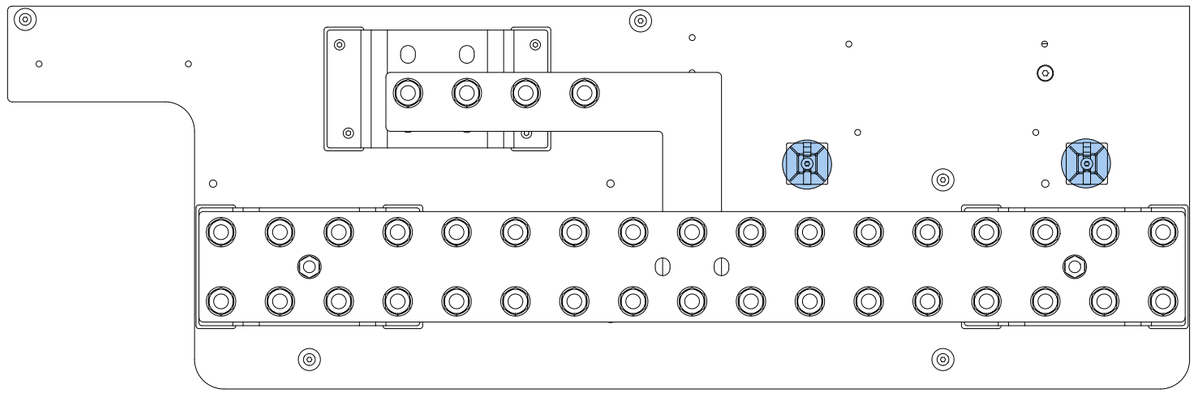

COVER LABEL INSTALLATION

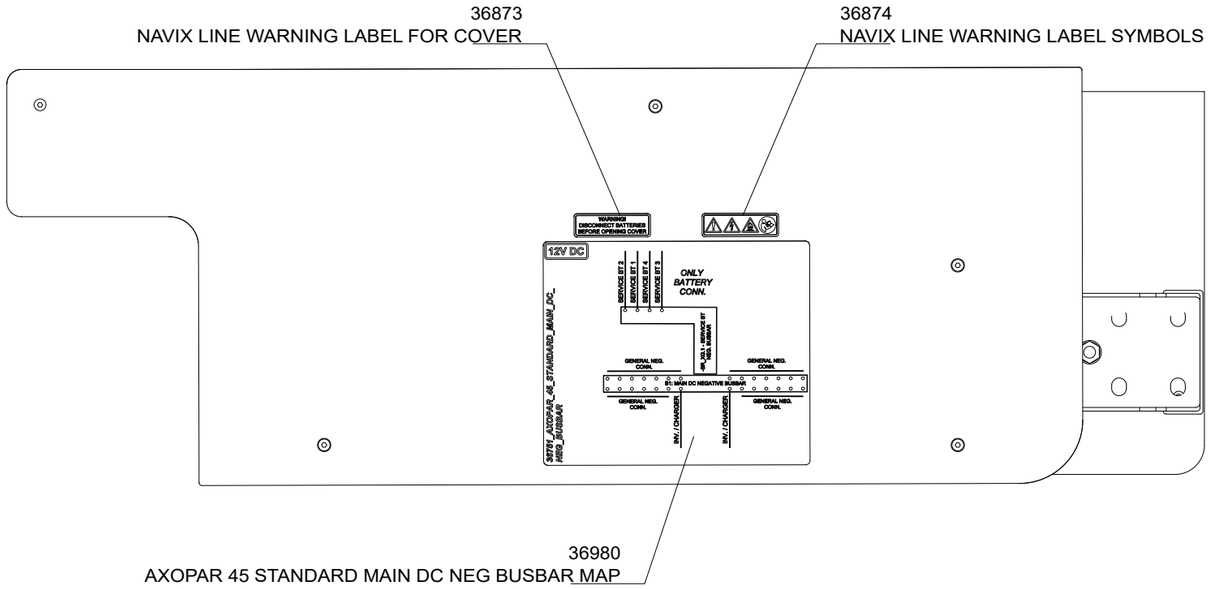

Cable tie mount
VMI36559

4.7.2022	TuM	A1: 2003713; INTRODUCED DRAWING.	Date 4.7.2022	Copyright by NAVIX	Axopar	SEE EXP VIEW	36751	
3.5.2023	RK	B1: 2004274; NOT MODIFIED.	Drawing by TuM		Boat	Sub-product code	Product code	Project ID
6.6.2024	TuM	C1: 2005065; NOT MODIFIED.	Sheet rev. 1		45	STANDARD MAIN DC NEG BUSBAR	HL	236 / 444
Date of modification	Modified by	Description	Project rev. C		Boat model	Title	Loc	Sheet

EXP VIEW

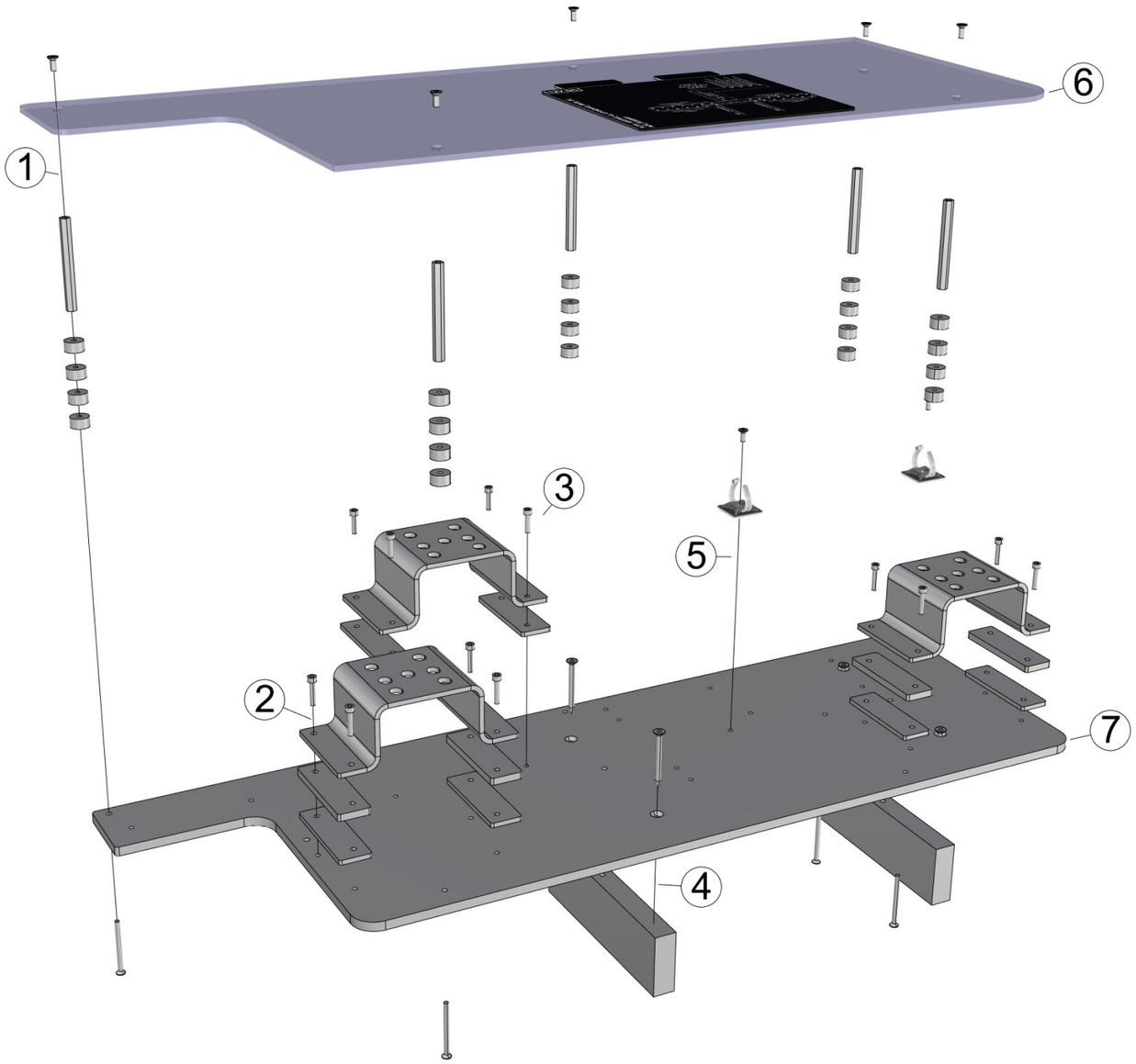

36751_AXOPAR_45_STANDARD_MAIN_DC_NEG_BUSBAR

1. 5PCS VMI30914 COUNTERSUNK HEAD SCREW HEX SOCKET M4X10 DIN7991
   5PCS VMI35429 EXTENSION BOLT M4 L-70
   20PCS 29063_NAVIX_LINE_8MM_WASHER_V1
   5PCS VMI30921 COUNTERSUNK HEAD SCREW HEX SOCKET M4X50 DIN7991

2. 8PCS VMI30946 HEX SOCKET HEAD CAP SCREW M4X20 DIN912
   2PCS 36837_AXOPAR_45_ZERO_EM_MAIN_DC_NEG_BUSBAR_BRACKET_V1
   4PCS 36838_AXOPAR_45_ZERO_EM_MAIN_DC_NEG_BUSBAR_RISER_6MM_V1
   4PCS 36839_AXOPAR_45_ZERO_EM_MAIN_DC_NEG_BUSBAR_RISER_4MM_V1

3. 4PCS VMI30945 HEX SOCKET HEAD CAP SCREW M4X16 DIN912
   1PCS 36837_AXOPAR_45_ZERO_EM_MAIN_DC_NEG_BUSBAR_BRACKET_V1
   2PCS 36839_AXOPAR_45_ZERO_EM_MAIN_DC_NEG_BUSBAR_RISER_4MM_V1

4. 4PCS VMI30951 COUNTERSUNK HEAD SCREW TX A4 4,8X50 DIN 7982
   2PCS 36840_AXOPAR_45_ZERO_EM_MAIN_DC_NEG_BUSBAR_LEG_V1

5. 2PCS VMI30914 COUNTERSUNK HEAD SCREW HEX SOCKET M4X10 DIN7991
   - ZIPTIE AND -HOLDER (AS IN DIAGRAM) -

6. 1PC 36835_AXOPAR_45_ZERO_EM_MAIN_DC_NEG_BUSBAR_COVER_V1
   + LABELS (AS IN DIAGRAM)

7. 1PC 36836_AXOPAR_45_ZERO_EM_MAIN_DC_NEG_BUSBAR_BASE_V1

Date of modification	Modified by	Description
4.7.2022	TuM	A1: 2003713; INTRODUCED DRAWING.
3.5.2023	RK	B1: 2004274; NOT MODIFIED.
6.6.2024	TuM	C1: 2005065; NOT MODIFIED.

Date	4.7.2022
Drawing by	TuM
Sheet rev.	1
Project rev.	C

Copyright by

NAVIX

Axopar Boat	SEE EXP VIEW Sub-product code	36751 Product code	Project ID
45 Boat model	STANDARD MAIN DC NEG BUSBAR Title	HL Loc	237 / 444 Sheet

EXP VIEW

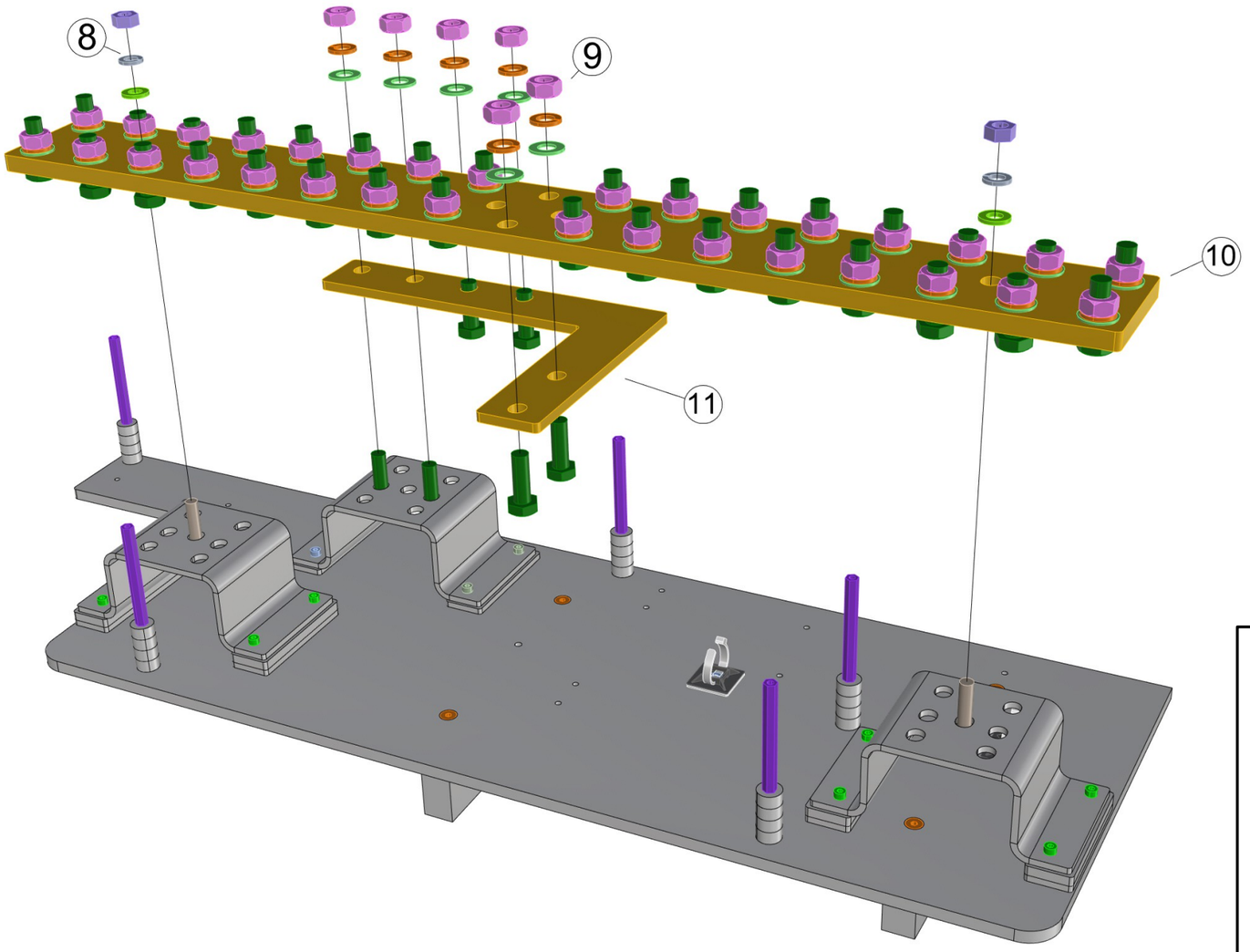

8. 2PCS VMI32012 HEX NUT M8 DIN934
   2PCS VMI32011 SPRING LOCK WASHER M8 DIN127
   2PCS VMI32013 FLAT WASHER FOR HEX BOLTS AND NUTS M8 DIN125A
   2PCS VMI32019 HEX BOLT FULL THREAD M8X30 DIN933

9. 38PCS VMI32010 HEX NUT M10 DIN934
   38PCS VMI32008 SPRING LOCK WASHER M10 DIN127
   38PCS VMI32009 FLAT WASHER FOR HEX BOLTS AND NUTS M10 DIN125A
   38PCS VMI32024 HEX BOLT FULL THREAD M10X30 DIN933

10. 1PC 36985_NAVIX_LINE_BUSBAR_LARGE_34X_V1

11. 1PC 36986_AXOPAR_45_MAIN_DC_NEG_BUSBAR_L_SMALL_V1

9.6.2022 / TS
10.1.2023 / TS

ASSEMBLED PANEL

(WITHOUT WIRING)

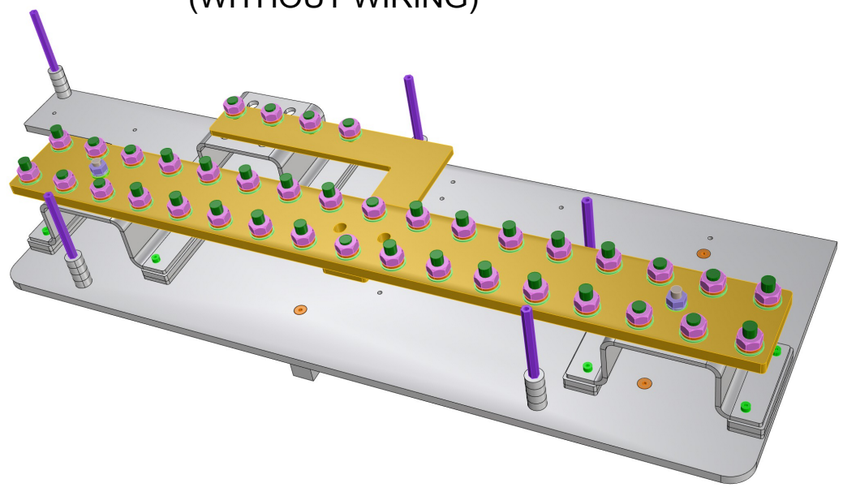

Date of modification	Modified by	Description
4.7.2022	TuM	A1: 2003713; INTRODUCED DRAWING.
3.5.2023	RK	B1: 2004274; NOT MODIFIED.
6.6.2024	TuM	C1: 2005065; NOT MODIFIED.

Date	4.7.2022
Drawing by	TuM
Sheet rev.	1
Project rev.	C

Copyright by

NAVIX

Axopar Boat	SEE EXP VIEW Sub-product code	36751 Product code	Project ID	
45 Boat model	STANDARD MAIN DC NEG BUSBAR Title	HL Loc	238 / 444 Sheet	

GENERAL LAYOUT & LABELS
WIRE ROUTES / CABLE TIES

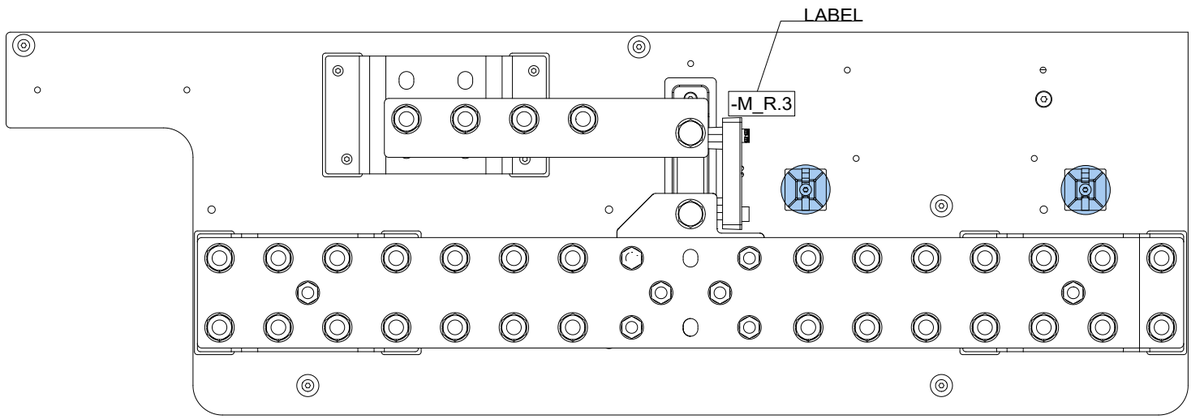

COVER LABEL INSTALLATION

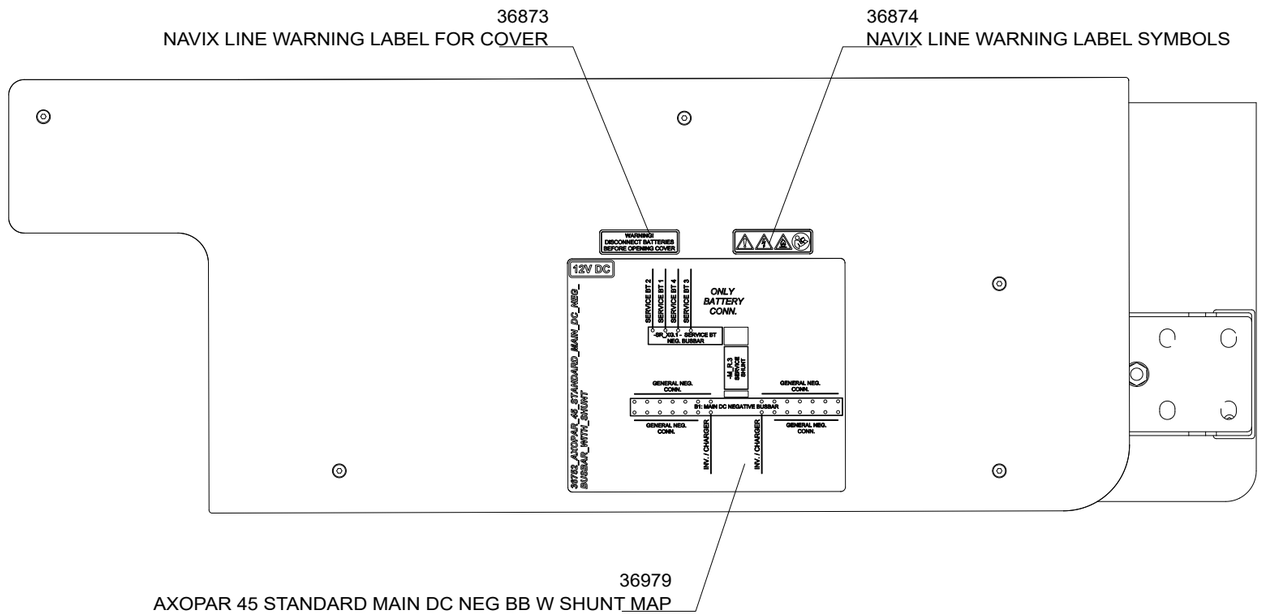

Cable tie mount
VMI36559

6.7.2022	TuM	A1: 2003713; INTRODUCED DRAWING.	Date 6.7.2022	NAVIX	Axopar	SEE EXP VIEW	36752	
3.5.2023	RK	B1: 2004274; NOT MODIFIED.	Drawing by TuM		Boat	Sub-product code	Product code	Project ID
6.6.2024	TuM	C1: 2005065; NOT MODIFIED.	Sheet rev. 1		45	STANDARD MAIN DC NEG BUSBAR WITH SHUNT	HL	239 / 444
Date of modification	Modified by	Description	Project rev. C	Copyright by	Boat model	Title	Loc	Sheet

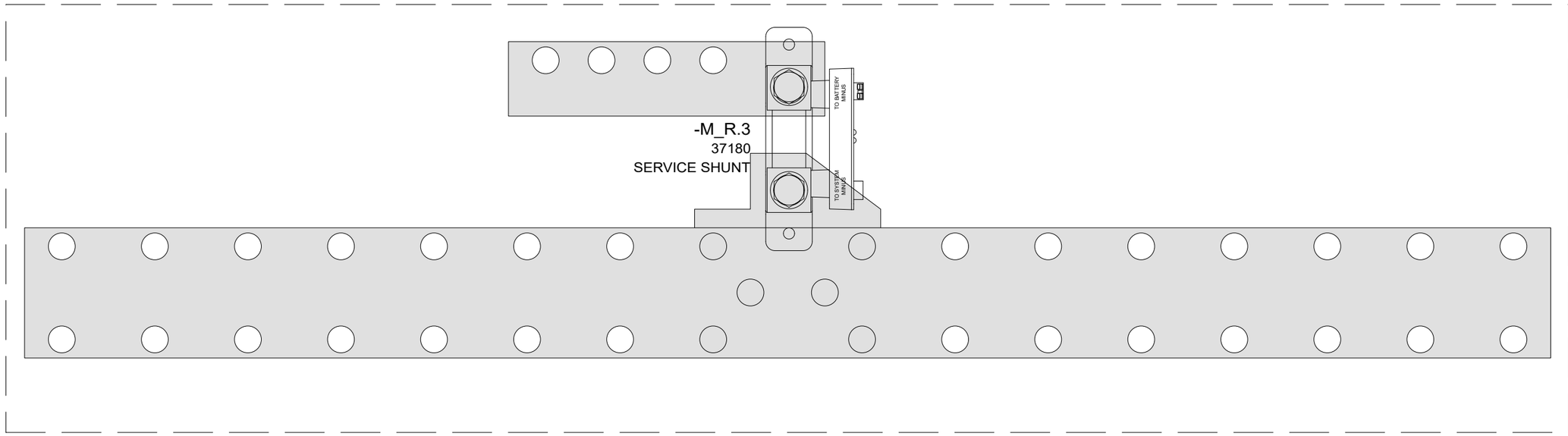

6.7.2022	TuM	A1: 2003713; INTRODUCED DRAWING.	Date 6.7.2022	NAVIX	Axopar	SEE EXP VIEW	36752	
3.5.2023	RK	B1: 2004274; NOT MODIFIED.	Drawing by TuM		Boat	Sub-product code	Product code	Project ID
6.6.2024	TuM	C1: 2005065; NOT MODIFIED.	Sheet rev. 1		45	STANDARD MAIN DC NEG BUSBAR WITH SHUNT	HL	240 / 444
Date of modification	Modified by	Description	Project rev. C	Copyright by	Boat model	Title	Loc	Sheet

EXP VIEW

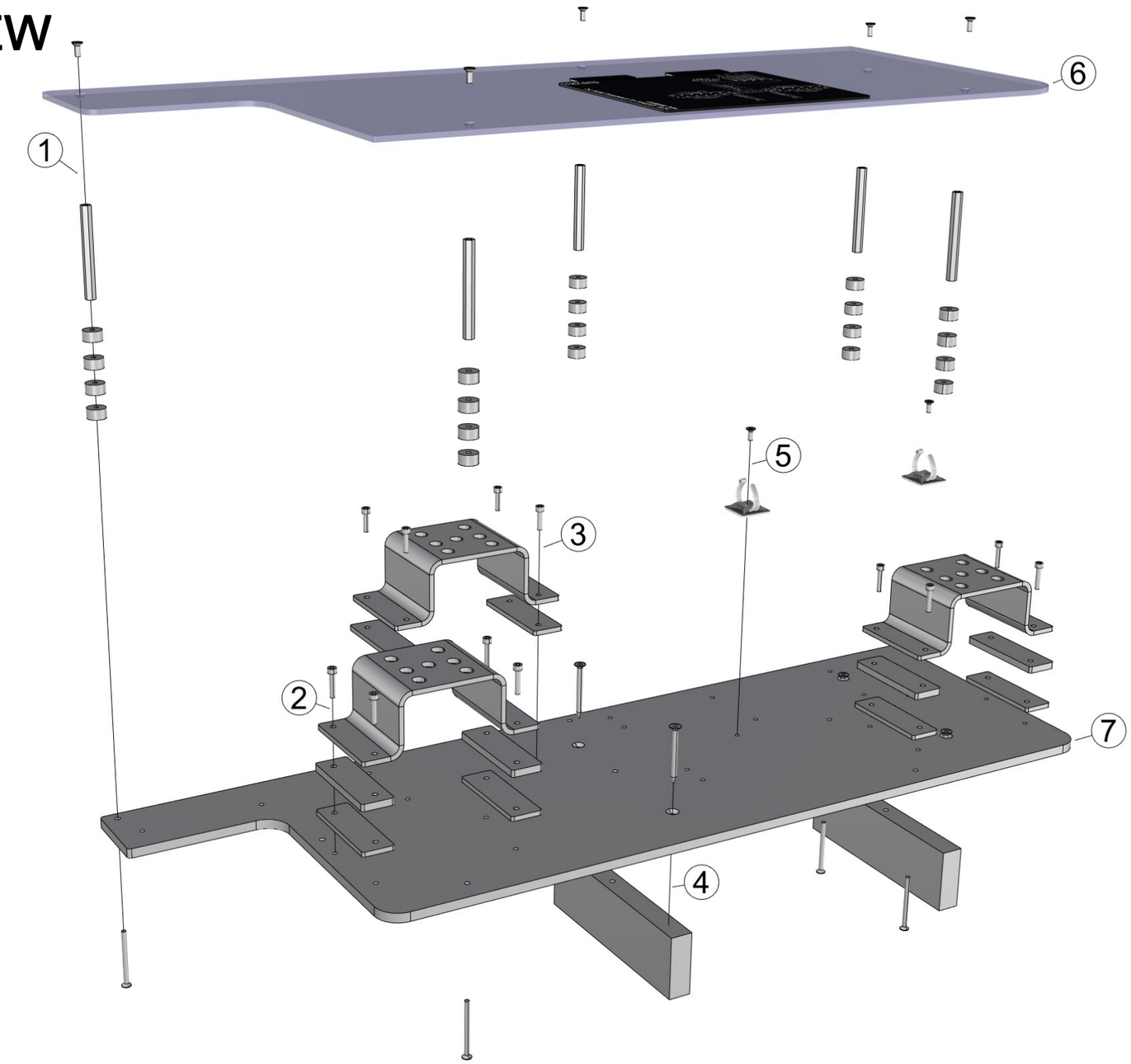

36752_AXOPAR_45_STANDARD_MAIN_DC_NEG_BUSBAR_WITH_SHUNT

1. 5PCS VMI30914 COUNTERSUNK HEAD SCREW HEX SOCKET M4X10 DIN7991
   5PCS VMI35429 EXTENSION BOLT M4 L-70
   20PCS 29063_NAVIX_LINE_8MM_WASHER_V1
   5PCS VMI30921 COUNTERSUNK HEAD SCREW HEX SOCKET M4X50 DIN7991

2. 8PCS VMI30946 HEX SOCKET HEAD CAP SCREW M4X20 DIN912
   2PCS 36837_AXOPAR_45_ZERO_EM_MAIN_DC_NEG_BUSBAR_BRACKET_V1
   4PCS 36838_AXOPAR_45_ZERO_EM_MAIN_DC_NEG_BUSBAR_RISER_6MM_V1
   4PCS 36839_AXOPAR_45_ZERO_EM_MAIN_DC_NEG_BUSBAR_RISER_4MM_V1

3. 4PCS VMI30945 HEX SOCKET HEAD CAP SCREW M4X16 DIN912
   1PCS 36837_AXOPAR_45_ZERO_EM_MAIN_DC_NEG_BUSBAR_BRACKET_V1
   2PCS 36839_AXOPAR_45_ZERO_EM_MAIN_DC_NEG_BUSBAR_RISER_4MM_V1

4. 4PCS VMI30951 COUNTERSUNK HEAD SCREW TX A4 4,8X50 DIN 7982
   2PCS 36840_AXOPAR_45_ZERO_EM_MAIN_DC_NEG_BUSBAR_LEG_V1

5. 2PCS VMI30914 COUNTERSUNK HEAD SCREW HEX SOCKET M4X10 DIN7991
   - ZIPTIE AND -HOLDER (AS IN DIAGRAM) -

6. 1PC 36835_AXOPAR_45_ZERO_EM_MAIN_DC_NEG_BUSBAR_COVER_V1
   + LABELS (AS IN DIAGRAM)

7. 1PC 36836_AXOPAR_45_ZERO_EM_MAIN_DC_NEG_BUSBAR_BASE_V1

Date of modification	Modified by	Description
6.7.2022	TuM	A1: 2003713; INTRODUCED DRAWING.
3.5.2023	RK	B1: 2004274; NOT MODIFIED.
6.6.2024	TuM	C1: 2005065; NOT MODIFIED.

Date 6.7.2022
Drawing by TuM
Sheet rev. 1
Project rev. C

Copyright by

NAVIX

Boat: Axopar
Boat model: 45
Sub-product code: SEE EXP VIEW
Product code: 36752
Project ID:
Title: STANDARD MAIN DC NEG BUSBAR WITH SHUNT
Loc: HL
Sheet: 241/ 444

EXP VIEW

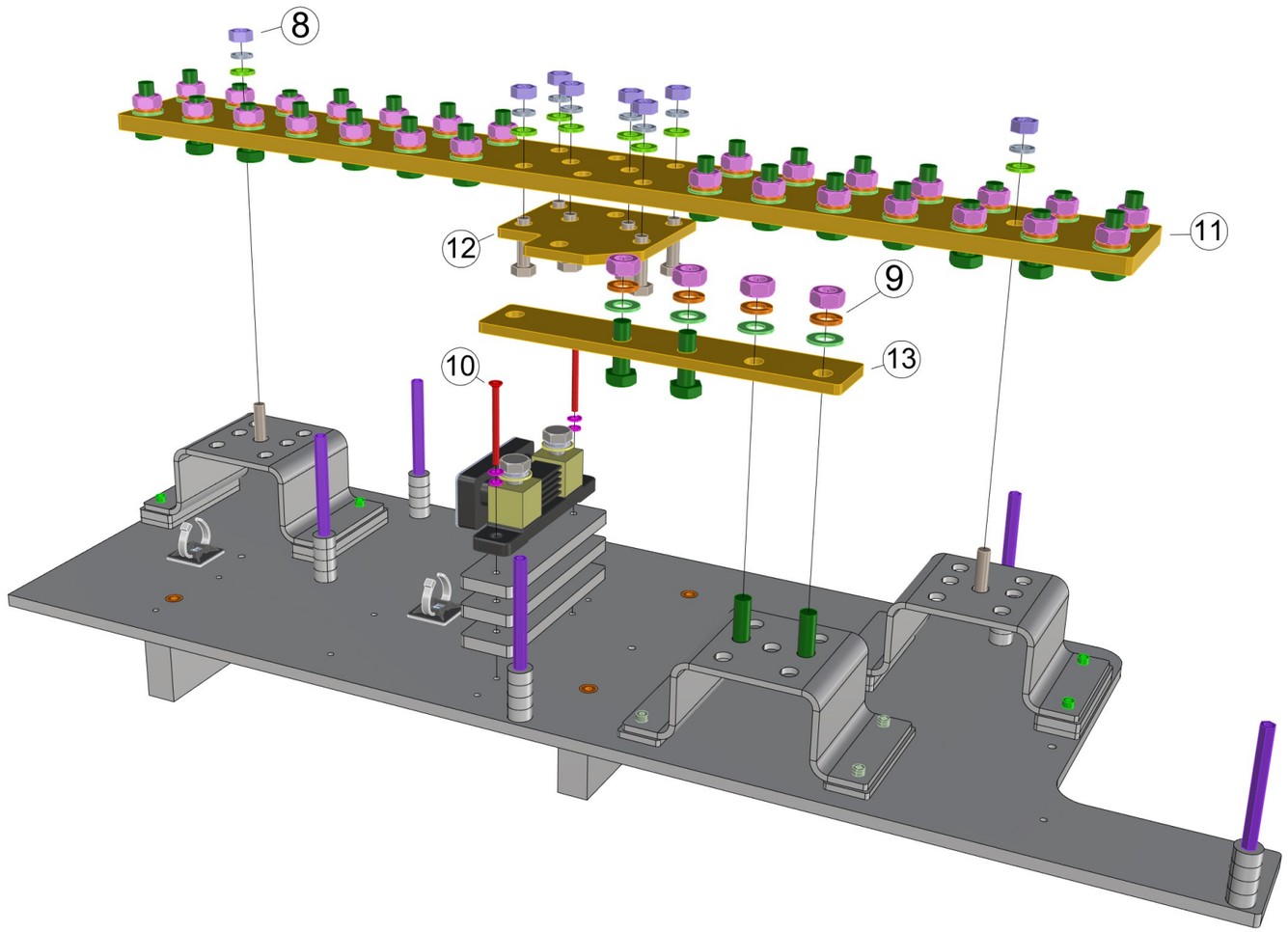

8. 8PCS VMI32012 HEX NUT M8 DIN934
   8PCS VMI32011 SPRING LOCK WASHER M8 DIN127
   8PCS VMI32013 FLAT WASHER FOR HEX BOLTS AND NUTS M8 DIN125A
   8PCS VMI32019 HEX BOLT FULL THREAD M8X30 DIN933

9. 32PCS VMI32010 HEX NUT M10 DIN934
   32PCS VMI32008 SPRING LOCK WASHER M10 DIN127
   32PCS VMI32009 FLAT WASHER FOR HEX BOLTS AND NUTS M10 DIN125A
   32PCS VMI32024 HEX BOLT FULL THREAD M10X30 DIN933

10. 2PCS VMI30921 COUNTERSUNK HEAD SCREW HEX SOCKET M4X50 DIN7991
    2PCS VMI30904 SPRING LOCK WASHER M4 DIN127
    2PCS VMI30906 FLAT WASHER FOR HEX BOLTS AND NUTS M4 DIN125A

! SHUNT AS IN DIAGRAM !

3PCS 36992_AXOPAR_45_ZERO_EM_MAIN_DC_NEG_BUSBAR_RISER_8MM_V1

11. 1PC 36985_NAVIX_LINE_BUSBAR_LARGE_34X_V1

12. 1PC 36987_AXOPAR_45_MAIN_DC_NEG_BUSBAR_C_V1

13. 36988_AXOPAR_45_MAIN_DC_NEG_BUSBAR_STANDARD_V1

10.6.2022 / TS
10.1.2023 / TS

ASSEMBLED PANEL

(WITHOUT WIRING)

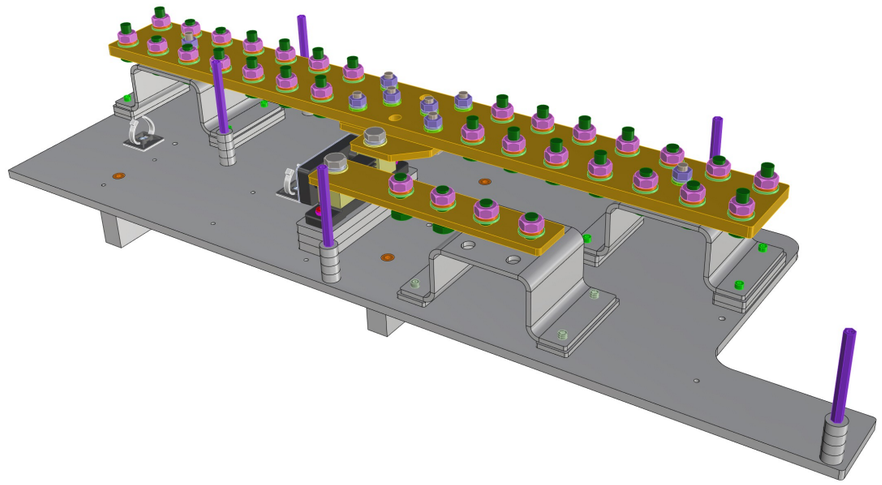

Date of modification	Modified by	Description		
6.7.2022	TuM	A1: 2003713; INTRODUCED DRAWING.	Date	6.7.2022
3.5.2023	RK	B1: 2004274; NOT MODIFIED.	Drawing by	TuM
6.6.2024	TuM	C1: 2005065; NOT MODIFIED.	Sheet rev.	1
			Project rev.	C

Copyright by

NAVIX

Boat	Sub-product code	Product code	Project ID
Axopar	SEE EXP VIEW	36752	
Boat model	Title	Loc	Sheet
45	STANDARD MAIN DC NEG BUSBAR WITH SHUNT	HL	242 / 444

GENERAL LAYOUT & LABELS
WIRE ROUTES / CABLE TIES

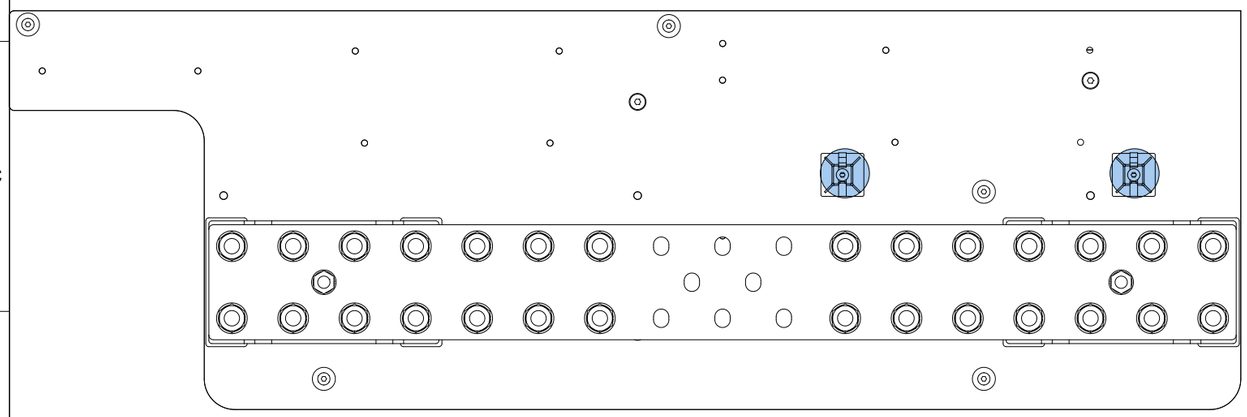

COVER LABEL INSTALLATION

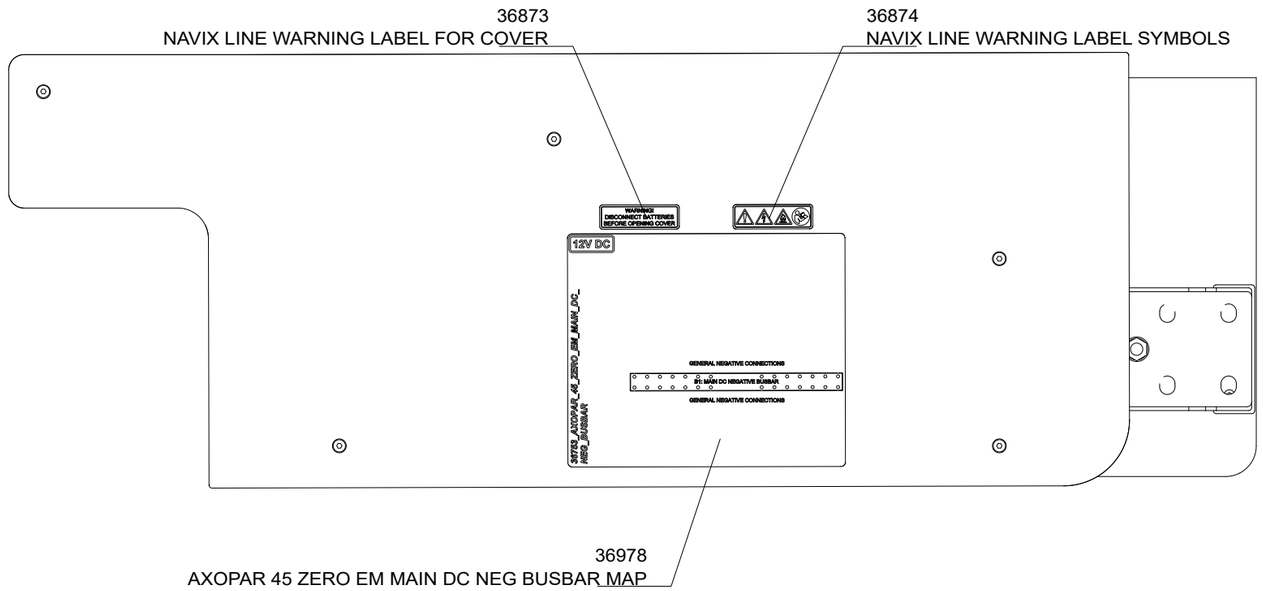

Cable tie mount
VMI36559

Date of modification	Modified by	Description					
4.7.2022	TuM	A1: 2003713; INTRODUCED DRAWING.	Date	4.7.2022	Axopar	SEE EXP VIEW	36753
3.5.2023	RK	B1: 2004274; NOT MODIFIED.	Drawing by	TuM	Boat	Sub-product code	Product code
6.6.2024	TuM	C2: 2004998; SEPARATE BATTERY CONECTION REMOVED.	Sheet rev.	2	45	ZERO EM MAIN DC NEG BUSBAR	HL
			Project rev.	C	Boat model	Title	Loc

Copyright by

NAVIX

Project ID

243 / 444
Sheet

EXP VIEW

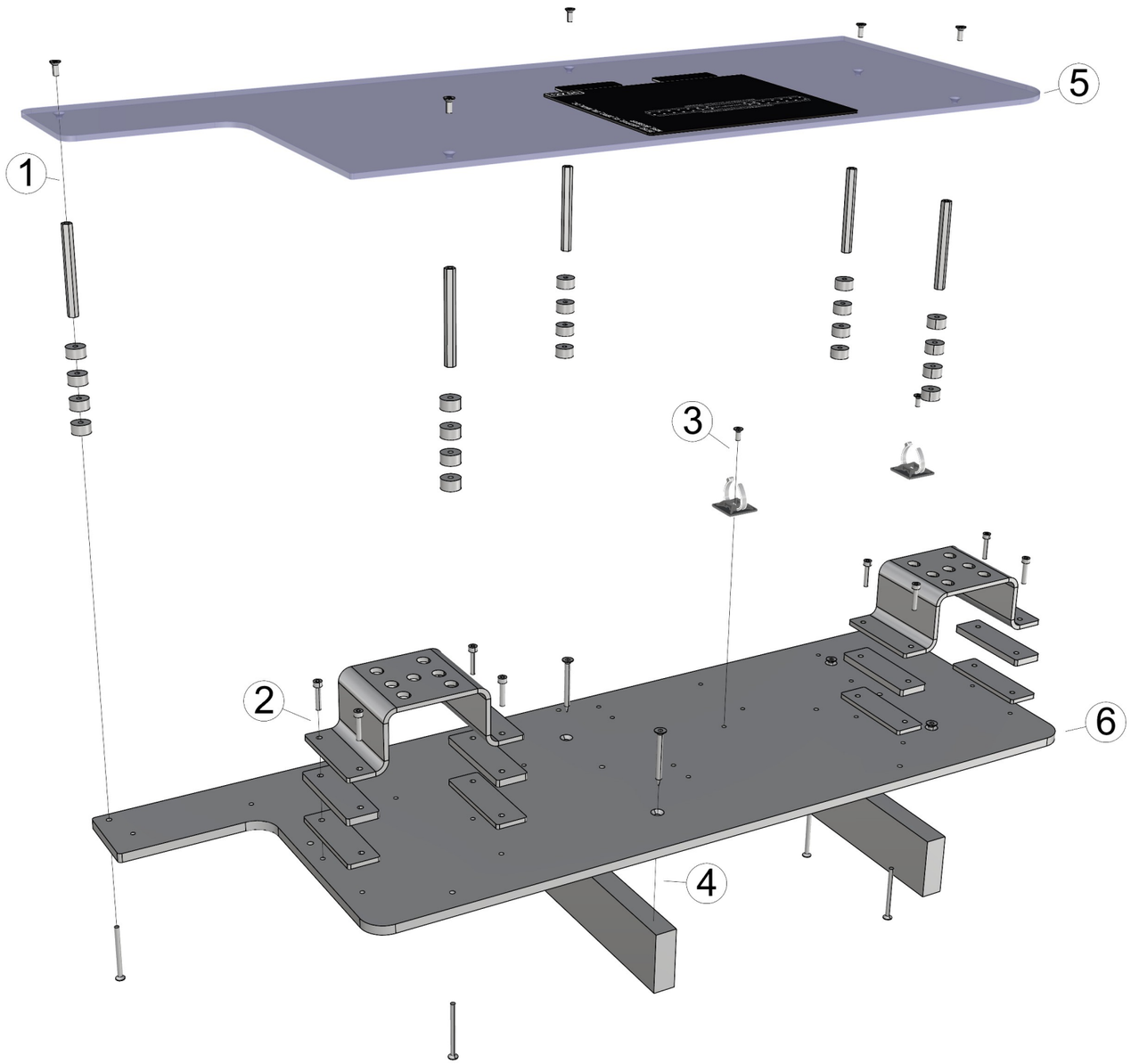

36753_AXOPAR_45_ZERO_EM_MAIN_DC_NEG_BUSBAR

1. 5PCS VMI30914 COUNTERSUNK HEAD SCREW HEX SOCKET M4X10 DIN7991
   5PCS VMI35429 EXTENSION BOLT M4 L-70
   20PCS 29063_NAVIX_LINE_8MM_WASHER_V1
   5PCS VMI30921 COUNTERSUNK HEAD SCREW HEX SOCKET M4X50 DIN7991

2. 8PCS VMI30946 HEX SOCKET HEAD CAP SCREW M4X20 DIN912
   2PCS 36837_AXOPAR_45_ZERO_EM_MAIN_DC_NEG_BUSBAR_BRACKET_V1
   4PCS 36838_AXOPAR_45_ZERO_EM_MAIN_DC_NEG_BUSBAR_RISER_6MM_V1
   4PCS 36839_AXOPAR_45_ZERO_EM_MAIN_DC_NEG_BUSBAR_RISER_4MM_V1

3. 2PCS VMI30914 COUNTERSUNK HEAD SCREW HEX SOCKET M4X10 DIN7991
   - ZIPTIE AND -HOLDER (AS IN DIAGRAM) -

4. 4PCS VMI30951 COUNTERSUNK HEAD SCREW TX A4 4,8X50 DIN 7982
   2PCS 36840_AXOPAR_45_ZERO_EM_MAIN_DC_NEG_BUSBAR_LEG_V1

5. 1PC 36835_AXOPAR_45_ZERO_EM_MAIN_DC_NEG_BUSBAR_COVER_V1
   + LABELS (AS IN DIAGRAM)

6. 1PC 36836_AXOPAR_45_ZERO_EM_MAIN_DC_NEG_BUSBAR_BASE_V1

Date of modification	Modified by	Description
4.7.2022	TuM	A1: 2003713; INTRODUCED DRAWING.
3.5.2023	RK	B1: 2004274; NOT MODIFIED.
6.6.2024	TuM	C2: 2004998; SEPARATE BATTERY CONECTION REMOVED.

Date	4.7.2022
Drawing by	TuM
Sheet rev.	2
Project rev.	C

Copyright by

NAVIX

Axopar Boat	SEE EXP VIEW Sub-product code	36753 Product code	Project ID
45 Boat model	ZERO EM MAIN DC NEG BUSBAR Title	HL Loc	244 / 444 Sheet

EXP VIEW

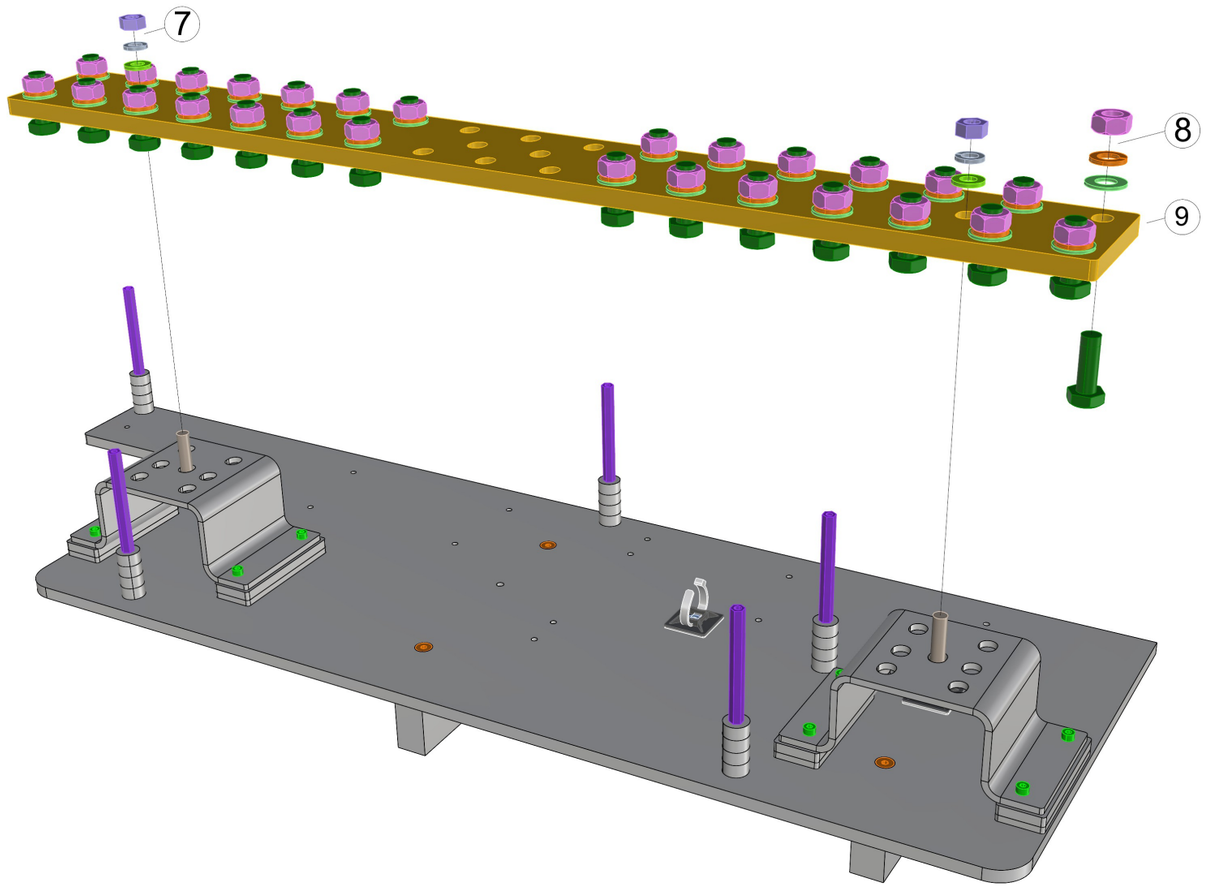

7. 2PCS VMI32012 HEX NUT M8 DIN934
   2PCS VMI32011 SPRING LOCK WASHER M8 DIN127
   2PCS VMI32013 FLAT WASHER FOR HEX BOLTS AND NUTS M8 DIN125A
   2PCS VMI32019 HEX BOLT FULL THREAD M8X30 DIN933

8. 28PCS VMI32010 HEX NUT M10 DIN934
   28PCS VMI32008 SPRING LOCK WASHER M10 DIN127
   28PCS VMI32009 FLAT WASHER FOR HEX BOLTS AND NUTS M10 DIN125A
   28PCS VMI32024 HEX BOLT FULL THREAD M10X30 DIN933

9. 1PC 36985_NAVIX_LINE_BUSBAR_LARGE_34X_V1

10.6.2022 / TS
10.1.2023 / TS
05.6.2024 / HH

ASSEMBLED PANEL

(WITHOUT WIRING)

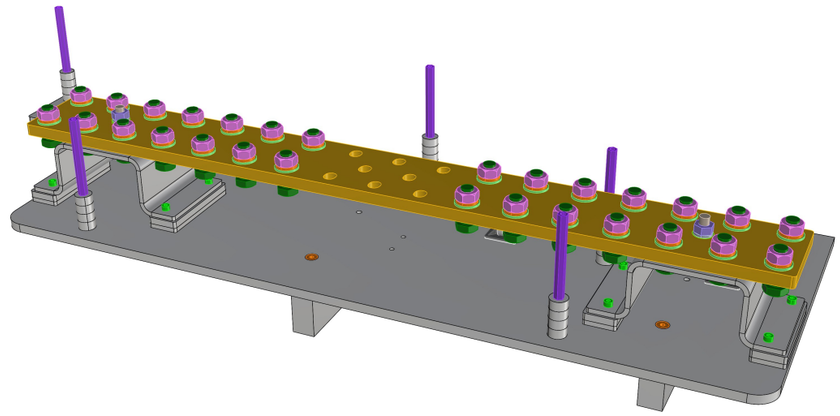

Date of modification	Modified by	Description
4.7.2022	TuM	A1: 2003713; INTRODUCED DRAWING.
3.5.2023	RK	B1: 2004274; NOT MODIFIED.
6.6.2024	TuM	C2: 2004998; SEPARATE BATTERY CONECTION REMOVED.

Date	4.7.2022
Drawing by	TuM
Sheet rev.	2
Project rev.	C

Copyright by

NAVIX

Axopar Boat	SEE EXP VIEW Sub-product code	36753 Product code	Project ID
45 Boat model	ZERO EM MAIN DC NEG BUSBAR Title	HL Loc	245 / 444 Sheet

GENERAL LAYOUT & LABELS
WIRE ROUTES / CABLE TIES

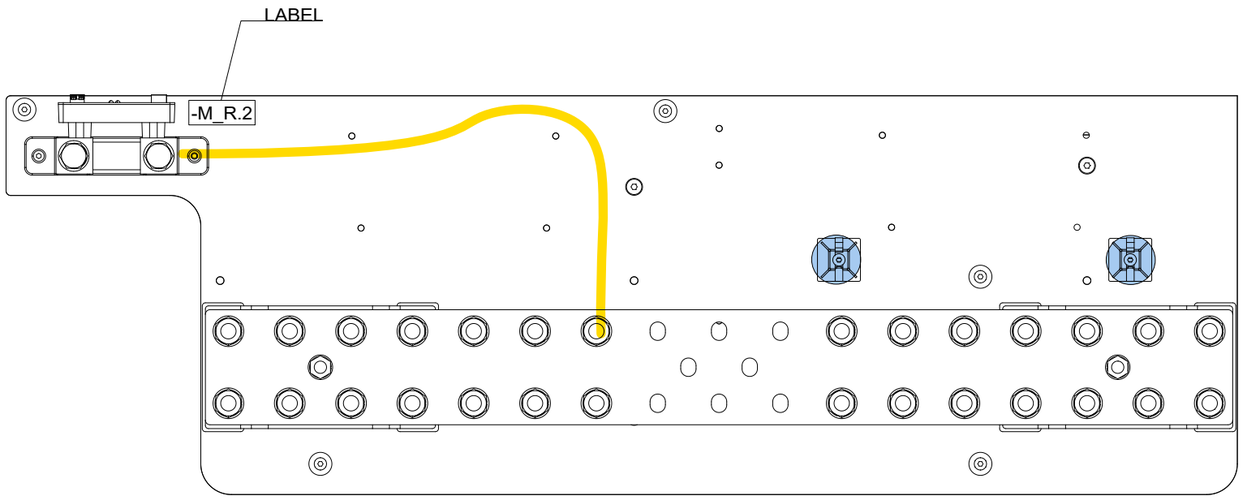

COVER LABEL INSTALLATION

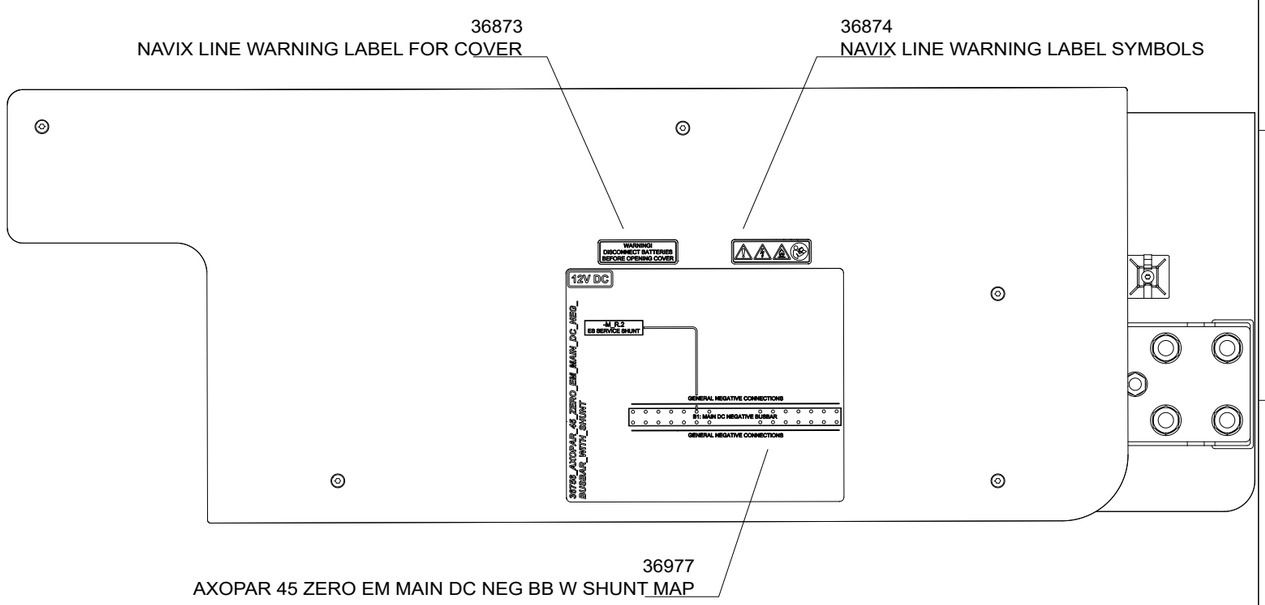

Cable tie mount
VMI36559

Date of modification	Modified by	Description		
7.7.2022	TuM	A1: 2003713; INTRODUCED DRAWING.	Date	7.7.2022
3.5.2023	RK	B1: 2004274; NOT MODIFIED.	Drawing by	TuM
6.6.2024	TuM	C2: 2004498; 1000A Shunt (M_R.1) REMOVED	Sheet rev.	2
			Project rev.	C

Copyright by

NAVIX

Boat	Sub-product code	Product code	Project ID
Axopar	SEE EXP VIEW	36756	

Boat model	Title		Sheet
45	ZERO EM MAIN DC NEG BUSBAR WITH SHUNT	HL / Loc	246 / 444

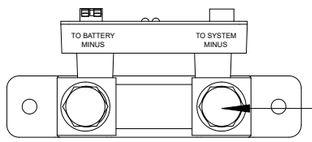

-M_R2c#1
ES SERV. SHUNT: SYS MINUS
10 ESS_SERV_BT- -B1-5:1
120/10

120 YELLOW
380 mm

-M_R.2
37180
ES SERVICE SHUNT

-B1-5#1
MAIN DC NEG. BUSBAR
10 ESS_SERV_BT- -M R2c:SYS-
120/10

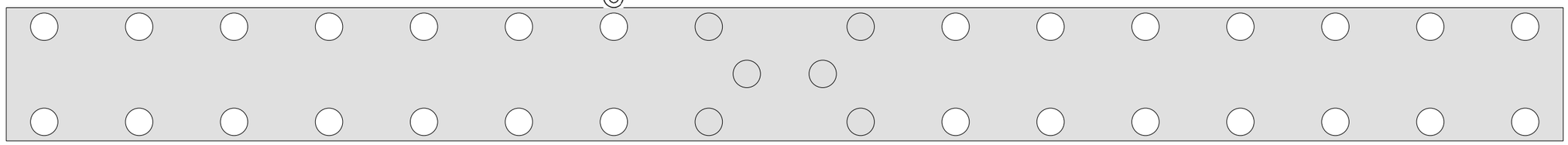

7.7.2022	TuM	A1: 2003713; INTRODUCED DRAWING.	Date 7.7.2022	NAVIX	Axopar	SEE EXP VIEW	36756		
3.5.2023	RK	B1: 2004274; NOT MODIFIED.	Drawing by TuM		Boat	Sub-product code	Product code	Project ID	
6.6.2024	TuM	C2: 2004498; 1000A Shunt (M_R.1) REMOVED	Sheet rev. 2		45	ZERO EM MAIN DC NEG BUSBAR WITH SHUNT	HL	247 / 444	
Date of modification	Modified by	Description	Project rev. C	Copyright by	Boat model	Title	Loc	Sheet	

EXP VIEW

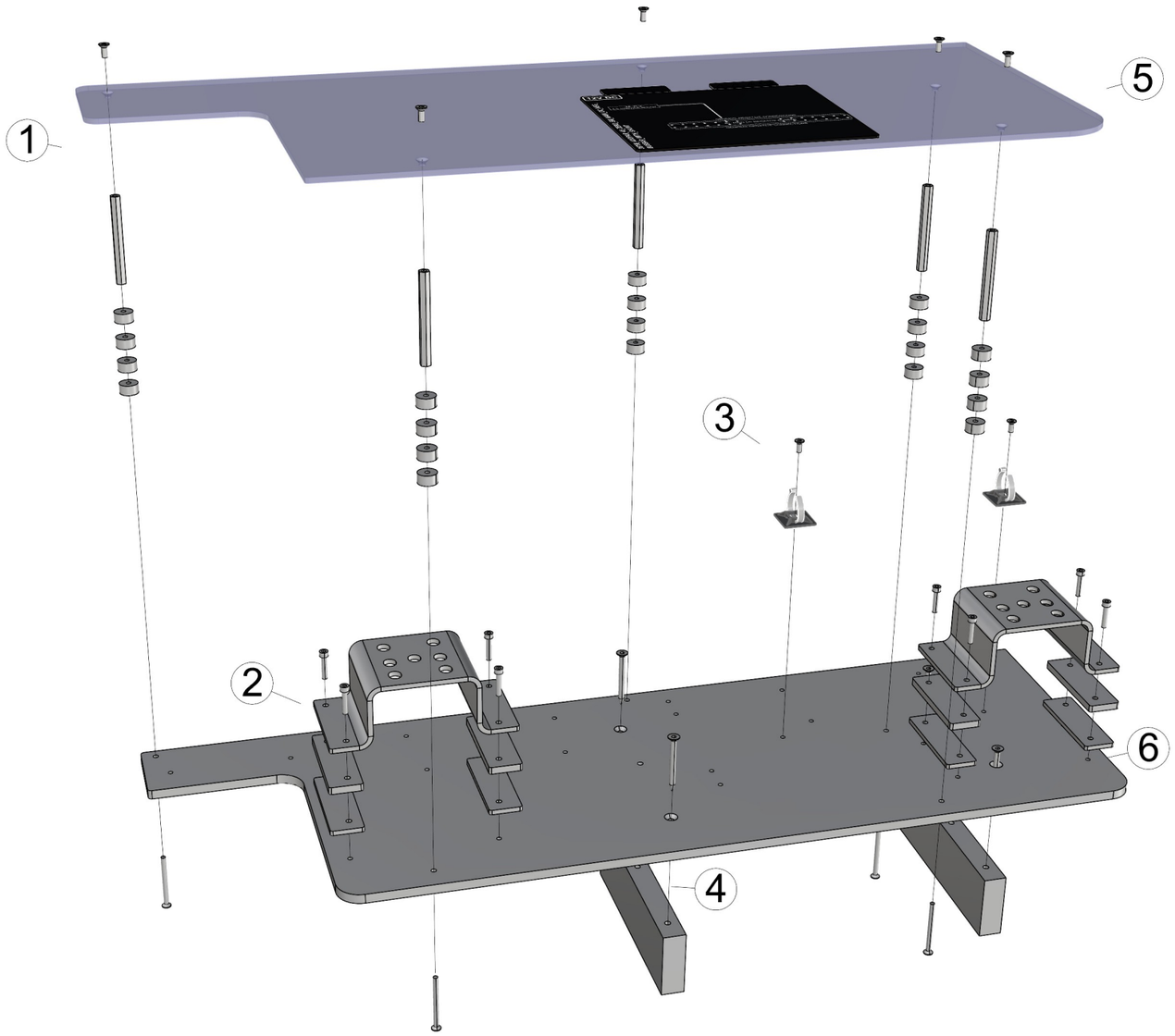

36756_AXOPAR_45_ZERO_EM_MAIN_DC_NEG_BUSBAR_WITH_SHUNT

1. 5PCS VMI30914 COUNTERSUNK HEAD SCREW HEX SOCKET M4X10 DIN7991
   5PCS VMI35429 EXTENSION BOLT M4 L-70
   20PCS 29063_NAVIX_LINE_8MM_WASHER_V1
   5PCS VMI30921 COUNTERSUNK HEAD SCREW HEX SOCKET M4X50 DIN7991

2. 8PCS VMI30946 HEX SOCKET HEAD CAP SCREW M4X20 DIN912
   2PCS 36837_AXOPAR_45_ZERO_EM_MAIN_DC_NEG_BUSBAR_BRACKET_V1
   4PCS 36838_AXOPAR_45_ZERO_EM_MAIN_DC_NEG_BUSBAR_RISER_6MM_V1
   4PCS 36839_AXOPAR_45_ZERO_EM_MAIN_DC_NEG_BUSBAR_RISER_4MM_V1

3. 2PCS VMI30914 COUNTERSUNK HEAD SCREW HEX SOCKET M4X10 DIN7991
   - ZIPTIE AND -HOLDER (AS IN DIAGRAM) -

4. 4PCS VMI30951 COUNTERSUNK HEAD SCREW TX A4 4,8X50 DIN 7982
   2PCS 36840_AXOPAR_45_ZERO_EM_MAIN_DC_NEG_BUSBAR_LEG_V1

5. 1PC 36835_AXOPAR_45_ZERO_EM_MAIN_DC_NEG_BUSBAR_COVER_V1
   + LABELS (AS IN DIAGRAM)

6. 1PC 36836_AXOPAR_45_ZERO_EM_MAIN_DC_NEG_BUSBAR_BASE_V1

Date of modification	Modified by	Description
7.7.2022	TuM	A1: 2003713; INTRODUCED DRAWING.
3.5.2023	RK	B1: 2004274; NOT MODIFIED.
6.6.2024	TuM	C2: 2004498; 1000A Shunt (M_R.1) REMOVED

Date	7.7.2022
Drawing by	TuM
Sheet rev.	2
Project rev.	C

Copyright by

NAVIX

Axopar Boat	SEE EXP VIEW Sub-product code	36756 Product code	Project ID
45 Boat model	ZERO EM MAIN DC NEG BUSBAR WITH SHUNT Title	HL Loc	248 / 444 Sheet

EXP VIEW

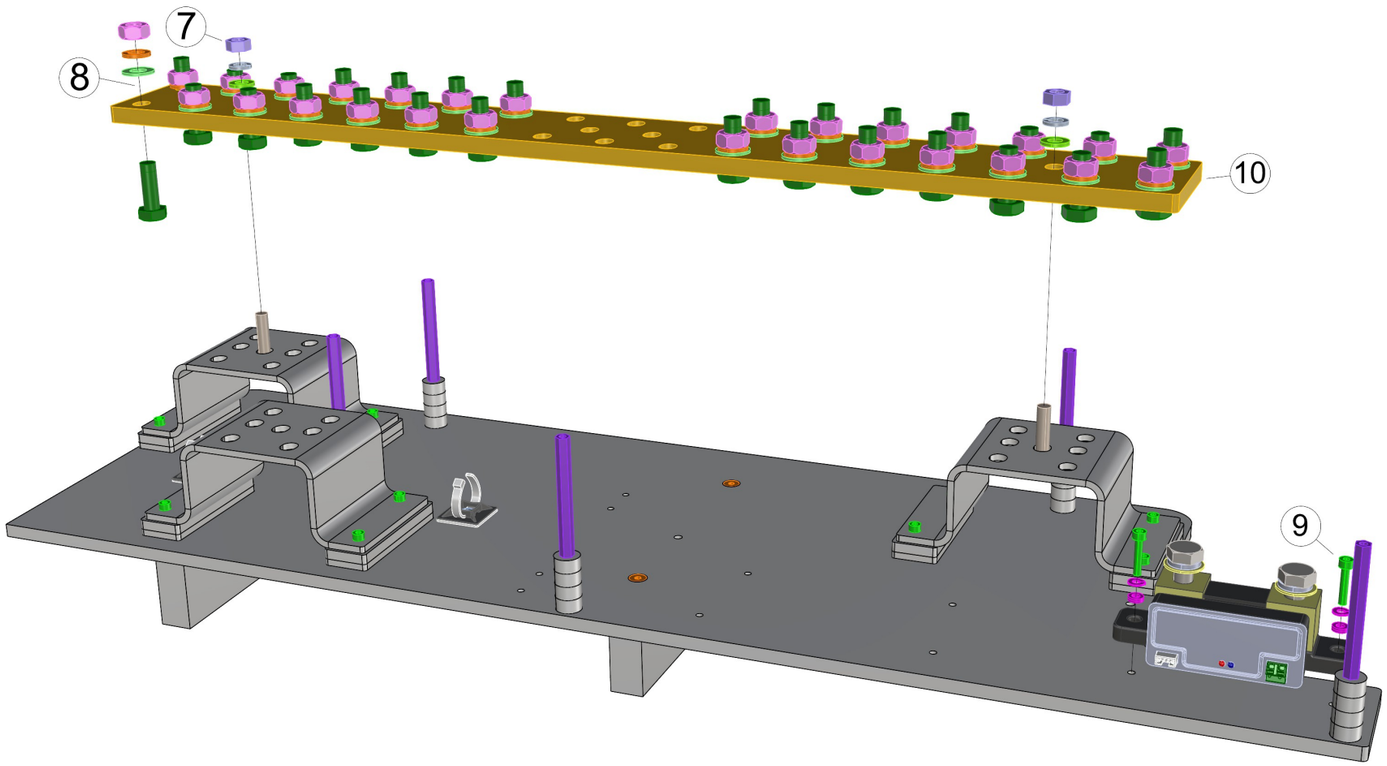

7. 2PCS VMI32012 HEX NUT M8 DIN934
   2PCS VMI32011 SPRING LOCK WASHER M8 DIN127
   2PCS VMI32013 FLAT WASHER FOR HEX BOLTS AND NUTS M8 DIN125A
   2PCS VMI32019 HEX BOLT FULL THREAD M8X30 DIN933

8. 28PCS VMI32010 HEX NUT M10 DIN934
   28PCS VMI32008 SPRING LOCK WASHER M10 DIN127
   28PCS VMI32009 FLAT WASHER FOR HEX BOLTS AND NUTS M10 DIN125A
   28PCS VMI32024 HEX BOLT FULL THREAD M10X30 DIN933

9. 2PCS VMI30946 HEX SOCKET HEAD CAP SCREW M4X20 DIN912
   2PCS VMI30904 SPRING LOCK WASHER M4 DIN127
   2PCS VMI30906 FLAT WASHER FOR HEX BOLTS AND NUTS M4 DIN125A

! SHUNT AS IN DIAGRAM !

10. 1PC 36985_NAVIX_LINE_BUSBAR_LARGE_34X_V1

10.6.2022 / TS
10.1.2023 / TS
06.6.2024 / HH

ASSEMBLED PANEL

(WITHOUT WIRING)

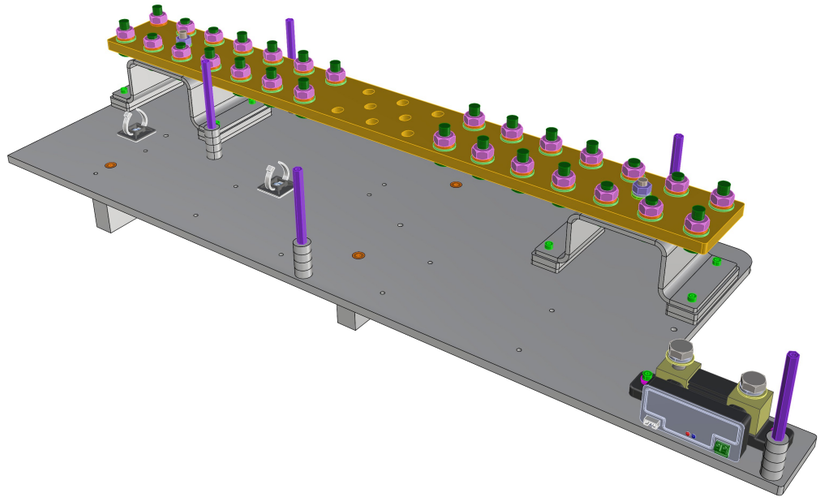

Date of modification	Modified by	Description
7.7.2022	TuM	A1: 2003713; INTRODUCED DRAWING.
3.5.2023	RK	B1: 2004274; NOT MODIFIED.
6.6.2024	TuM	C2: 2004498; 1000A Shunt (M_R.1) REMOVED

Date	7.7.2022
Drawing by	TuM
Sheet rev.	2
Project rev.	C

Copyright by

NAVIX

Axopar Boat	SEE EXP VIEW Sub-product code	36756 Product code	Project ID
45 Boat model	ZERO EM MAIN DC NEG BUSBAR WITH SHUNT Title	HL Loc	249 / 444 Sheet

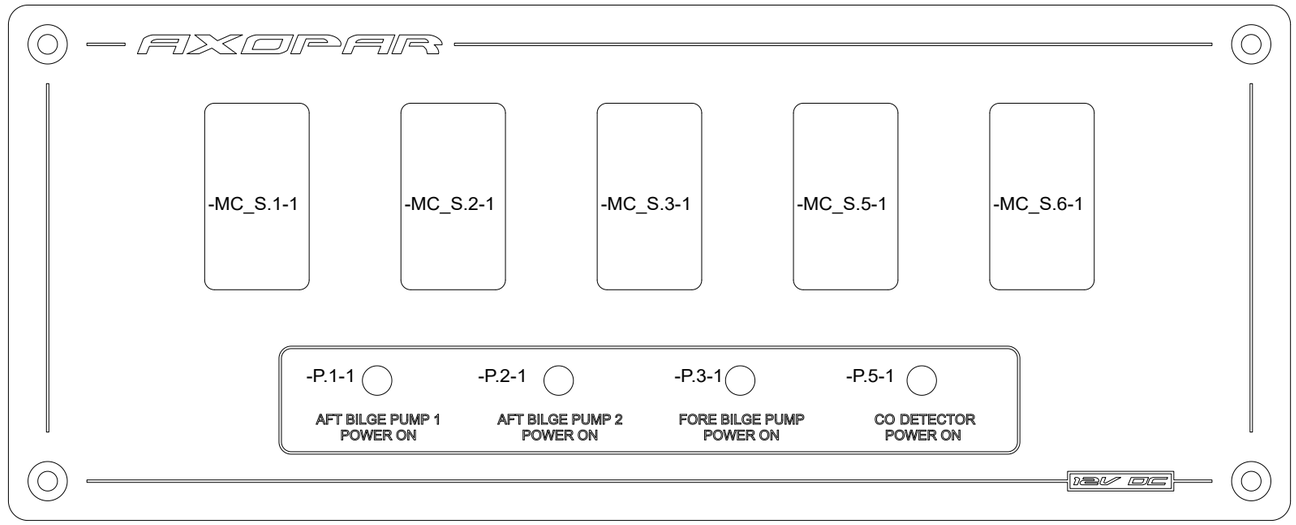

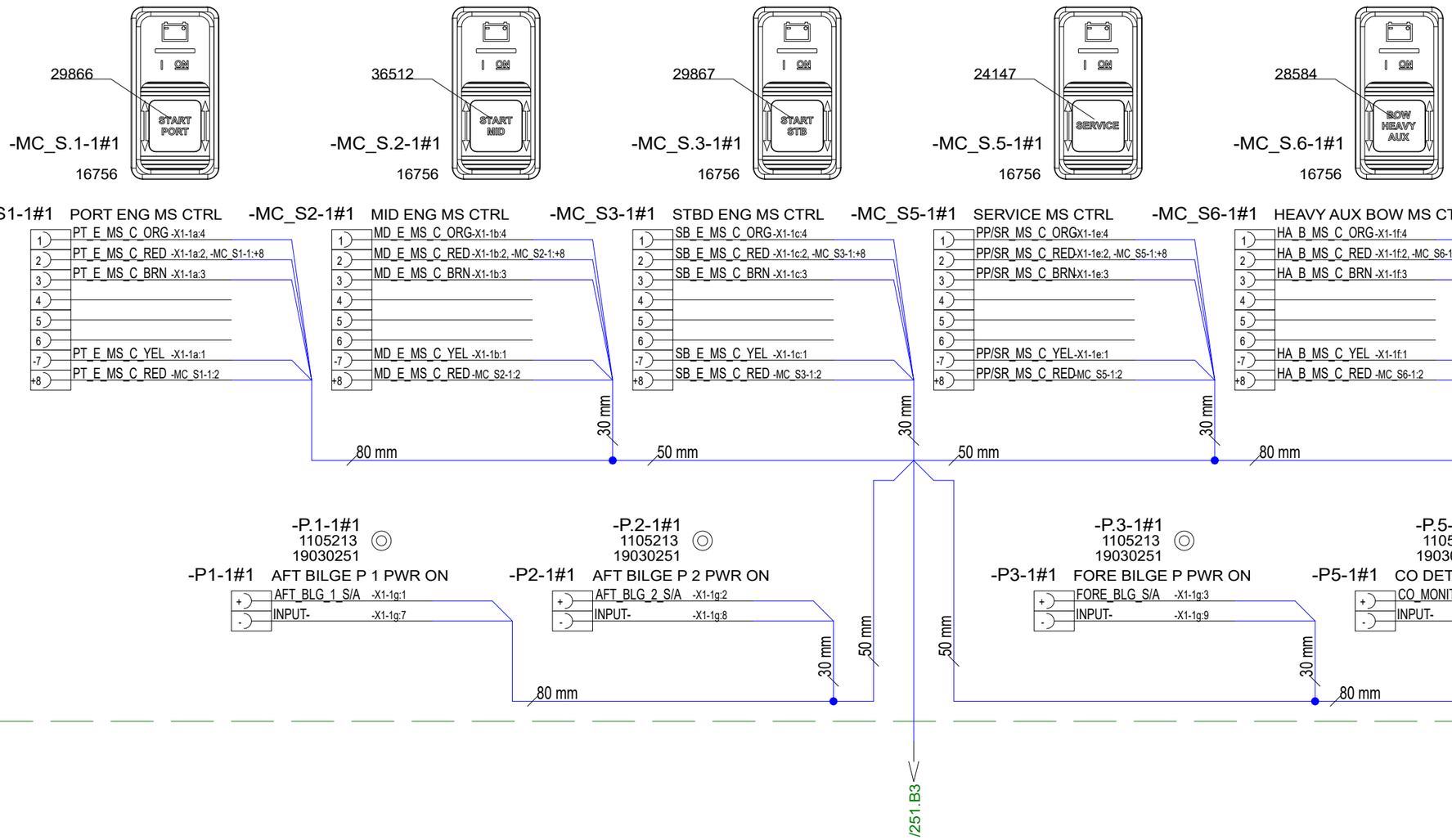

Date of modification	Modified by	Description
11.5.2022	TuM	A1: 2003713; INTRODUCED DRAWING.
5.5.2023	RK	B1: 2004274; NOT MODIFIED.
31.5.2024	TuM	C1: 2005065; NOT MODIFIED.

Date	11.5.2022
Drawing by	TuM
Sheet rev.	1
Project rev.	C

Copyright by

Axopar Boat	36868 Sub-product code	36757 Product code	Project ID
45 Boat model	MAIN SW UNIT CONTROL PANEL - STANDARD Title	HL Loc	250 / 444 Sheet

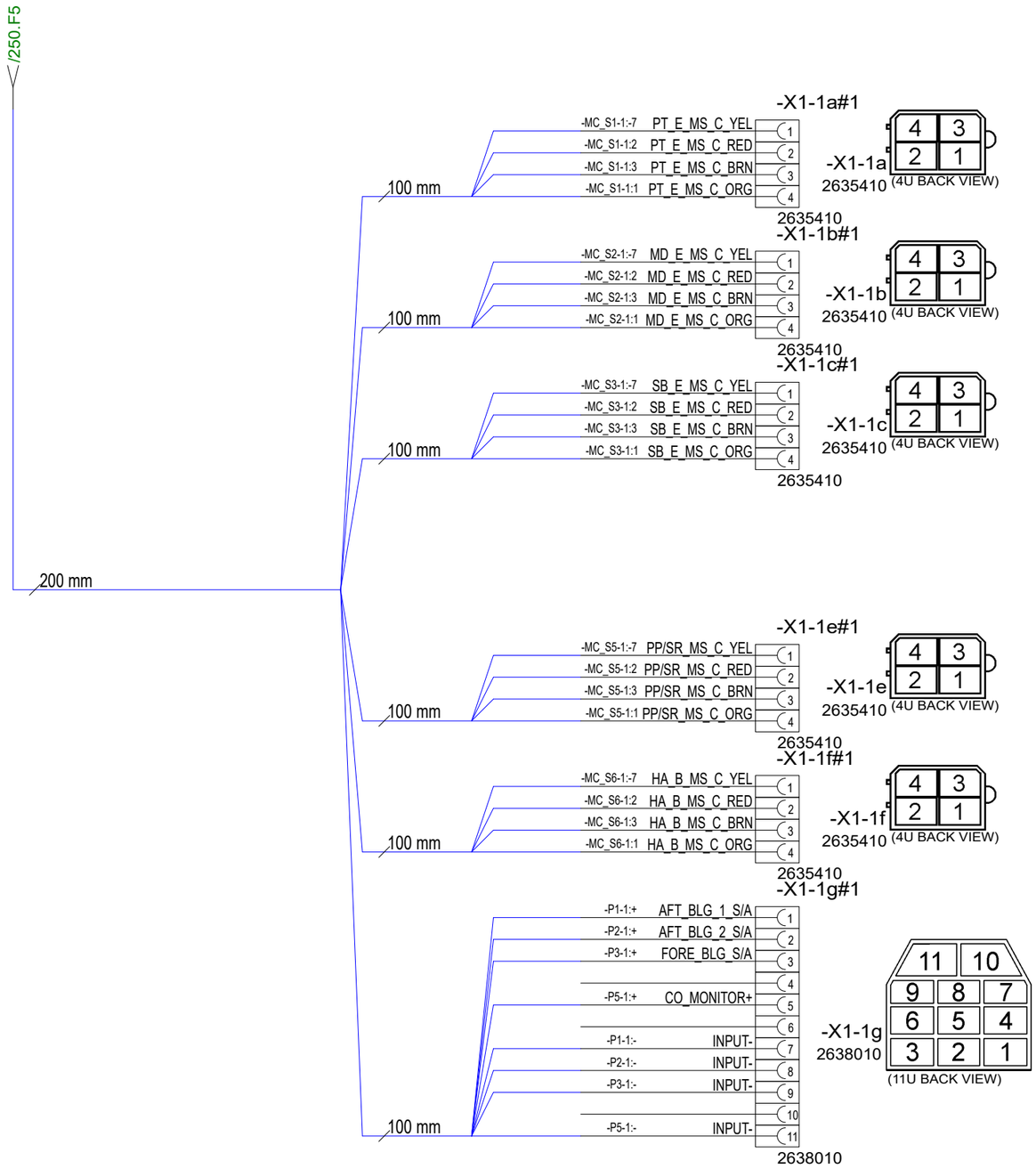

11.5.2022	TuM	A1: 2003713; INTRODUCED DRAWING.	Date	11.5.2022	NAVIX	Axopar	36868	36757	
5.5.2023	RK	B1: 2004274; NOT MODIFIED.	Drawing by	TuM		Boat	Sub-product code	Product code	Project ID
31.5.2024	TuM	C1: 2005065; NOT MODIFIED.	Sheet rev.	1		45	MAIN SW UNIT	HL	
Date of modification	Modified by	Description	Project rev.	C	Copyright by	Boat model	CONTROL PANEL - STANDARD	Loc	251/ 444
							Title		Sheet

GENERAL LAYOUT/ LABEL INSTALLATION

WITHOUT COVER

ENCLOSURE:
18114 (12-mod)

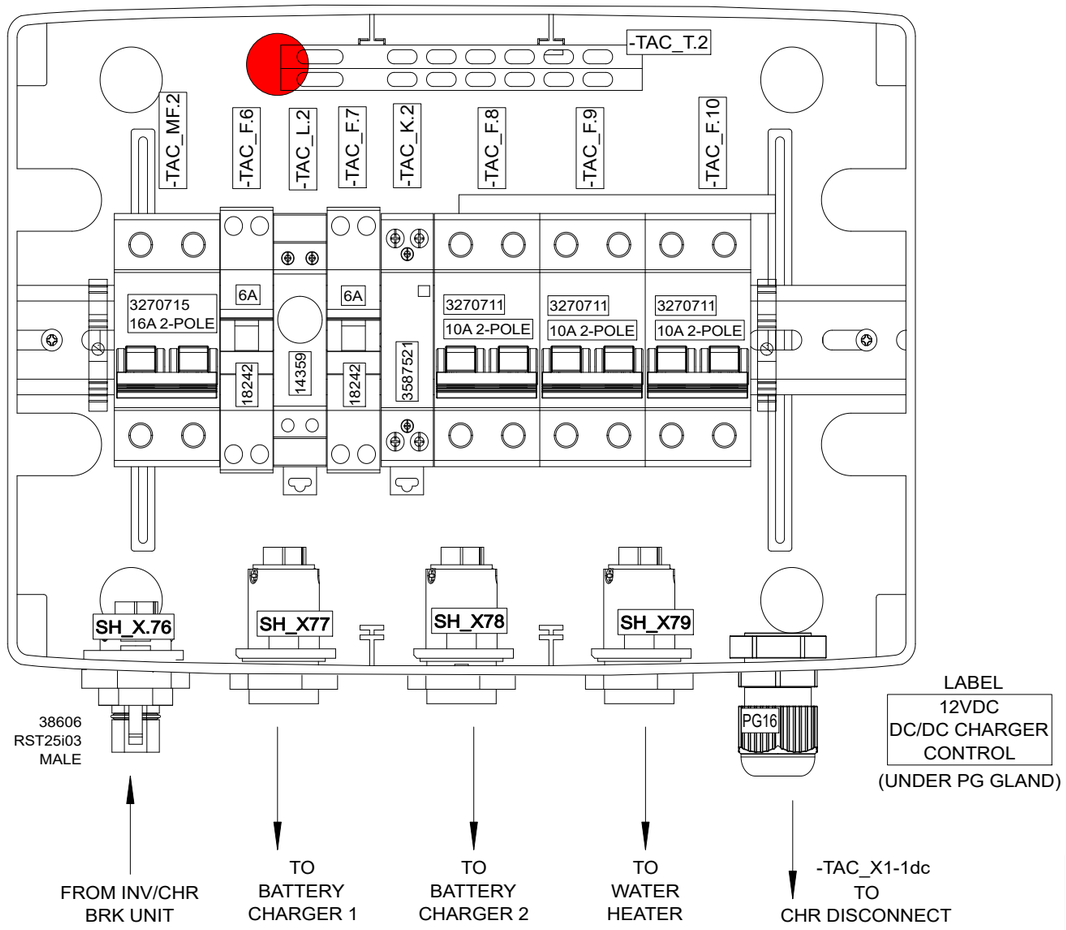

WITH COVER

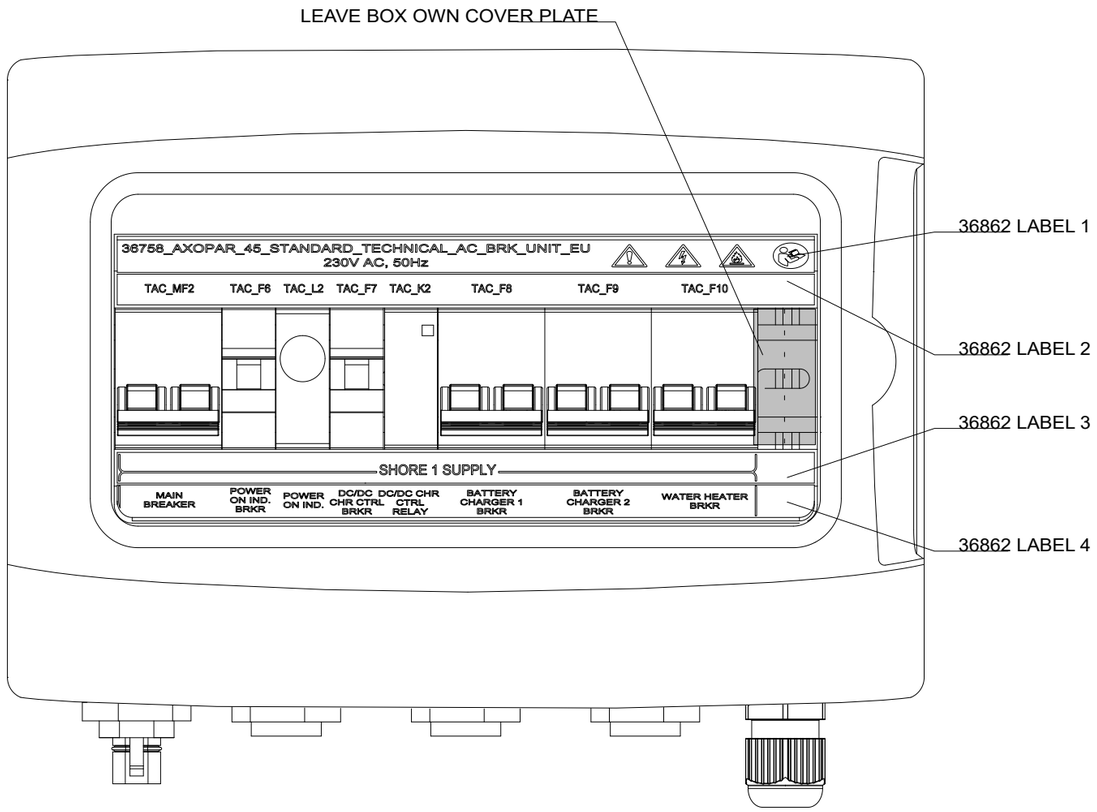

INCLUDED TO DELIVERY

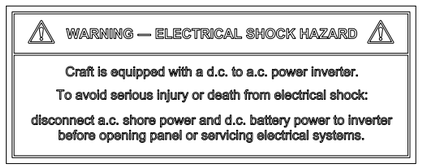

1 x
35106_NAVIX_ISO_INVERTER_CHARGER_WARNING_LABEL_V1

BUSBAR LABEL MOUNTING

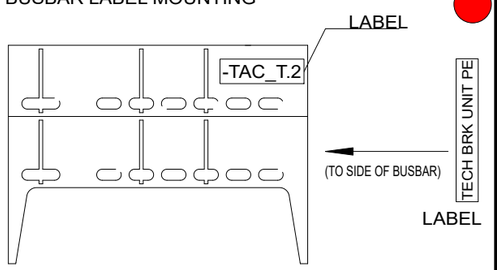

36862_AXOPAR_45_STNDRD_TECH_AC_BRK_UNIT_EU_LABEL_SET_V1

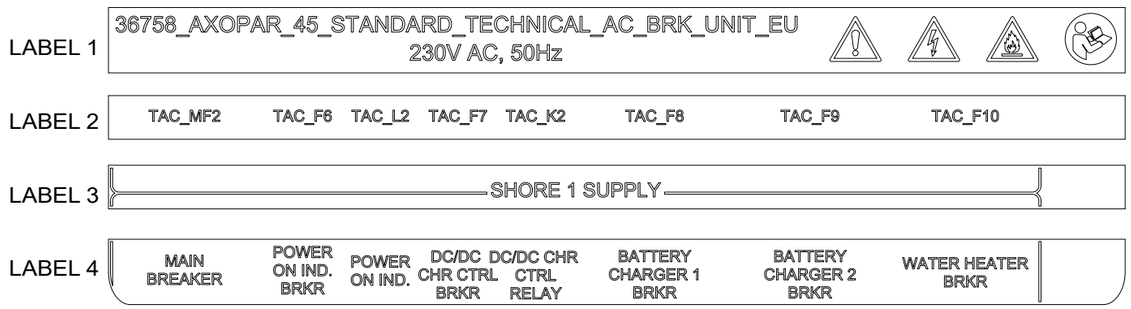

Date of modification	Modified by	Description
20.5.2022	TuM	A1: 2003713; INTRODUCED DRAWING.
05.09.2023	TuM/AR	B2: 2004274; ADDED SH_X.76, SH_X77, SH_X78, SH_X79
9.11.2023	PF/TuM	C3: 2004890; Added end clamps, 2005065: busbar end pieces added

Date	20.5.2022
Drawing by	TuM
Sheet rev.	3
Project rev.	C

Copyright by

Axopar	36862	36758	
Boat	Sub-product code	Product code	Project ID
45	STANDARD TECHNICAL AC BRK UNIT - EU	HL	252 / 444
Boat model	Title	Loc	Sheet

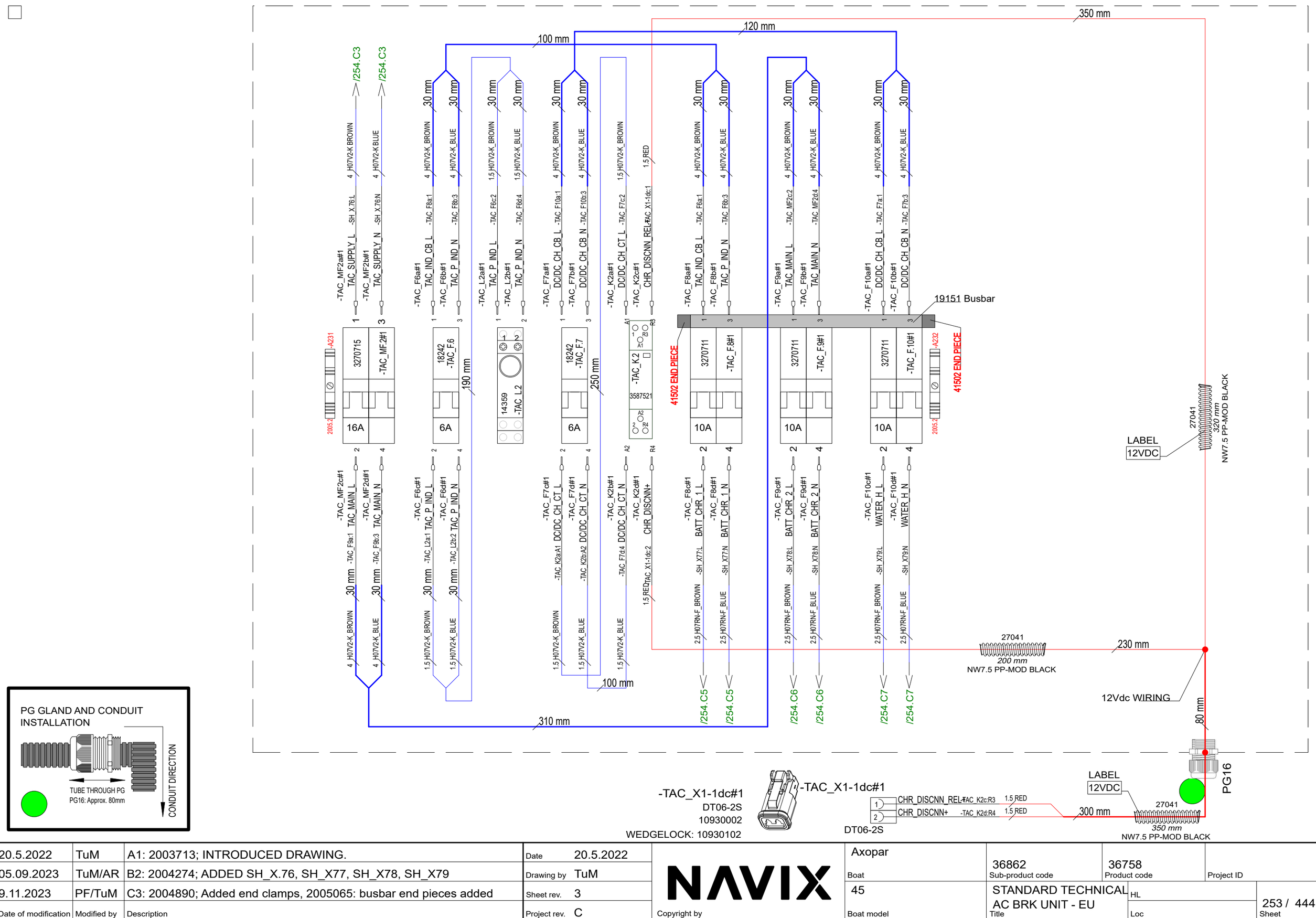

20.5.2022	TuM	A1: 2003713; INTRODUCED DRAWING.	Date	20.5.2022	NAVIX	Axopar	36862	36758	
05.09.2023	TuM/AR	B2: 2004274; ADDED SH_X.76, SH_X77, SH_X78, SH_X79	Drawing by	TuM		Boat	Sub-product code	Product code	Project ID
9.11.2023	PF/TuM	C3: 2004890; Added end clamps, 2005065: busbar end pieces added	Sheet rev.	3		45	STANDARD TECHNICAL AC BRK UNIT - EU	HL	253 / 444
Date of modification	Modified by	Description	Project rev.	C	Copyright by	Boat model	Title	Loc	Sheet

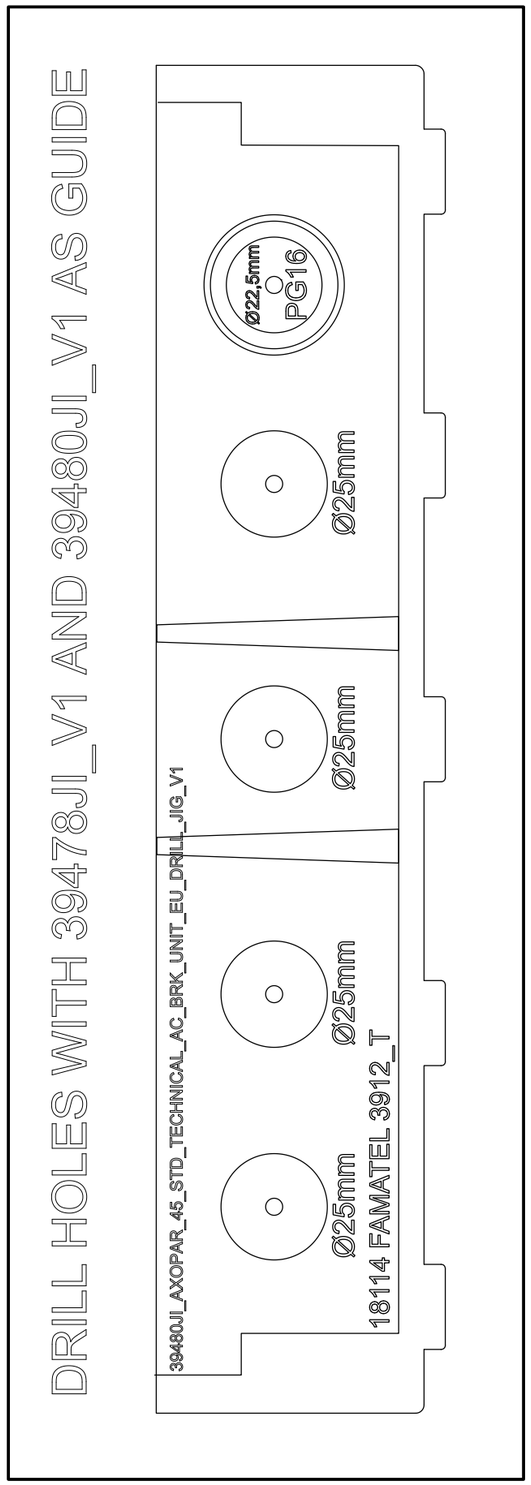

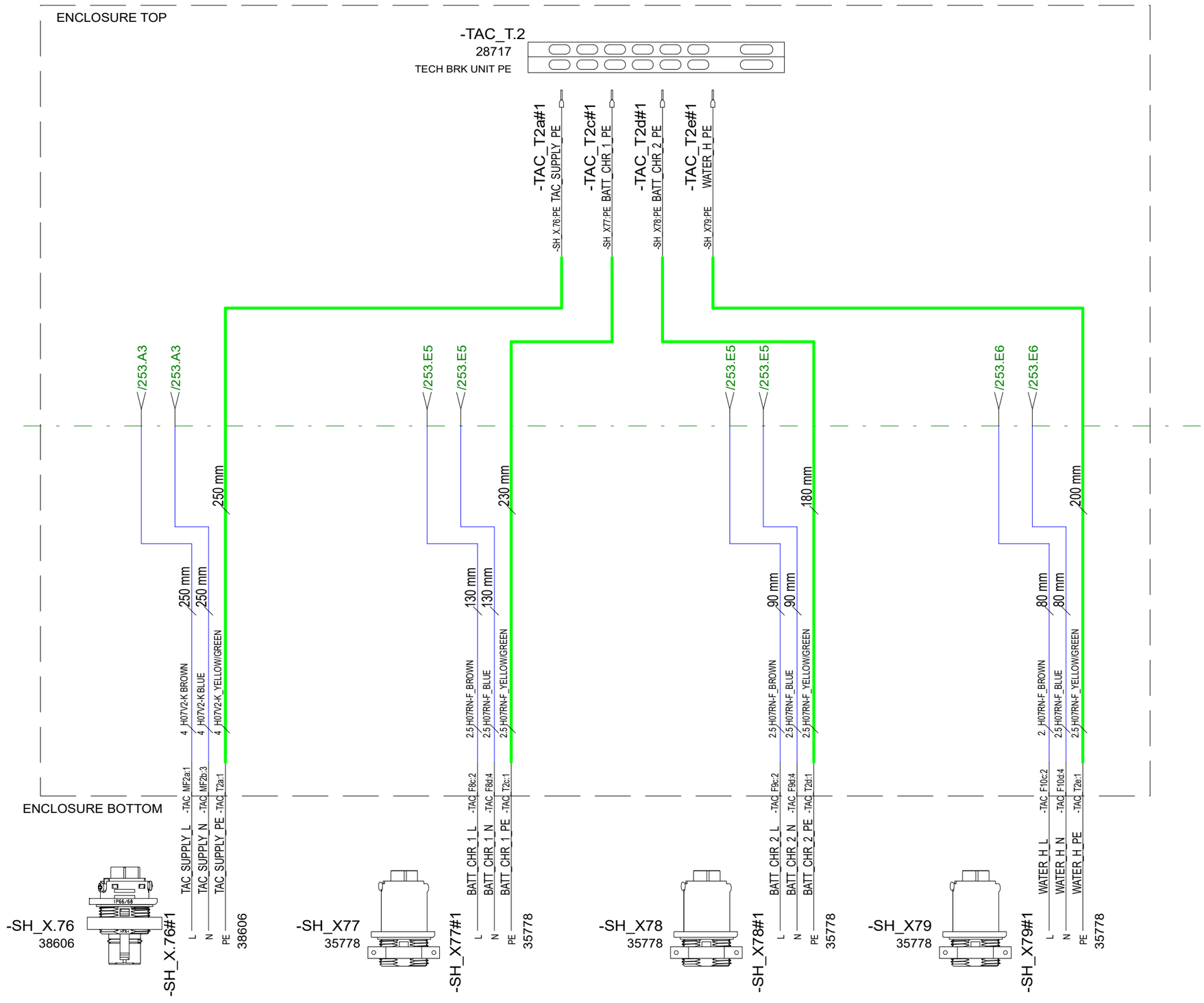

20.5.2022	TuM	A1: 2003713; INTRODUCED DRAWING.	Date	20.5.2022	NAVIX	Axopar	36862	36758	
05.09.2023	TuM/AR	B2: 2004274; ADDED SH_X.76, SH_X77, SH_X78, SH_X79	Drawing by	TuM		Boat	Sub-product code	Product code	Project ID
9.11.2023	PF/TuM	C3: 2004890; Added end clamps, 2005065: busbar end pieces added	Sheet rev.	3		45	STANDARD TECHNICAL AC BRK UNIT - EU	HL	254 / 444
Date of modification	Modified by	Description	Project rev.	C	Copyright by	Boat model	Title	Loc	Sheet

SPC TARKASTUSPÖYTÄKIRJA
SPC INSPECTION SHEET

TUOTE TARRA /
PRODUCT LABEL

* PPKKVV-JÄRJESTYSNUMERO / DDMMYY-RUNNING NUMBER (Esim. 11. maaliskuuta 2013 tehty tuote on sarjanumeroltaan 110313-01, seuraava on 110313-02 jne.)

SARJANUMERO* / SERIAL NUMBER*						
JOHDOT KIINNI OIKEIN / CORRECT CONNECTIONS						
MAADOITUS TULEVAT JA LÄHTEVÄT / GROUND CONNECTION IN AND OUT						
VVS JA TOTSIT I-ASENNOSSA / RCBO AND CIRCUIT BREAKERS IN I-POSITION						
ERISTYSVASTUS (mA) max lukema ** / ISOLATION RESISTOR (mA) max **						
MAAPIIRI 10A (Ohm) max lukema ** / GROUND CIRCUIT 10A (Ohm) max **						
TOIMINNALLINEN JA VVS TESTAUS / FUNCTIONAL AND RCBO TEST						
SARJANUMERO TARRA / SERIAL NUMBER STICKER						
PVM / DATE						
TESTASI / TESTED BY						

Tehty CENELEC EN 50106 mukaan / Made according to CENELEC EN 50106

**ERISTYSVASTUS JA MAAPIIRI TESTATTAVA JOKAISEEN SISÄÄNTULOON JA ULOSMENOON / ISOLATION RESISTOR AND GROUND CIRCUIT SHOULD BE TESTED FOR EVERY IN AND OUT

RAJA-ARVOT / LIMITS:

ERISTYSVASTUS / ISOLATING RESISTOR 1000V = <20mA

MAAPIIRI / GROUND CIRCUIT 10A = <0,2 Ohm

Date of modification	Modified by	Description
20.5.2022	TuM	A1: 2003713; INTRODUCED DRAWING.
05.09.2023	TuM/AR	B2: 2004274; ADDED SH_X.76, SH_X77, SH_X78, SH_X79
9.11.2023	PF/TuM	C3: 2004890; Added end clamps, 2005065: busbar end pieces added

Date	20.5.2022
Drawing by	TuM
Sheet rev.	3
Project rev.	C

Copyright by NAVIX

Axopar	36862	36758	
Boat	Sub-product code	Product code	Project ID
45	STANDARD TECHNICAL AC BRK UNIT - EU	HL	255 / 444
Boat model	Title	Loc	Sheet

GENERAL LAYOUT/ LABEL INSTALLATION

36760 Axopar 45 STANDARD INV/CHR AC MAIN BRK UNIT - EU

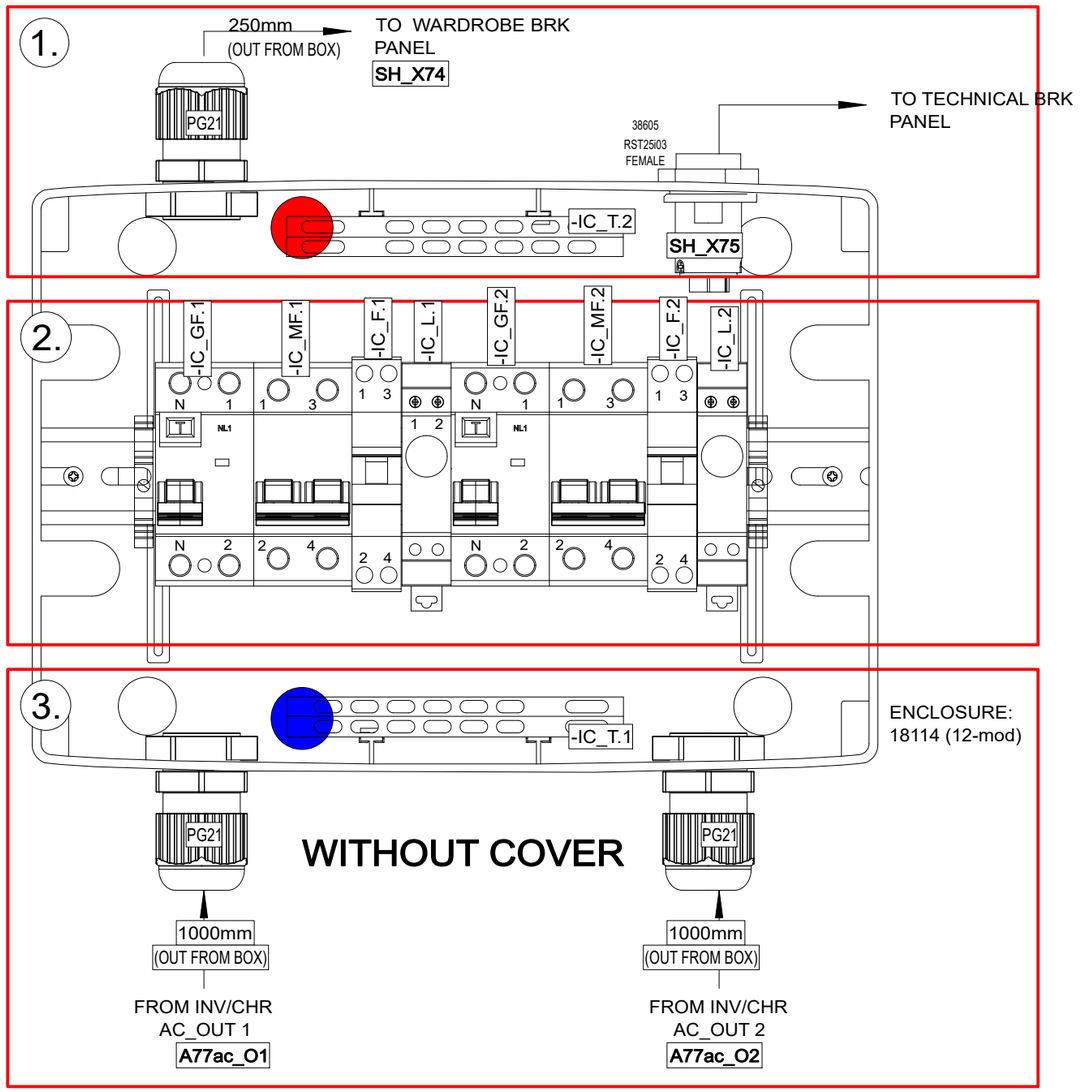

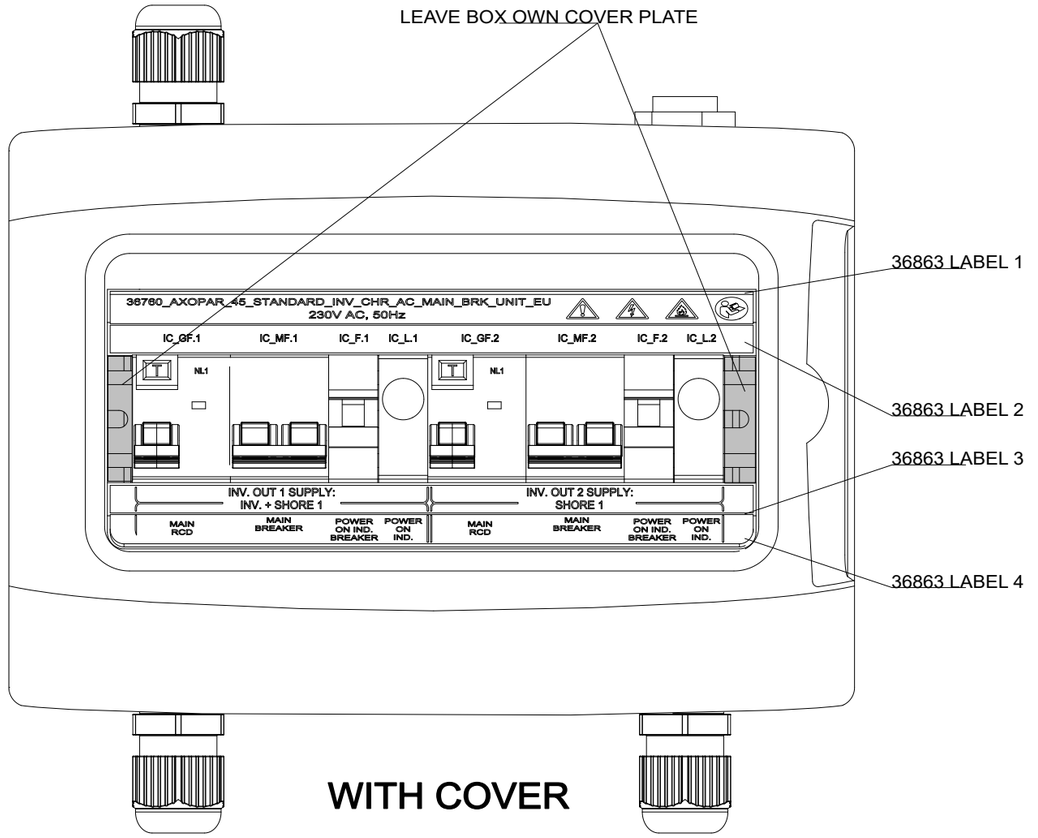

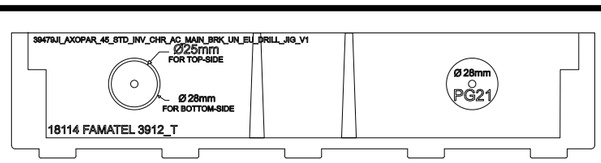

DRILL HOLES TO 18114 WITH 39478JI_V1 AND 39479JI_V1 AS GUIDE

INCLUDED TO DELIVERY

1 x

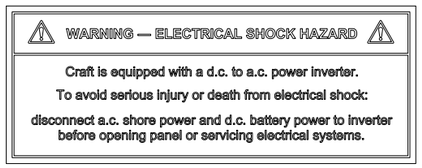

35106_NAVIX_ISO_INVERTER_CHARGER_WARNING_LABEL_V1

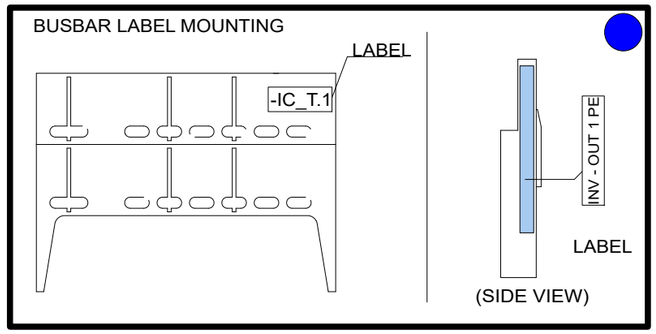

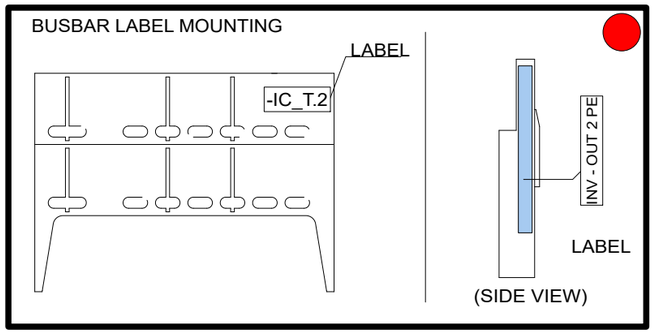

Date of modification	Modified by	Description
9.6.2022	TuM	A1: 2003713; INTRODUCED DRAWING.
19.9.2023	TuM	B2: 2004274; CONNECTORS ADDED, RCBO SPLITTED TO RCD and CB
9.11.2023	PF	C3: 2004890; Added end clamps

Date	9.6.2022
Drawing by	TuM
Sheet rev.	3
Project rev.	C

Copyright by NAVIX

Boat	Sub-product code	Product code	Project ID
Axopar	36863	36760	

Boat model	Title	Loc	Sheet
45	STANDARD INV/CHR AC MAIN BRK UNIT - EU	HL	256 / 444

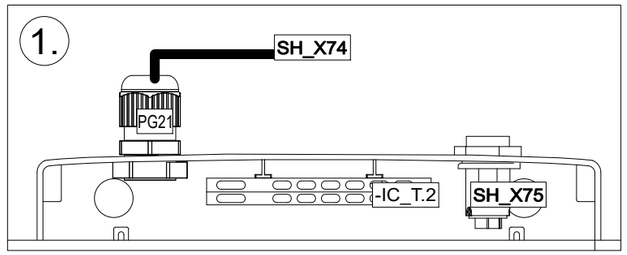

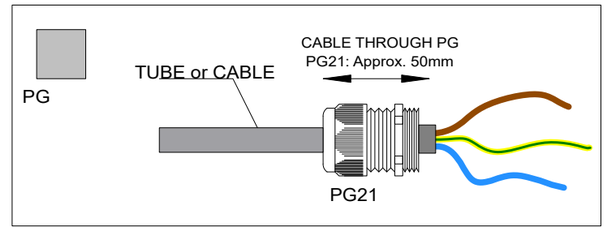

-SH_X74#1

3G6,39189 H07RN-F BLACK

6 H07RN-F BROWN — -IC_MF1c:2 INV_O1_OUT_L — L

6 H07RN-F BLUE — -IC_MF1d:4 INV_O1_OUT_N — N

6 H07RN-F YELLOW/GREEN — -IC_T1b:1 INV_O1_OUT_PE — PE

38206

-SH_X74

38206

250 mm

PG

50 mm

6 H07RN-F YELLOW/GREEN

/258.A2

/258.A2

-IC_T.2

28717

INV - OUT 2 PE

-IC_T2a#1

I/C_OUT2_PE

4 H07RN-F YELLOW/GREEN

-A77ac O2:PE

100 mm

-IC_T2b#1

TAC_SUPPLY_PE

4 H07V2-K GREEN-YELLOW

-SH_X75:PE

250 mm

-SH_X75#1

L TAC SUPPLY L

N TAC SUPPLY_N

PE TAC_SUPPLY_PE

-IC_MF2c:2

-IC_MF2d:4

-IC_T2b:1

4 H07V2-K BROWN

4 H07V2-K BLUE

4 H07V2-K GREEN-YELLOW

38605

-SH_X75

38605

/258.A6

/258.A7

			Date	22.9.2023	NAVIX	Axopar		36760	
			Drawing by	TuM		Boat	Sub-product code	Product code	Project ID
9.11.2023	PF	C3: 2004890; Added end clamps	Sheet rev.	3		45	STANDARD INV/CHR	HL	257 / 444
Date of modification	Modified by	Description	Project rev.	C	Copyright by	Boat model	AC MAIN BRK UNIT - EU	Loc	Sheet
							Title		

2.

/257.F2
/257.F2
/257.F6
/257.F6
/259.A2
/259.A2
/259.A6
/259.A7

6 H07RN-F YELLOW/GREEN
200 mm
200 mm
4 H07RN-F YELLOW/GREEN
200 mm
300 mm

-IC_ GF1b#1 I/C_OUT1_N 6 H07RN-F BLUE 30 mm -A7ac_O1:N
-IC_ GF1a#1 I/C_OUT1_L 6 H07RN-F BROWN 30 mm -A7ac_O1:L
-A233
2005.2
N 1 63A 14366 N 2 -IC_GF.1
200 mm
N2 2
-IC_GF1d#1 -IC_O1_JMP_N
-IC_GF1c#1 -IC_O1_JMP_L
-IC_MF1b:3 6 H07V2-K BLUE 30 mm
-IC_MF1a:1 6 H07V2-K BROWN 30 mm

-IC_MF1a#1 I/C_O1_JMP_L 6 H07V2-K BROWN 30 mm -IC_GF1c:2
-IC_MF1b#1 I/C_O1_JMP_N 6 H07V2-K BLUE 30 mm -IC_GF1d:N2
1 3270717 25A 2 4 -IC_MF.1#
250 mm
2 4
-IC_MF1d#1 -IC_O1_OUT_N
-IC_MF1c#1 -IC_O1_OUT_L
-IC_F1a:1, -SH_X74:L 6 H07RN-F BROWN 30 mm
-SH_X74:N, -IC_F1b:3 6 H07V2-K BLUE 30 mm
6 H07V2-K BROWN 30 mm
6 H07V2-K BLUE 30 mm

-IC_F1a#1 INV_O1_OUT_L 6 H07V2-K BROWN 30 mm -IC_MF1c:2
-IC_F1b#1 INV_O1_OUT_N 6 H07V2-K BLUE 30 mm -IC_MF1d:4
1 18242 3 -IC_F.1 6A 2 4
200 mm
2 4
-IC_F1d#1 -IC_O1_PO_IND_N
-IC_F1c#1 -IC_O1_PO_IND_L
-IC_L1b:2 1.5 H07V2-K BLUE 30 mm
-IC_L1a:1 1.5 H07V2-K BROWN 30 mm

-IC_L1a#1 INV1_O1_PO_IND_L -IC_F1c:2 1.5 H07V2-K BROWN 30 mm
-IC_L1b#1 INV1_O1_PO_IND_N -IC_F1d:4 1.5 H07V2-K BLUE 30 mm
1 14359 2 -IC_L.1
300 mm
2 4
-IC_L1d#1 -IC_O1_PO_IND_N
-IC_L1c#1 -IC_O1_PO_IND_L
-IC_L1b:2 1.5 H07V2-K BLUE 30 mm
-IC_L1a:1 1.5 H07V2-K BROWN 30 mm

-IC_GF2b#1 I/C_OUT2_N 4 H07RN-F BLUE 30 mm -A7ac_O2:N
-IC_GF2a#1 I/C_OUT2_L 4 H07RN-F BROWN 30 mm -A7ac_O2:L
N 1 63A 14366 N 2 -IC_GF.2
200 mm
N2 2
-IC_GF2d#1 -IC_O2_JMP_N
-IC_GF2c#1 -IC_O2_JMP_L
-IC_MF2b:3 4 H07V2-K BLUE 30 mm
-IC_MF2a:1 4 H07V2-K BROWN 30 mm

-IC_MF2a#1 I/C_O2_JMP_L 4 H07V2-K BROWN 30 mm -IC_GF2c:2
-IC_MF2b#1 I/C_O2_JMP_N 4 H07V2-K BLUE 30 mm -IC_GF2d:N2
1 3270715 16A 2 4 -IC_MF.2#
200 mm
2 4
-IC_MF2d#1 -IC_O2_JMP_N
-IC_MF2c#1 -IC_O2_JMP_L
-IC_F2a:1, -SH_X75:L TAC_SUPPLY_L 4 H07V2-K BROWN 30 mm
-SH_X75:N, -IC_F2b:3 TAC_SUPPLY_N 4 H07V2-K BLUE 30 mm
4 H07V2-K BROWN 30 mm
4 H07V2-K BLUE 30 mm

-IC_F2a#1 TAC_SUPPLY_L -IC_MF2c:2 4 H07V2-K BROWN 30 mm
-IC_F2b#1 TAC_SUPPLY_N -IC_MF2d:4 4 H07V2-K BLUE 30 mm
1 18242 3 -IC_F.2 6A 2 4
200 mm
2 4
-IC_F2d#1 -IC_O2_PO_IND_N
-IC_F2c#1 -IC_O2_PO_IND_L
-IC_L2b:2 INV_O2_PO_IND_N 1.5 H07V2-K BLUE 30 mm
-IC_L2a:1 INV_O2_PO_IND_L 1.5 H07V2-K BROWN 30 mm

-IC_L2a#1 INV_O2_PO_IND_L -IC_F2c:2 1.5 H07V2-K BROWN 30 mm
-IC_L2b#1 INV_O2_PO_IND_N -IC_F2d:4 1.5 H07V2-K BLUE 30 mm
1 14359 2 -IC_L.2
-A234
2005.2
300 mm
2 4
-IC_L2d#1 -IC_O2_PO_IND_N
-IC_L2c#1 -IC_O2_PO_IND_L
-IC_L2b:2 1.5 H07V2-K BLUE 30 mm
-IC_L2a:1 1.5 H07V2-K BROWN 30 mm

9.6.2022	TuM	A1: 2003713; INTRODUCED DRAWING.	Date	9.6.2022	NAVIX	Axopar	36863	36760	
19.9.2023	TuM	B2: 2004274; CONNECTORS ADDED, RCBO SPLITTED TO RCD and CB	Drawing by	TuM		Boat	Sub-product code	Product code	Project ID
9.11.2023	PF	C3: 2004890; Added end clamps	Sheet rev.	3		45	STANDARD INV/CHR	HL	258 / 444
Date of modification	Modified by	Description	Project rev.	C	Copyright by	Boat model	Title	Loc	Sheet
							AC MAIN BRK UNIT - EU		

3.

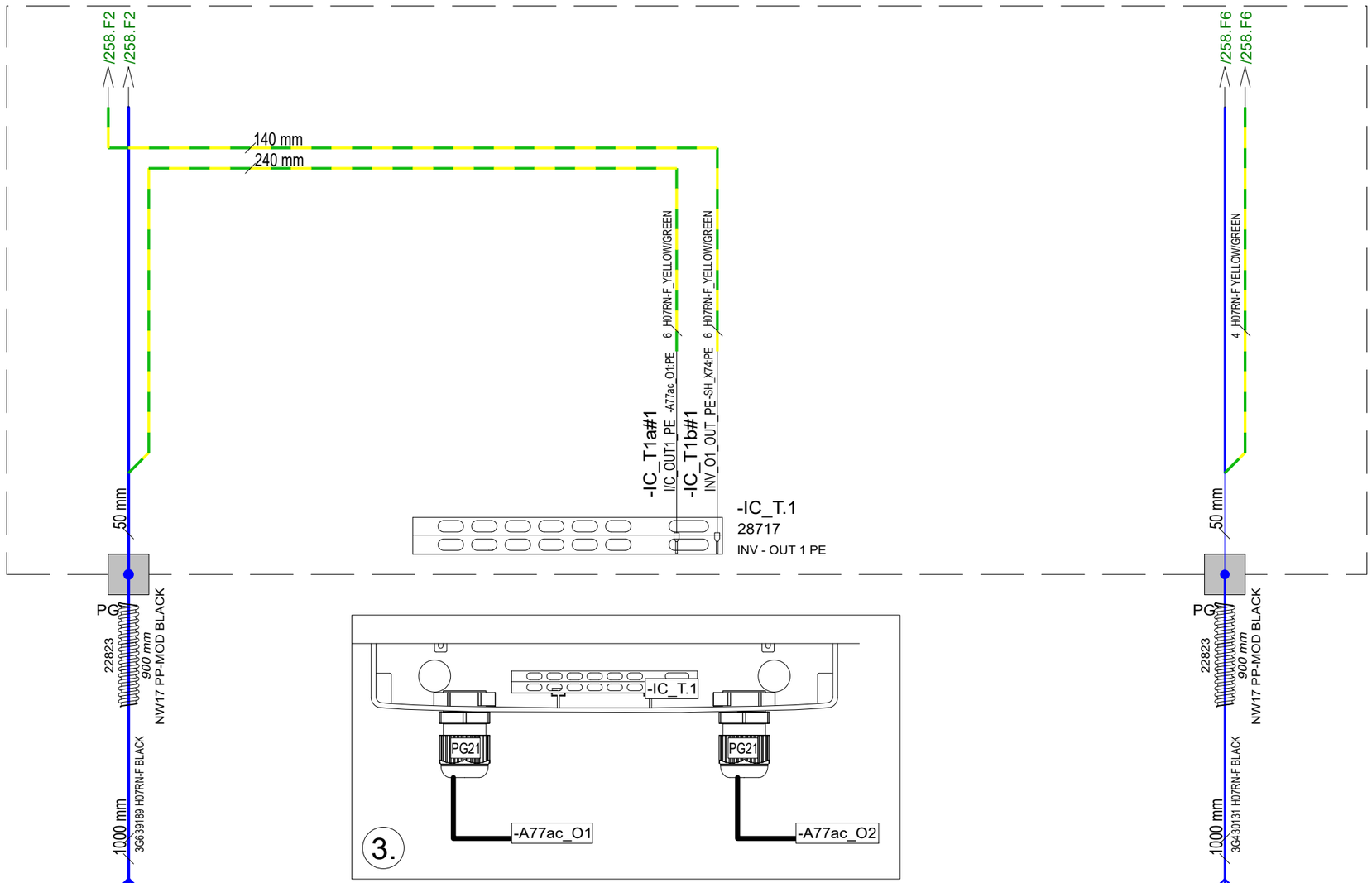

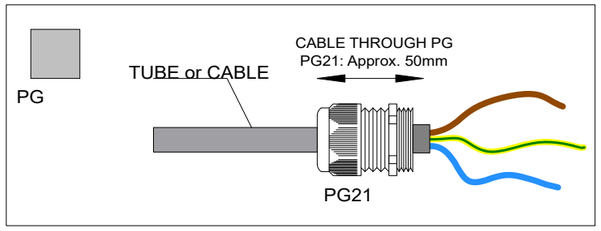

Date of modification	Modified by	Description							
9.6.2022	TuM	A1: 2003713; INTRODUCED DRAWING.	Date	9.6.2022	NAVIX	Axopar	36863	36760	
19.9.2023	TuM	B2: 2004274; CONNECTORS ADDED, RCBO SPLITTED TO RCD and CB	Drawing by	TuM		Boat	Sub-product code	Product code	Project ID
9.11.2023	PF	C3: 2004890; Added end clamps	Sheet rev.	3		45	STANDARD INV/CHR	HL	
			Project rev.	C	Copyright by	Boat model	AC MAIN BRK UNIT - EU	Loc	259 / 444
							Title		Sheet

SPC TARKASTUSPÖYTÄKIRJA
SPC INSPECTION SHEET

TUOTE TARRA /
PRODUCT LABEL

* PPKKVV-JÄRJESTYSNUMERO / DDMMYY-RUNNING NUMBER (Esim. 11. maaliskuuta 2013 tehty tuote on sarjanumeroltaan 110313-01, seuraava on 110313-02 jne.)

SARJANUMERO* / SERIAL NUMBER*						
JOHDOT KIINNI OIKEIN / CORRECT CONNECTIONS						
MAADOITUS TULEVAT JA LÄHTEVÄT / GROUND CONNECTION IN AND OUT						
VVS JA TOTSIT I-ASENNOSSA / RCBO AND CIRCUIT BREAKERS IN I-POSITION						
ERISTYSVASTUS (mA) max lukema ** / ISOLATION RESISTOR (mA) max **						
MAAPIIRI 10A (Ohm) max lukema ** / GROUND CIRCUIT 10A (Ohm) max **						
TOIMINNALLINEN JA VVS TESTAUS / FUNCTIONAL AND RCBO TEST						
SARJANUMERO TARRA / SERIAL NUMBER STICKER						
PVM / DATE						
TESTASI / TESTED BY						

Tehty CENELEC EN 50106 mukaan / Made according to CENELEC EN 50106

**ERISTYSVASTUS JA MAAPIIRI TESTATTAVA JOKAISEEN SISÄÄNTULOON JA ULOSMENOON / ISOLATION RESISTOR AND GROUND CIRCUIT SHOULD BE TESTED FOR EVERY IN AND OUT

RAJA-ARVOT / LIMITS:

ERISTYSVASTUS / ISOLATING RESISTOR 1000V = <20mA

MAAPIIRI / GROUND CIRCUIT 10A = <0,2 Ohm

Date of modification	Modified by	Description
9.6.2022	TuM	A1: 2003713; INTRODUCED DRAWING.
19.9.2023	TuM	B2: 2004274; CONNECTORS ADDED, RCBO SPLITTED TO RCD and CB
9.11.2023	PF	C3: 2004890; Added end clamps

Date	9.6.2022
Drawing by	TuM
Sheet rev.	3
Project rev.	C

Copyright by NAVIX

Axopar Boat	36863 Sub-product code	36760 Product code	Project ID
45 Boat model	STANDARD INV/CHR AC MAIN BRK UNIT - EU Title	HL Loc	260 / 444 Sheet

37067 Axopar 45 DECK HARNESS

NOTICE!
VERIFY THAT ALL CABLES HAVE MARKINGS
SHOWN IN EXAMPLE BELOW.

EXEMPTION:
ALL <500mm WIRES AND BLACK WIRES
THIS MARKING IS NOT NEEDED.



EXAMPLE: RED 1,5mm2 WIRE MARKINGS.

NOTICE!
THIS PAGE SHOWS ONLY GENERAL LAYOUT OF HARNESS.
MORE DETAILED DRAWINGS ARE SEEN IN FOLLOWED PAGES.

NUMBER INSIDE CIRCLE, FOR IN AREA SHOWS PAGE WHERE ACTUAL DRAWING INCLUDES.

FOR EXAMPLE:

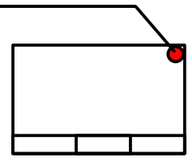

LABEL
-A-
= ORIENTATION POINT

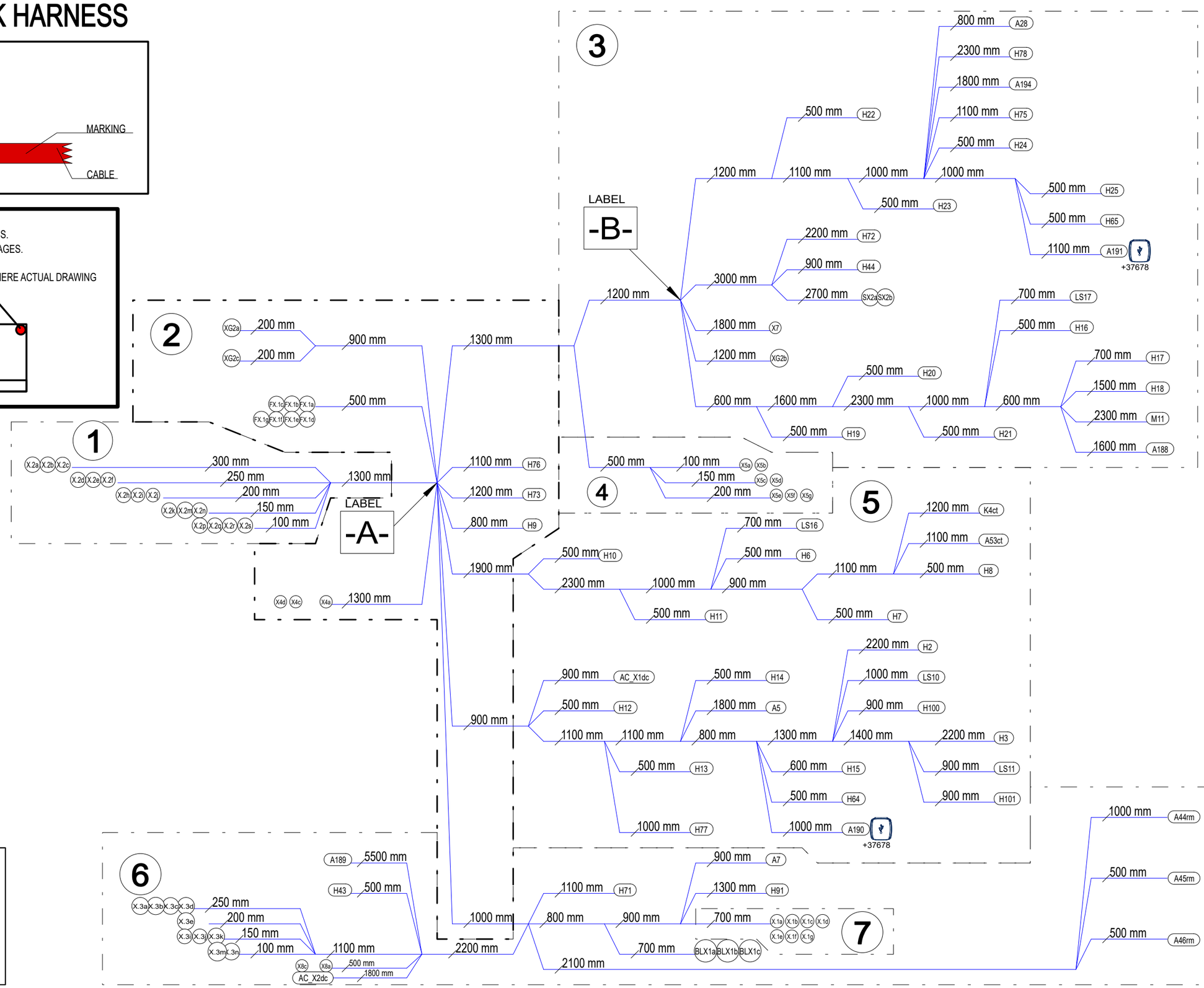

22.5.2023	PF	B1: 2004274; INTRODUCED DRAWING.	Date	22.5.2023	NAVIX	Axopar		37067	
8.11.2023	PF	C2: 2004890; AC_X2dc & X8 moved, X4d & X2s added, spkr cables rem; 2005043 Tubes added.	Drawing by	TuM		Boat	Sub-product code	Product code	Project ID
			Sheet rev.	2		45	DECK HARNESS	HL	261/ 444
Date of modification	Modified by	Description	Project rev.	C	Copyright by	Boat model	Title	Loc	Sheet

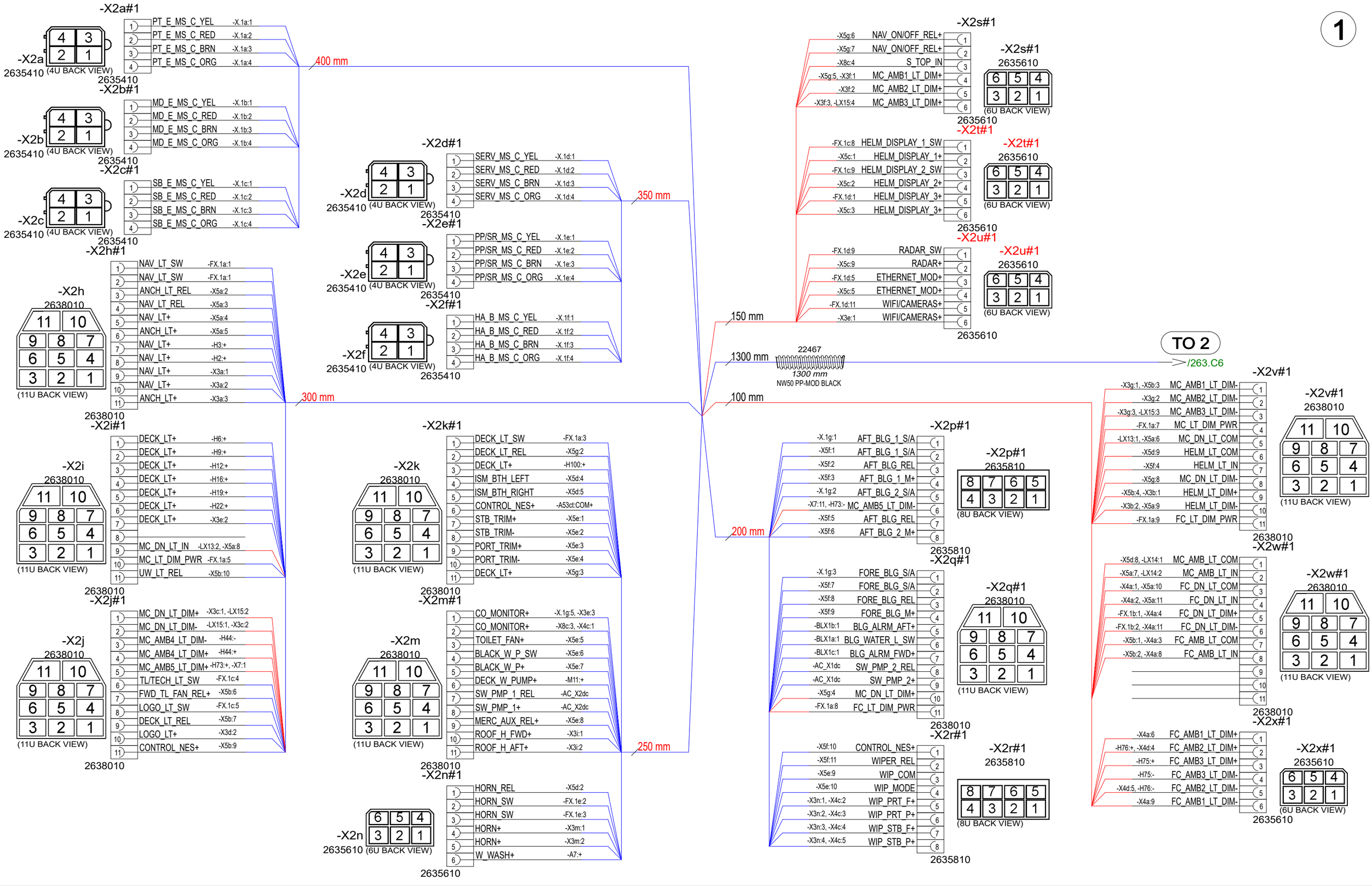

22.5.2023	PF	B1: 2004274; INTRODUCED DRAWING.	Date	22.5.2023	NAVIX	Axopar	
8.11.2023	PF/TuM	C2: 2004890; AC_X2dc & X8 moved, X4d & X2s added, spkr cables rem; 2005043 Tubes added.	Drawing by	PF		Boat	Sub-product code: 37067 Product code; Project ID
			Sheet rev.	2		45 Boat model	DECK HARNESS Title; HL Loc; 262 / 444 Sheet
Date of modification	Modified by	Description	Project rev.	C	Copyright by		

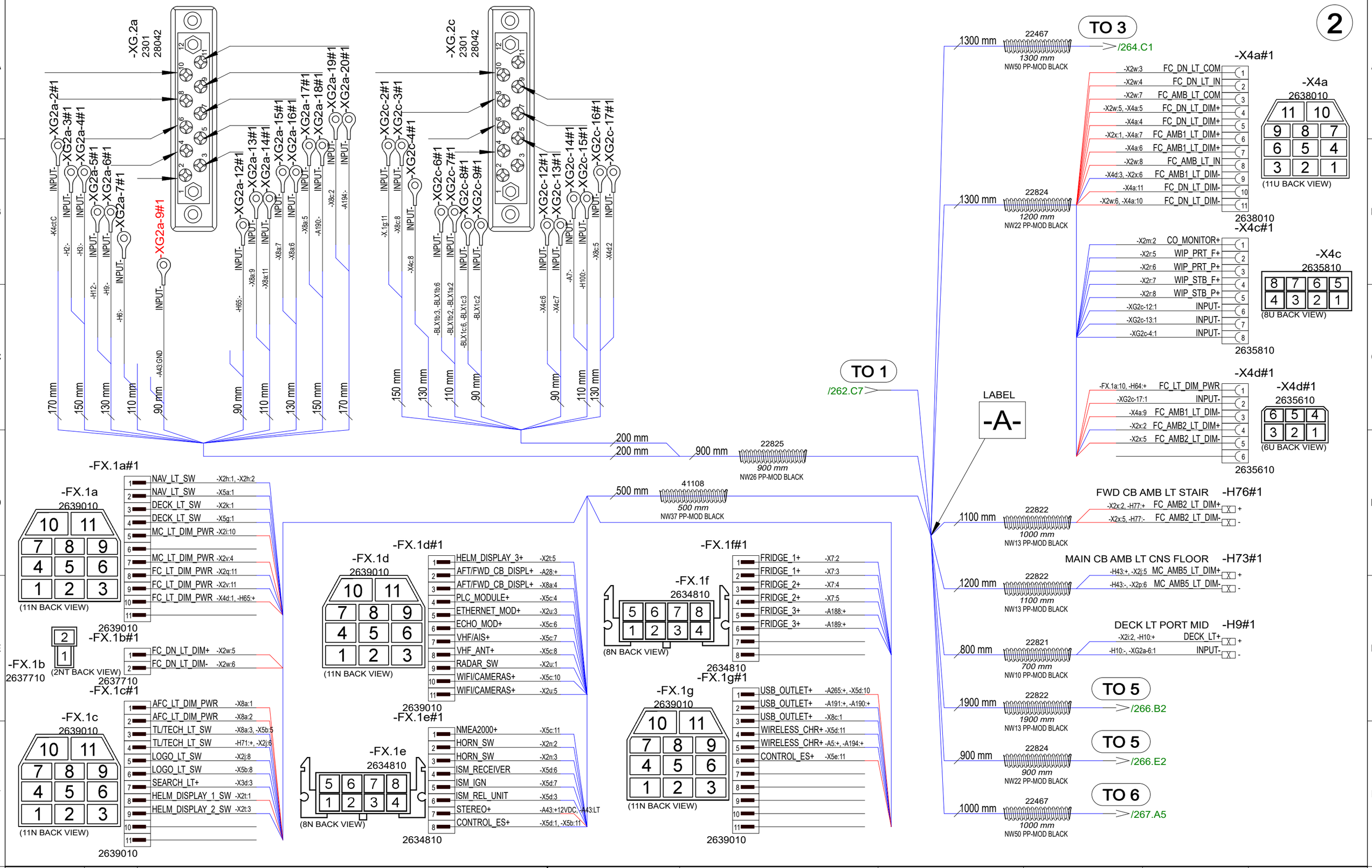

22.5.2023	PF	B1: 2004274; INTRODUCED DRAWING.	Date	22.5.2023	NAVIX	Axopar	
8.11.2023	PF/TuM	C2: 2004890; AC_X2dc & X8 moved, X4d & X2s added, spkr cables rem; 2005043 Tubes added.	Drawing by	PF		Boat	Sub-product code / Product code: 37067 / Project ID
			Sheet rev.	2		45	DECK HARNESS
Date of modification	Modified by	Description	Project rev.	C	Copyright by	Boat model	Title / HL / Loc / Sheet: 263 / 444

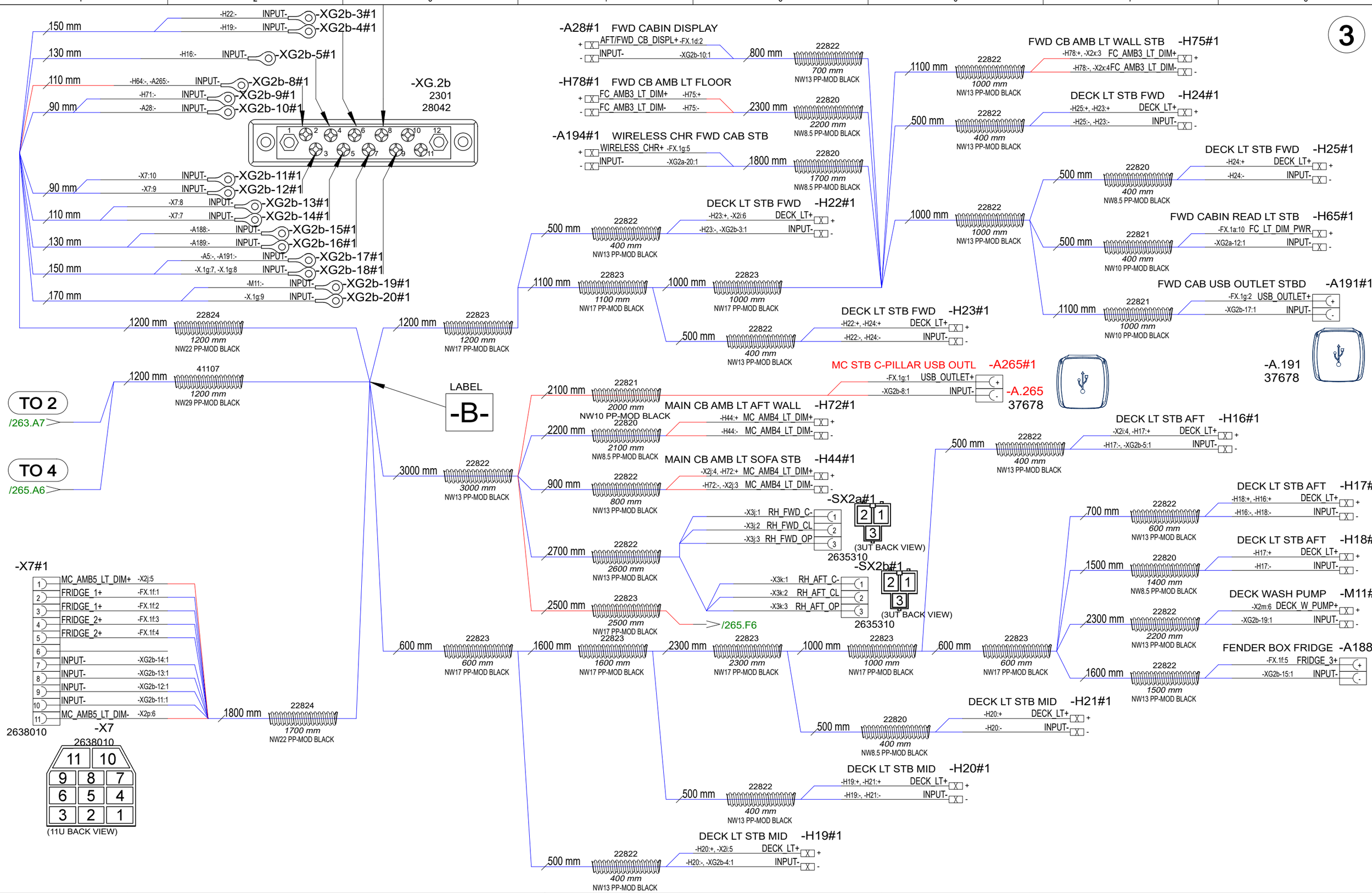

22.5.2023	PF	B1: 2004274; INTRODUCED DRAWING.	Date 22.5.2023	NAVIX	Axopar		37067
8.11.2023	PF/TuM	C2: 2004890; AC_X2dc & X8 moved, X4d & X2s added, spkr cables rem; 2005043 Tubes added.	Drawing by PF		Boat	Sub-product code	Product code / Project ID
			Sheet rev. 2		45	DECK HARNESS	HL
Date of modification	Modified by	Description	Project rev. C	Copyright by	Boat model	Title	Loc / 264 / 444 Sheet

TO 3
/264.D1

500 mm
41108
500 mm
NW37 PP-MOD BLACK

-X5a#1
2638010
(11U BACK VIEW)

1	NAV_LT_SW	-FX.1a:2
2	ANCH_LT_REL	-X2h:3
3	NAV_LT_REL	-X2h:4
4	NAV_LT+	-X2h:5
5	ANCH_LT+	-X2h:6
6	MC_DN_LT_COM	-X2v:5
7	MC_AMB_LT_IN	-X2w:2
8	MC_DN_LT_IN	-X2i:9
9	HELM_LT_DIM-	-X2v:10
10	FC_DN_LT_COM	-X2w:3
11	FC_DN_LT_IN	-X2w:4

2638010

100 mm

-X5b#1
2638010
(11U BACK VIEW)

1	FC_AMB_LT_COM	-X2w:7
2	FC_AMB_LT_IN	-X2w:8
3	MC_AMB1_LT_DIM-	-X2v:1
4	HELM_LT_DIM+	-X2v:9
5	TL/TECH_LT_SW	-FX.1c:3
6	FWD_TL_FAN_REL+	-X2j:7
7	DECK_LT_REL	-X2j:9
8	LOGO_LT_SW	-FX.1c:6
9	CONTROL_NES+	-X2j:11
10	UW_LT_REL	-X2i:11
11	CONTROL_ES+	-FX.1e:8

2638010

-X5c#1
2638010
(11U BACK VIEW)

1	HELM_DISPLAY_1+	-X2t:2
2	HELM_DISPLAY_2+	-X2t:4
3	HELM_DISPLAY_3+	-X2t:6
4	PLC_MODULE+	-FX.1d:4
5	ETHERNET_MOD+	-X2u:4
6	ECHO_MOD+	-FX.1d:6
7	VHF/AIS+	-FX.1d:7
8	VHF_ANT+	-FX.1d:8
9	RADAR+	-X2u:2
10	WIFI/CAMERAS+	-FX.1d:10
11	NMEA2000+	-FX.1e:1

2638010

150 mm

-X5d#1
2638010
(11U BACK VIEW)

1	CONTROL_ES+	-FX.1e:8
2	HORN_REL	-X2n:1
3	ISM_REL_UNIT	-FX.1e:6
4	ISM_BTH_LEFT	-X2k:4
5	ISM_BTH_RIGHT	-X2k:5
6	ISM_RECEIVER	-FX.1e:4
7	ISM_IGN	-FX.1e:5
8	MC_AMB_LT_COM	-X2w:1
9	HELM_LT_COM	-X2v:6
10	USB_OUTLET+	-FX.1g:1
11	WIRELESS_CHR+	-FX.1g:4

2638010

200 mm

-X5e#1

-X2k:7	STB_TRIM+	1
-X2k:8	STB_TRIM-	2
-X2k:9	PORT_TRIM+	3
-X2k:10	PORT_TRIM-	4
-X2m:3	TOILET_FAN+	5
-X2m:4	BLACK_W_P_SW	6
-X2m:5	BLACK_W_P+	7
-X2m:9	MERC_AUX_REL+	8
-X2r:3	WIP_COM	9
-X2r:4	WIP_MODE	10
-FX.1g:6	CONTROL_ES+	11

2638010

-X5e#1
2638010
(11U BACK VIEW)

-X5f#1

-X2p:2	AFT_BLG_1_S/A	1
-X2p:3	AFT_BLG_REL	2
-X2p:4	AFT_BLG_1_M+	3
-X2v:7	HELM_LT_IN	4
-X2p:7	AFT_BLG_REL	5
-X2p:8	AFT_BLG_2_M+	6
-X2q:2	FORE_BLG_S/A	7
-X2q:3	FORE_BLG_REL	8
-X2q:4	FORE_BLG_M+	9
-X2r:1	CONTROL_NES+	10
-X2r:2	WIPER_REL	11

2638010

-X5f#1
2638010
(11U BACK VIEW)

-X5g#1

-FX.1a:4	DECK_LT_SW	1
-X2k:2	DECK_LT_REL	2
-X2k:11	DECK_LT+	3
-X2q:10	MC_DN_LT_DIM+	4
-X2s:4	MC_AMB1_LT_DIM+	5
-X2s:1	NAV_ON/OFF_REL+	6
-X2s:2	NAV_ON/OFF_REL+	7
-X2v:8	MC_DN_LT_DIM-	8

2635810

-X5g#1
2635810
(8U BACK VIEW)

-LX13
2637810
(2UT BACK VIEW)

-LX13#1

1	MC_DN_LT_COM	-X2v:5
2	MC_DN_LT_IN	-X2i:9

2637810

200 mm

-LX14
2637810
(2UT BACK VIEW)

-LX14#1

1	MC_AMB_LT_COM	-X2w:1
2	MC_AMB_LT_IN	-X2w:2

2637810

200 mm

-LX15
2635410
(4U BACK VIEW)

-LX15#1

1	MC_DN_LT_DIM-	-X2j:2
2	MC_DN_LT_DIM+	-X2j:1
3	MC_AMB3_LT_DIM-	-X2v:3
4	MC_AMB3_LT_DIM+	-X2s:6

2635410

200 mm

/264.E4

Date of modification	Modified by	Description
22.5.2023	PF	B1: 2004274; INTRODUCED DRAWING.
8.11.2023	PF/TuM	C2: 2004890; AC_X2dc & X8 moved, X4d & X2s added, spkr cables rem; 2005043 Tubes added.

Date	10.3.2024
Drawing by	TuM
Sheet rev.	2
Project rev.	C

NAVIX
Copyright by

Axopar		37067		
Boat	Sub-product code	Product code	Project ID	
45	DECK HARNESS		HL	265 / 444
Boat model	Title		Loc	Sheet

TO 2
/263.E7

2300 mm 22822 2300 mm NW13 PP-MOD BLACK
1000 mm 22822 1000 mm NW13 PP-MOD BLACK
900 mm 22822 900 mm NW13 PP-MOD BLACK
1100 mm 22822 1100 mm NW13 PP-MOD BLACK
500 mm 22822 400 mm NW13 PP-MOD BLACK
DECK LT PORT AFT -H6#1
-X2i:1, -H7:+ DECK_LT+ +
-H7:-, -XG2a-7:1 INPUT- -
1200 mm 22821 1100 mm NW10 PP-MOD BLACK
AFT WINCH C-TOR: CTRL -K4ct#1
-A53ct:A3 AFT_WINCH_A3 A3
-XG2a-2:1 INPUT- C
-A53ct:A2 AFT_WINCH_A2 A2
1100 mm 22821 1000 mm NW10 PP-MOD BLACK
AFT WINCH SWP -A53ct#1
-K4ct:A3 AFT_WINCH_A3 A3
-X2k:6 CONTROL_NES+ COM+
-K4ct:A2 AFT_WINCH_A2 A2
500 mm 22820 400 mm NW8.5 PP-MOD BLACK
DECK LT PORT AFT -H8#1
-H7:+ DECK_LT+ +
-H7:- INPUT- -
500 mm 22822 400 mm NW13 PP-MOD BLACK
DECK LT PORT AFT -H7#1
-H8:+, -H6:+ DECK_LT+ +
-H8:-, -H6:- INPUT- -
500 mm 22820 400 mm NW8.5 PP-MOD BLACK
DECK LT PORT MID -H11#1
-H10:+ DECK_LT+ +
-H10:- INPUT- -
500 mm 22822 400 mm NW13 PP-MOD BLACK
DECK LT PORT MID -H10#1
-H11:+, -H9:+ DECK_LT+ +
-H11:-, -H9:- INPUT- -

TO 2
/263.F7

1100 mm 22823 1100 mm NW17 PP-MOD BLACK
1100 mm 22823 1100 mm NW17 PP-MOD BLACK
800 mm 22823 800 mm NW17 PP-MOD BLACK
1300 mm 22822 1300 mm NW13 PP-MOD BLACK
1000 mm 22820 900 mm NW8.5 PP-MOD BLACK
FWD CB AMB LT WALL PRT -H77#1
-H76:+ FC_AMB2_LT_DIM+ +
-H76:- FC_AMB2_LT_DIM- -
500 mm 22822 400 mm NW13 PP-MOD BLACK
DECK LT PORT FWD -H13#1
-H14:+, -H12:+ DECK_LT+ +
-H14:-, -H12:- INPUT- -
1000 mm 22821 900 mm NW10 PP-MOD BLACK
FWD CAB USB OUTLET PORT -A190#1
-FX.1g:2 USB_OUTLET+ +
-XG2a-18:1 INPUT- -
-A.190 37678
500 mm 22820 400 mm NW8.5 PP-MOD BLACK
DECK LT PORT FWD -H15#1
-H14:+ DECK_LT+ +
-H14:- INPUT- -
500 mm 22821 400 mm NW10 PP-MOD BLACK
FWD CABIN READ LT PRT -H64#1
-X4d:1 FC_LT_DIM_PWR +
-XG2b-8:1 INPUT- -
1800 mm 22820 1700 mm NW8.5 PP-MOD BLACK
WIRELESS CHR FWD CAB PRT -A5#1
-FX.1g:5 WIRELESS_CHR+ +
-XG2b-17:1 INPUT- -
500 mm 22822 400 mm NW13 PP-MOD BLACK
DECK LT PORT FWD -H14#1
-H15:+, -H13:+ DECK_LT+ +
-H15:-, -H13:- INPUT- -
800 mm 22822 800 mm NW13 PP-MOD BLACK
DECK LT BOW PORT -H100#1
-H101:+, -X2k:3 DECK_LT+ +
-XG2c-15:1, -H101:- INPUT- -
1400 mm 22822 1400 mm NW13 PP-MOD BLACK
2200 mm 22820 2100 mm NW8.5 PP-MOD BLACK
SIDE LT STB -H3#1
-X2h:7 NAV_LT+ +
-XG2a-4:1 INPUT- -
900 mm 22820 800 mm NW8.5 PP-MOD BLACK
DECK LT BOW STB -H101#1
-H100:+ DECK_LT+ +
-H100:- INPUT- -
2200 mm 22820 2100 mm NW8.5 PP-MOD BLACK
SIDE LT PORT -H2#1
-X2h:8 NAV_LT+ +
-XG2a-3:1 INPUT- -
900 mm 22822 800 mm NW13 PP-MOD BLACK
A/C SEA W P RELAY BOX: DC -AC_X1dc#1
-X2q:8 SW_PMP_2_REL
-X2q:9 SW_PMP_2+
500 mm 22822 400 mm NW13 PP-MOD BLACK
DECK LT PORT FWD -H12#1
-X2i:3, -H13:+ DECK_LT+ +
-H13:-, -XG2a-5:1 INPUT- -

22.5.2023	PF	B1: 2004274; INTRODUCED DRAWING.	Date 22.5.2023	NAVIX	Axopar		37067
8.11.2023	PF/TuM	C2: 2004890; AC_X2dc & X8 moved, X4d & X2s added, spkr cables rem; 2005043 Tubes added.	Drawing by PF		Boat	Sub-product code	Product code / Project ID
			Sheet rev. 2		45	DECK HARNESS	HL
Date of modification	Modified by	Description	Project rev. C	Copyright by	Boat model	Title	Loc / 266 / 444 Sheet

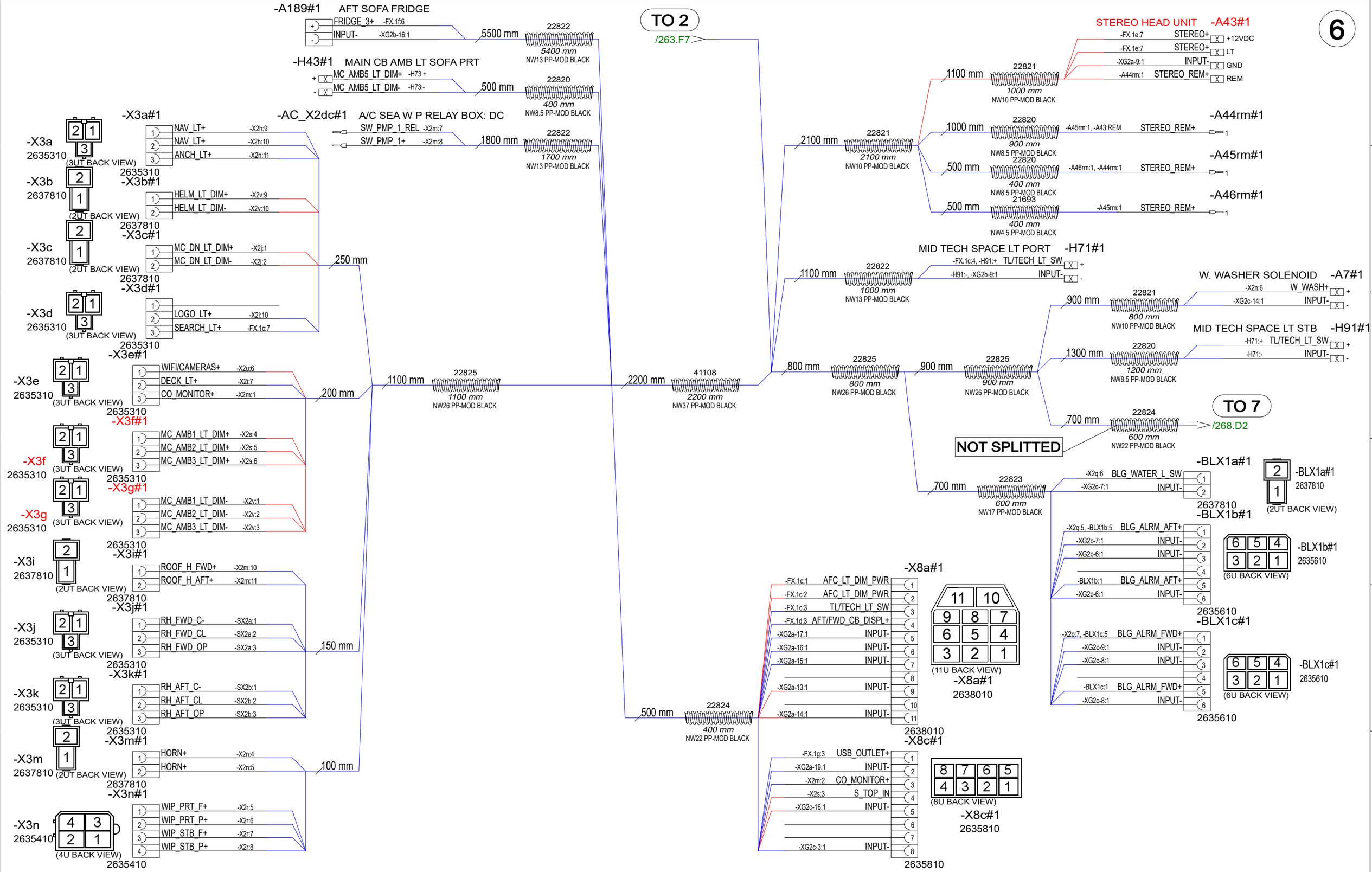

22.5.2023	PF	B1: 2004274; INTRODUCED DRAWING.	Date	22.5.2023	NAVIX	Axopar		37067
8.11.2023	PF/TuM	C2: 2004890; AC_X2dc & X8 moved, X4d & X2s added, spkr cables rem; 2005043 Tubes added.	Drawing by	PF		Boat	Sub-product code	Product code
			Sheet rev.	2		45	DECK HARNESS	HL
Date of modification	Modified by	Description	Project rev.	C	Copyright by	Boat model	Title	Loc

Project ID

267 / 444
Sheet

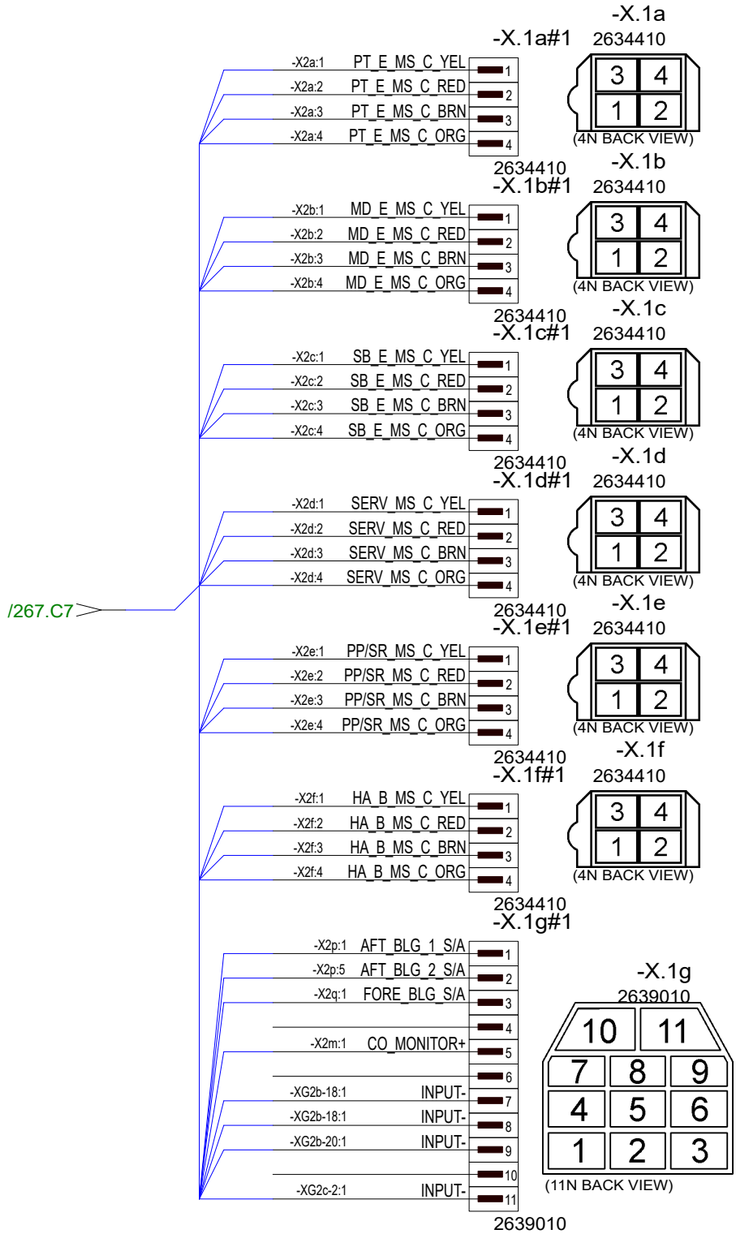

22.5.2023	PF	B1: 2004274; INTRODUCED DRAWING.	Date	11.3.2024	NAVIX	Axopar		37067	
8.11.2023	PF/TuM	C2: 2004890; AC_X2dc & X8 moved, X4d & X2s added, spkr cables rem; 2005043 Tubes added.	Drawing by	TuM		Boat	Sub-product code	Product code	Project ID
			Sheet rev.	2		45	DECK HARNESS	HL	268 / 444
Date of modification	Modified by	Description	Project rev.	C	Copyright by	Boat model	Title	Loc	Sheet

37068 Axopar 45 CONSOLE HARNESS

NOTICE!
VERIFY THAT ALL CABLES HAVE MARKINGS
SHOWN IN EXAMPLE BELOW.

EXEMPTION:
ALL <500mm WIRES AND BLACK WIRES
THIS MARKING IS NOT NEEDED.

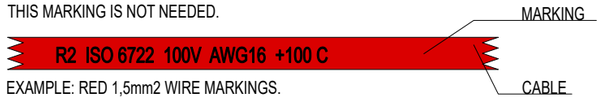

EXAMPLE: RED 1,5mm2 WIRE MARKINGS.

INCLUDE:

-BERKER SWITCH ELEMENT
- ANTHRACITE FRAME

L_S5 — 250 mm — LX.3

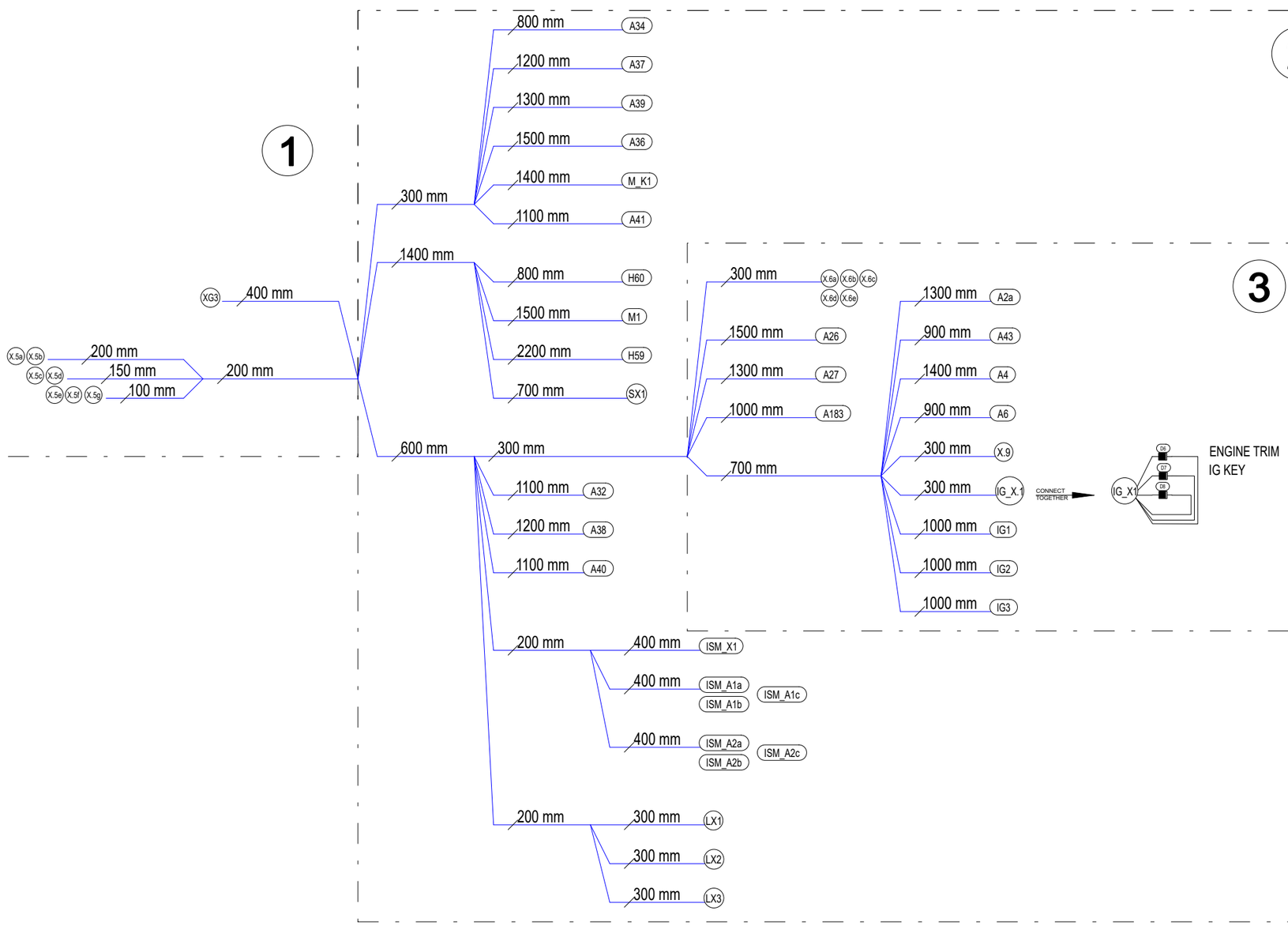

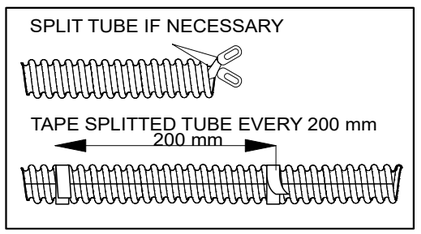

Date of modification	Modified by	Description
26.5.2023	PF	B1: 2004274; INTRODUCED DRAWING.
8.11.2023	PF/TuM	C2:2004890; NOT MODIFIED, 2005043; TUBES ADDED

Date	26.5.2023
Drawing by	TuM
Sheet rev.	2
Project rev.	C

NAVIX
Copyright by

Axopar		37068	
Boat	Sub-product code	Product code	Project ID
45	CONSOLE HARNESS	HL	269 / 444
Boat model	Title	Loc	Sheet

INCLUDE:

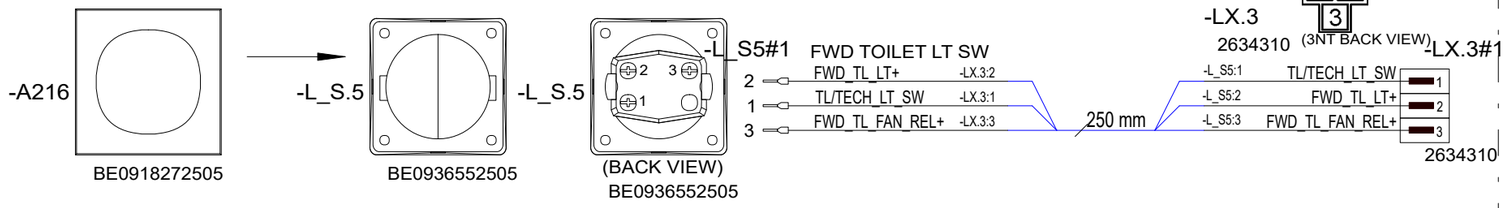

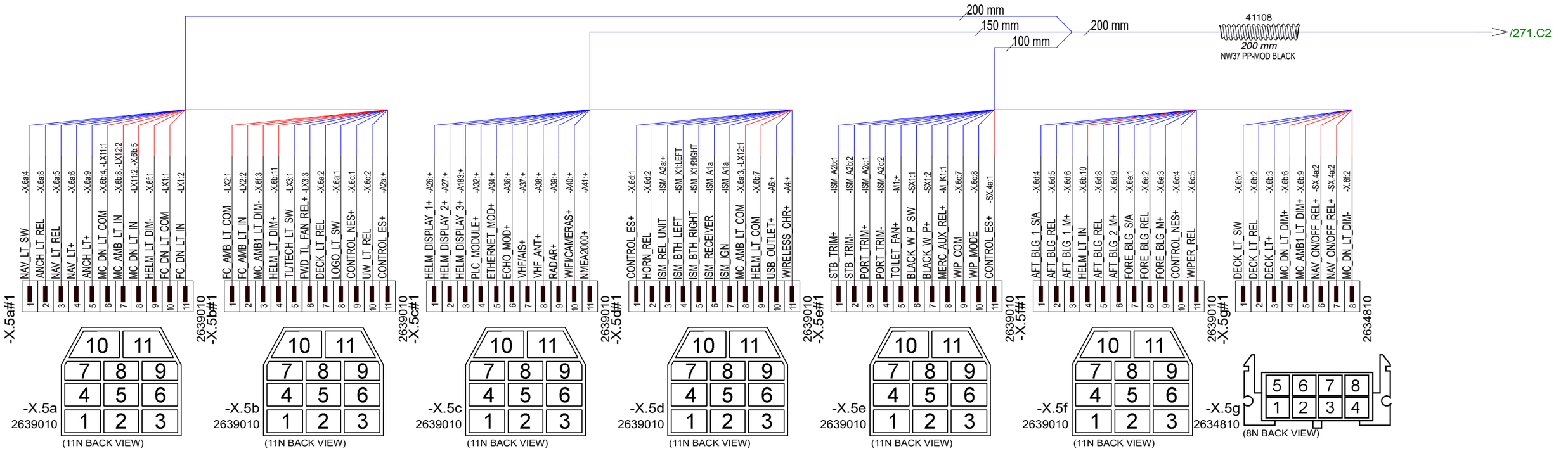

26.5.2023	PF	B1: 2004274; INTRODUCED DRAWING.	Date	26.5.2023	NAVIX	Axopar		37068
8.11.2023	PF/TuM	C2:2004890; NOT MODIFIED, 2005043; TUBES ADDED	Drawing by	TuM		Boat	Sub-product code	Product code / Project ID
			Sheet rev.	2		45	CONSOLE HARNESS	HL
Date of modification	Modified by	Description	Project rev.	C	Copyright by	Boat model	Title	Loc / 270 / 444 Sheet

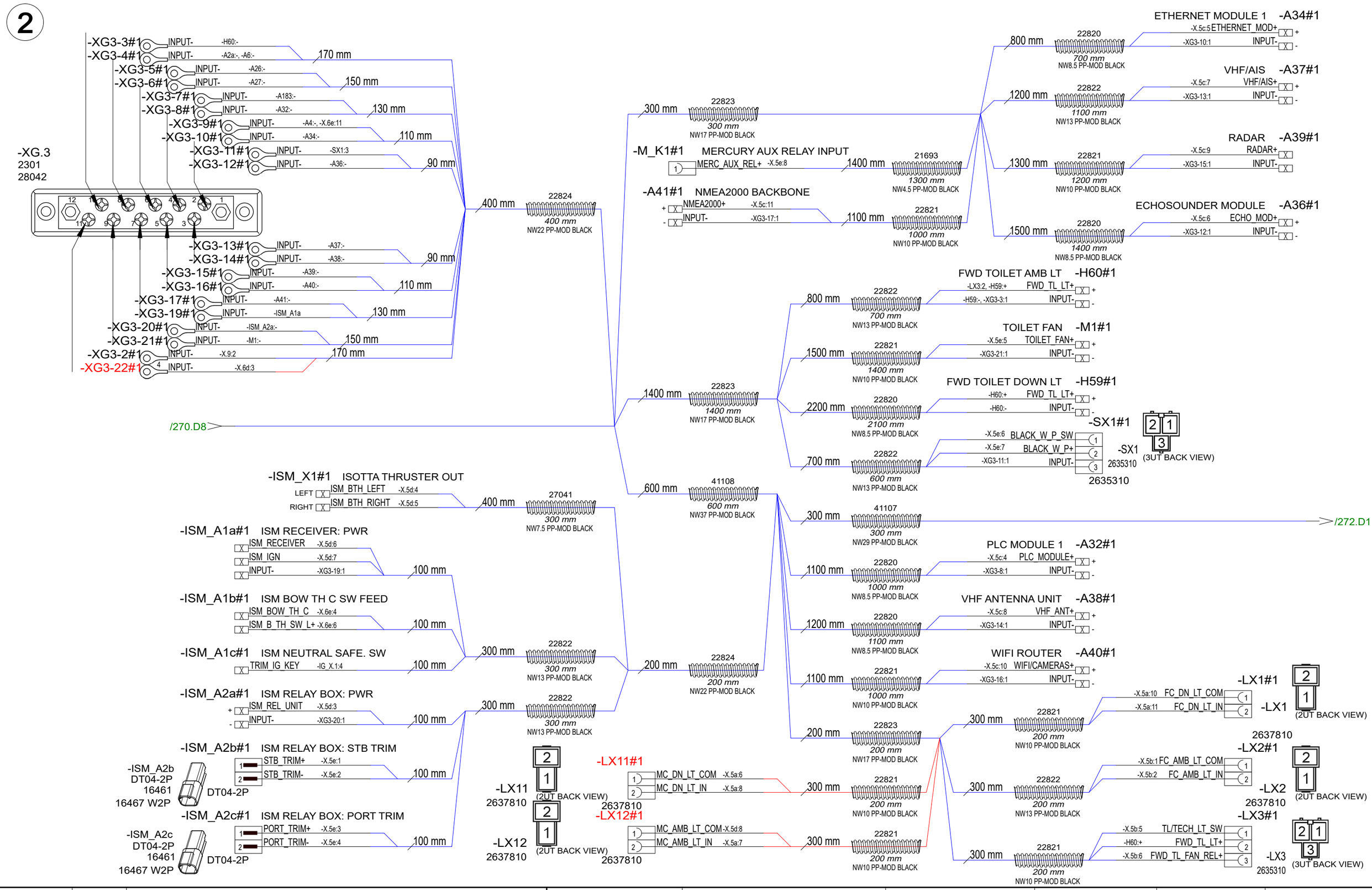

26.5.2023	PF	B1: 2004274; INTRODUCED DRAWING.	Date	26.5.2023	NAVIX	Axopar		37068
8.11.2023	PF/TuM	C2:2004890; NOT MODIFIED, 2005043; TUBES ADDED	Drawing by	TuM		Boat	Sub-product code	Product code / Project ID
			Sheet rev.	2		45	CONSOLE HARNESS	HL
Date of modification	Modified by	Description	Project rev.	C	Copyright by	Boat model	Title	Loc / 271/ 444 Sheet

3

/271.D8

USED ONLY WITH
LIGHT PACKAGE VERSION.

-X.6f#1
2634410 (4N BACK VIEW)

1	HELM_LT_DIM-	-X.5a:9
2	MC_DN_LT_DIM-	-X.5g:8
3	MC_AMB1_LT_DIM-	X.5b:3
4		

2634410

100 mm

-X.6a#1

-X.5b:8, -X.9:1	LOGO_LT_SW	1
-X.5b:7	DECK_LT_REL	2
-X.5d:8	MC_AMB_LT_COM	3
-X.5a:1	NAV_LT_SW	4
-X.5a:3	NAV_LT_REL	5
-X.5a:4	NAV_LT+	6
		7
-X.5a:2	ANCH_LT_REL	8
-X.5a:5	ANCH_LT+	9
		10
-SX.4b:1	SW_INPUT-	11

2639010

-X.6a#1
2639010 (11N BACK VIEW)

-X.6b#1

-X.5g:1	DECK_LT_SW	1
-X.5g:2	DECK_LT_REL	2
-X.5g:3	DECK_LT+	3
-X.5a:6	MC_DN_LT_COM	4
-X.5a:8	MC_DN_LT_IN	5
-X.5g:4	MC_DN_LT_DIM+	6
-X.5d:9	HELM_LT_COM	7
-X.5a:7	MC_AMB_LT_IN	8
-X.5g:5	MC_AMB1_LT_DIM+	9
-X.5f:4	HELM_LT_IN	10
-X.5b:4	HELM_LT_DIM+	11

2639010

-X.6b#1
2639010 (11N BACK VIEW)

-X.6c#1

-X.5b:9	CONTROL_NES+	1
-X.5b:10	UW_LT_REL	2
		3
-X.5f:10	CONTROL_NES+	4
-X.5f:11	WIPER_REL	5
		6
-X.5e:9	WIP_COM	7
-X.5e:10	WIP_MODE	8
		9
		10
		11

2639010

-X.6c#1
2639010 (11N BACK VIEW)

-X.6d#1

-X.5d:1	CONTROL_ES+	1
-X.5d:2	HORN_REL	2
-XG3-22:1	INPUT-	3
-X.5f:1	AFT_BLG_1_S/A	4
-X.5f:2	AFT_BLG_REL	5
-X.5f:3	AFT_BLG_1_M+	6
		7
-X.5f:5	AFT_BLG_REL	8
-X.5f:6	AFT_BLG_2_M+	9
		10
		11

2639010

-X.6d#1
2639010 (11N BACK VIEW)

-X.6e#1

-X.5f:7	FORE_BLG_S/A	1
-X.5f:8	FORE_BLG_REL	2
-X.5f:9	FORE_BLG_M+	3
-ISM_A1b	ISM_BOW_TH_C	4
		5
-ISM_A1b	ISM_B_TH_SW_L+	6
		7
		8
		9
-X.9:3	DIM_COM-	10
-XG3-9:1	INPUT-	11

2639010

-X.6e#1
2639010 (11N BACK VIEW)

200 mm — 22824 — 200 mm — NW22 PP-MOD BLACK

1500 mm — 22822 — 1400 mm — NW13 PP-MOD BLACK

HELM DISPLAY 1 -A26#1

-X.5c:1	HELM_DISPLAY_1+		+
-XG3-5:1	INPUT-		-

1300 mm — 22822 — 1200 mm — NW13 PP-MOD BLACK

HELM DISPLAY 2 -A27#1

-X.5c:2	HELM_DISPLAY_2+		+
-XG3-6:1	INPUT-		-

1000 mm — 22822 — 900 mm — NW13 PP-MOD BLACK

HELM DISPLAY 3 -A183#1

-X.5c:3	HELM_DISPLAY_3+		+
-XG3-7:1	INPUT-		-

700 mm — 22823 — 700 mm — NW17 PP-MOD BLACK

1300 mm — 22820 — 1200 mm — NW8.5 PP-MOD BLACK

SEARCH LT CTRL: PWR -A2a#1

-X.5b:11	CONTROL_ES+		+
-XG3-4:1	INPUT-		-

1400 mm — 22820 — 1300 mm — NW8.5 PP-MOD BLACK

WIRELESS CHR MAIN CABIN -A4#1

-X.5d:11	WIRELESS_CHR+		+
-XG3-9:1	INPUT-		-

900 mm — 22821 — 800 mm — NW10 PP-MOD BLACK

HELM USB OUTLET -A6#1

-X.5d:10	USB_OUTLET+		+
-XG3-4:1	INPUT-		-

300 mm — 22821 — 200 mm — NW10 PP-MOD BLACK

-X.9#1

-X.6a:1	LOGO_LT_SW	1
-XG3-2:1	INPUT-	2
-X.6e:10	DIM_COM-	3

-X.9
2634310 (3NT BACK VIEW)

2634310

-SX.4a#1

1	CONTROL_ES+	-X.5e:11
2	NAV_ON/OFF_REL+	-X.5g:6, -X.5g:7

-SX.4a#1
2634210 (2N BACK VIEW)
2634210

1000 mm — 22821 — 900 mm — NW10 PP-MOD BLACK

-SX.4b#1

1	SW_INPUT-	-X.6a:11

-SX.4b#1
2634110 (1N BACK VIEW)
2634110

300 mm — 22821 — 200 mm — NW10 PP-MOD BLACK

IGN DIODE SET -IG_X.1#1

-IG1:1	PRT_TRIM_IG_KEY	1
-IG2:1	MID_TRIM_IG_KEY	2
-IG3:1	STB_TRIM_IG_KEY	3
-ISM_A1c	TRIM_IG_KEY	4

-IG_X.1
2634410 (4N BACK VIEW)

2634410

1000 mm — 21693 — 900 mm — NW4.5 PP-MOD BLACK

PRT ENG TRIM IG KEY

-IG_X.1:1	PRT_TRIM_IG_KEY	1

-IG1#1

1000 mm — 21693 — 900 mm — NW4.5 PP-MOD BLACK

MID ENG TRIM IG KEY

-IG_X.1:2	MID_TRIM_IG_KEY	1

-IG2#1

1000 mm — 21693 — 900 mm — NW4.5 PP-MOD BLACK

STB ENG TRIM IG KEY

-IG_X.1:3	STB_TRIM_IG_KEY	1

-IG3#1

CONNECT TO IG_X.1

-IG_X1#1

-IG_X1
2635410 (4U BACK VIEW)
2635410

1	PRT_TRIM_IG_KEY	-D6:1	WITH SHRINK TUBE
2	MID_TRIM_IG_KEY	-D7:1	WITH SHRINK TUBE
3	STB_TRIM_IG_KEY	-D8:1	WITH SHRINK TUBE
4	TRIM_IG_KEY	-D6:2, -D8:2, -D7:2	

-D8#1 P600G 6A — -D7#1 P600G 6A — -D6#1 P600G 6A

26.5.2023	PF	B1: 2004274; INTRODUCED DRAWING.	Date	7.3.2024		Axopar		37068	
7.3.2024	PF/TuM	C2:2004890; NOT MODIFIED, 2005043; TUBES ADDED	Drawing by	TuM	NAVIX	Boat	Sub-product code	Product code	Project ID
			Sheet rev.	2		45	CONSOLE HARNESS	HL	272 / 444
Date of modification	Modified by	Description	Project rev.	C	Copyright by	Boat model	Title	Loc	Sheet

SPLIT TUBE IF NECESSARY

TAPE SPLITTED TUBE EVERY 200 mm

200 mm

NOTICE!
VERIFY THAT ALL CABLES HAVE MARKINGS
SHOWN IN EXAMPLE BELOW.

EXEMPTION:
ALL <500mm WIRES AND BLACK WIRES
THIS MARKING IS NOT NEEDED.

MARKING

R2 ISO 6722 100V AWG16 +100 C

CABLE

EXAMPLE: RED 1,5mm2 WIRE MARKINGS.

-X.3a#1 2634310 (3NT BACK VIEW)
1 NAV_LT+ -H4:+
2 NAV_LT+ -H5:+
3 ANCH_LT+ -H1:+

-X.3b#1 2637710 (2NT BACK VIEW)
1 HELM_LT_DIM+ -RH_X.1:1
2 HELM_LT_DIM- -RH_X.1:2

-X.3c#1 2637710 (2NT BACK VIEW)
1 MC_DN_LT_DIM+ -RH_X.3:1, -RH_X.2:1
2 MC_DN_LT_DIM- -RH_X.2:2, -RH_X.3:2

-X.3d#1 2634310 (3NT BACK VIEW)
2 LOGO_LT+ -A30:+, -A31:+
3 SEARCH_LT+ -H61:+

-X.3e#1 2634310 (3NT BACK VIEW)
1 WIFI/CAMERAS+ -A184:+, -A185:+
2 DECK_LT+ -H26:+
3 CO_MONITOR+ -A10:+

-X.3f#1
-X.3f 2634310 (3NT BACK VIEW)
1 MC_AMB1_LT_DIM+ -H40:+
2 MC_AMB2_LT_DIM+ -H41:+
3 MC_AMB3_LT_DIM+ -H42:+

-X.3g#1
-X.3g 2634310 (3NT BACK VIEW)
1 MC_AMB1_LT_DIM- -H40:-
2 MC_AMB2_LT_DIM- -H41:-
3 MC_AMB3_LT_DIM- -H42:-

100 mm
150 mm
200 mm
250 mm

-X.3i#1 -X.3i 2637710 (2NT BACK VIEW)
1 ROOF_H_FWD+ -A15a:+
2 ROOF_H_AFT+ -A17a:+

-X.3j#1 -X.3j 2634310 (3NT BACK VIEW)
1 RH_FWD_C- -A15b:BL
2 RH_FWD_CL -A15b:RD
3 RH_FWD_OP -A15b:BN

-X.3k#1 -X.3k 2634310 (3NT BACK VIEW)
1 RH_AFT_C- -A17b:BL
2 RH_AFT_CL -A17b:RD
3 RH_AFT_OP -A17b:BN

-X.3m#1 -X.3m 2637710 (2NT BACK VIEW)
1 HORN+ -HN_X1
2 HORN+ -HN_X1

-X.3n#1 -X.3n 2634410 (4N BACK VIEW)
1 WIP_PRT_F+ -M25
2 WIP_PRT_P+ -M25
3 WIP_STB_F+ -M26
4 WIP_STB_P+ -M26

700 mm 22825 700 mm NW26 PP-MOD BLACK
4000 mm 41107 4000 mm NW29 PP-MOD BLACK
22823 NW17 PP-MOD BLACK 700 mm

ROOF H. NEG. CONNECTION -XG5-1b#1
800 mm -XG4-1:1 INPUT- 8
50/8

1100 mm 41107 1100 mm NW29 PP-MOD BLACK
1000 mm 41107 1000 mm NW29 PP-MOD BLACK /274.D1

MAIN CB AMB LT ROOF -H40#1
900 mm 22822 800 mm NW13 PP-MOD BLACK
-X.3f:1 MC_AMB1_LT_DIM+ +
-X.3g:1 MC_AMB1_LT_DIM- -
BS

-RH_X.3#1
600 mm 22820 500 mm NW8.5 PP-MOD BLACK
-X.3c:1 MC_DN_LT_DIM+ 1
-X.3c:2 MC_DN_LT_DIM- 2
-RH_X.3#1 2637710 (2NT BACK VIEW)
2 Connected 2
1 (CONNECT TO RH_X3)

DECK LT ROOD PORT -H26#1
700 mm 22821 600 mm NW10 PP-MOD BLACK
-H27:+, -X.3e:2 DECK_LT+ +
-H27:-, -XG4-17:1 INPUT- -
BS

LOGO LT. PORT -A30#1
700 mm 22820 600 mm NW8.5 PP-MOD BLACK
-X.3d:2 LOGO_LT+ +
-XG4-8:1 INPUT- -

1700 mm 22824 1700 mm NW22 PP-MOD BLACK
2100 mm 22824 2100 mm NW22 PP-MOD BLACK /275.D1

-RH_X.2#1
800 mm 22820 700 mm NW8.5 PP-MOD BLACK
-X.3c:1 MC_DN_LT_DIM+ 1
-X.3c:2 MC_DN_LT_DIM- 2
-RH_X.2#1 2637710 (2NT BACK VIEW)
2 Connected 1
1 (CONNECT TO RH_X2)

MAIN CB AMB LT ROOF -H41#1
1900 mm 22821 1800 mm NW10 PP-MOD BLACK
-X.3f:2 MC_AMB2_LT_DIM+ +
-X.3g:2 MC_AMB2_LT_DIM- -
BS

ROOF H FWD: POWER -A15a#1
200 mm
-X.3i:1 ROOF_H_FWD+ +
-XG4-15:1 INPUT- -

4000 mm 22823 4000 mm NW17 PP-MOD BLACK

ROOF H FWD: CONTROLS -A15b#1
200 mm
-A16:BN, -X.3j:3 RH_FWD_OP BN
-A16:BL, -X.3j:1 RH_FWD_C- BL
200 mm
-A16:RD, -X.3j:2 RH_FWD_CL RD

Date of modification	Modified by	Description
9.5.2023	RK	B1: 2004274; INTRODUCED DRAWING
7.11.2023	PF/TuM	C2: 2004890; Added light harness (RH_X2 interf.), removed spkr cables; 2005043; Tubing added.

Date	8.5.2023
Drawing by	TuM
Sheet rev.	2
Project rev.	C

NAVIX
Copyright by

Axopar		37069	
Boat	Sub-product code	Product code	Project ID
45	MAIN CABIN ROOF HARNESS	HL	273 / 444
Boat model	Title	Loc	Sheet

-XG4-18#1 4 INPUT- -M25
-XG4-19#1 4 INPUT- -M26
150 mm

-XG4-17#1 4 INPUT- -H26:-
-XG4-16#1 INPUT- -A17a:-
130 mm

-XG4-15#1 4 INPUT- -A15a:-
-XG4-14#1 INPUT- -A10:-
110 mm

-XG4-13#1 4 INPUT- -HN_X2
-XG4-12#1 INPUT- -HN_X2
90 mm

LABEL:
-XG.4: RH. NEG. BUSBAR
(TO THE BASE OF BUSBAR BASE)

-XG.4-
2301
28042

-XG4-1#1 RH. NEG. BUSBAR
8 INPUT- -XG5-1b:1
50/6
30 mm

-XG4-2#1 4 INPUT- -H1:-
-XG4-3#1 4 INPUT- -H5:-
90 mm

-XG4-4#1 4 INPUT- -H4:-
110 mm

130 mm

-XG4-8#1 4 INPUT- -A30:-, -A31:-
-XG4-9#1 4 INPUT- -H61:-
150 mm

-XG4-10#1 4 INPUT- -A184:-
-XG4-11#1 4 INPUT- -A185:-
170 mm

800 mm 22825 800 mm NW26 PP-MOD BLACK

/273.B6

700 mm 22822 700 mm NW13 PP-MOD BLACK
1700 mm 22820 1600 mm NW8.5 PP-MOD BLACK
CO MONITOR, MAIN CABIN -A10#1
-X.3e:3 CO_MONITOR+ +
-XG4-14:1 INPUT- -
BS

2100 mm 22820 2000 mm NW8.5 PP-MOD BLACK
LOGO LT. STBD -A31#1
-X.3d:2 LOGO_LT+ +
-XG4-8:1 INPUT- -

500 mm 22820 400 mm NW8.5 PP-MOD BLACK
DECK LT ROOF STB -H27#1
-H26:+ DECK_LT+ +
-H26:- INPUT- -
BS

1000 mm 22823 1000 mm NW17 PP-MOD BLACK
500 mm 22822 400 mm NW13 PP-MOD BLACK
SEARCH LT -H61#1
-X.3d:3 SEARCH_LT+ +
-XG4-9:1 INPUT- -

800 mm 22820 700 mm NW8.5 PP-MOD BLACK
360 LIGHT -H1#1
-X.3a:3 ANCH_LT+ +
-XG4-2:1 INPUT- -
BS

700 mm 22820 600 mm NW8.5 PP-MOD BLACK
MAST HEAD LT -H5#1
-X.3a:2 NAV_LT+ +
-XG4-3:1 INPUT- -
BS

700 mm 22820 600 mm NW8.5 PP-MOD BLACK
STERN LT -H4#1
-X.3a:1 NAV_LT+ +
-XG4-4:1 INPUT- -
BS

1200 mm 22823 1200 mm NW17 PP-MOD BLACK
200 mm
ROOF H AFT: POWER -A17a#1
-X.3i:2 ROOF_H_AFT+ +
-XG4-16:1 INPUT- -
200 mm
ROOF H AFT: CONTROLS -A17b#1
-A18:BN, -X.3k:3 RH_AFT_OP BN
-A18:BL, -X.3k:1 RH_AFT_C- BL
-A18:RD, -X.3k:2 RH_AFT_CL RD

800 mm 22823 800 mm NW17 PP-MOD BLACK
300 mm 22821 200 mm NW10 PP-MOD BLACK
HORN COMPRESSOR -A19#1
-HN_X1 HORN+ +
-HN_X2 INPUT- -
BS
100 mm 22823 100 mm NW17 PP-MOD BLACK
100 mm
-HN_X1#1
-X.3m:2 HORN+
-A19:+ HORN+
-X.3m:1 HORN+
-HN_X.1 27778
INSTALL TO THE MOUNTING CARRIER
150 mm
-HN_X2#1
-XG4-13:1 INPUT-
-A19:- INPUT-
-XG4-12:1 INPUT-
-HN_X.2 27778
INSTALL TO THE MOUNTING CARRIER

1000 mm 22821 900 mm NW10 PP-MOD BLACK
AFT CAMERA -A184#1
-X.3e:1 WIFI/CAMERAS+ +
-XG4-10:1 INPUT- -
BS

SEE CARRIER MOUNTING LABELING

FRONT VIEW
34730 MOUNTING CARRIER
-HN_X.2
ADD LABELS TO THE MOUNTING CARRIER
-HN_X.1

-XG.4: RH. NEG. BUSBAR
ADD LABEL TO BASE OF THE BUSBAR.

NOTICE!
INSTALL CABLES TO DEVICE SO THAT LARGEST TERMINALS ARE CLOSEST TO DEVICES CONDUCTIVE AREA.
EXAMPLE
PR8 RING TERMINAL
25/8 CABLE LUG
35/8 CABLE LUG
DEVICE / BUSBAR CONDUCTIVE AREA

9.5.2023	RK	B1: 2004274; INTRODUCED DRAWING	Date	8.5.2023	NAVIX	Axopar	
7.11.2023	PF/TuM	C2: 2004890; Added light harness (RH_X2 interf.), removed spkr cables; 2005043; Tubing added.	Drawing by	TuM		Boat	Sub-product code: 37069 Product code; Project ID
			Sheet rev.	2		45	MAIN CABIN ROOF HARNESS
Date of modification	Modified by	Description	Project rev.	C	Copyright by	Boat model	Title; HL; Loc; 274 / 444 Sheet

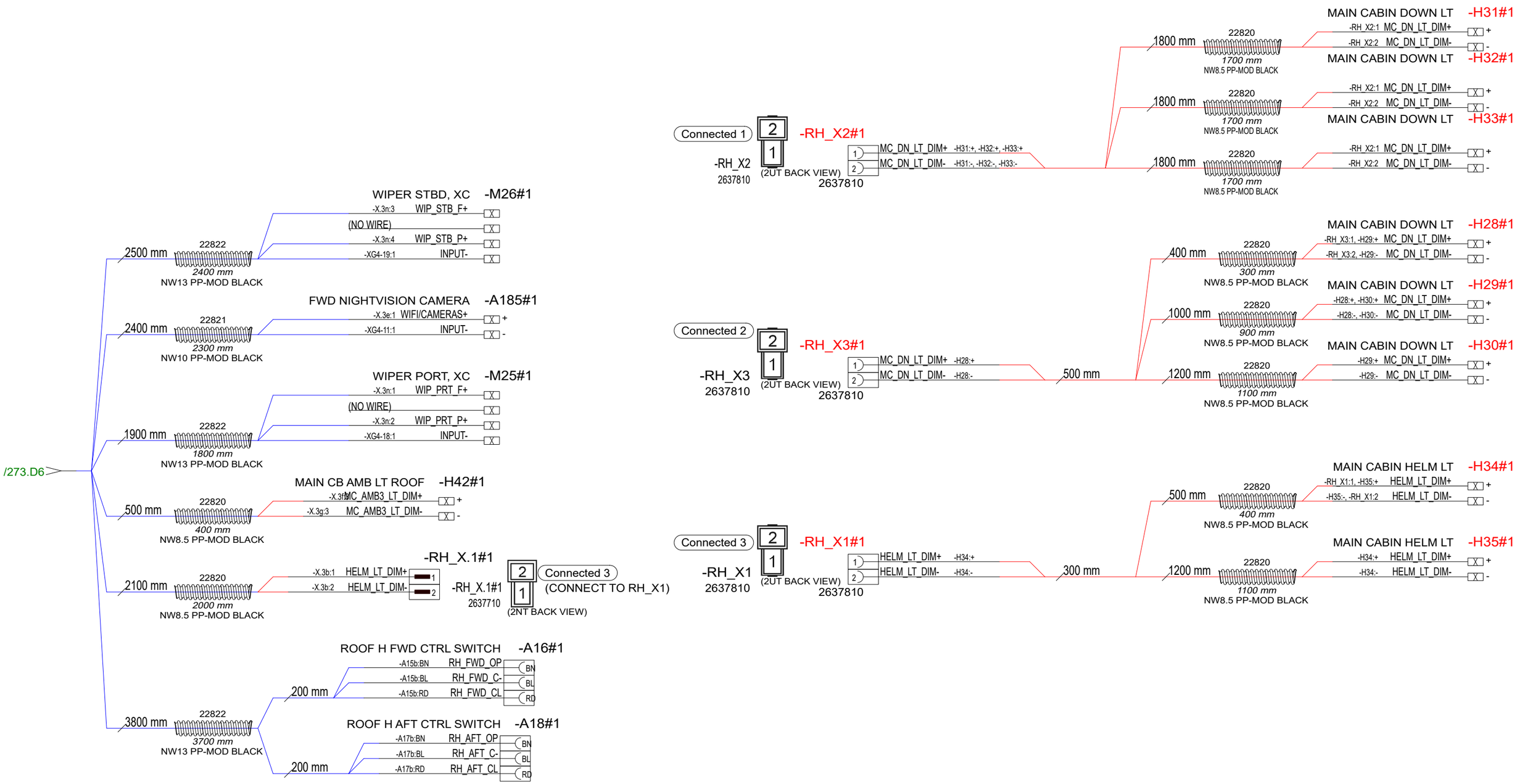

Date of modification	Modified by	Description
9.5.2023	RK	B1: 2004274; INTRODUCED DRAWING.
7.11.2023	PF/TuM	C2: 2004890; Added light harness (RH_X2 interf.), removed spkr cables; 2005043; Tubing added.

Date	7.3.2024
Drawing by	TuM
Sheet rev.	2
Project rev.	C

Copyright by

Axopar		37069	
Boat	Sub-product code	Product code	Project ID
45	MAIN CABIN ROOF HARNESS	HL	275 / 444
Boat model	Title	Loc	Sheet

NOTICE!
VERIFY THAT ALL CABLES HAVE MARKINGS
SHOWN IN EXAMPLE BELOW.

EXEMPTION:
ALL <500mm WIRES AND BLACK WIRES
THIS MARKING IS NOT NEEDED.



EXAMPLE: RED 1,5mm2 WIRE MARKINGS.

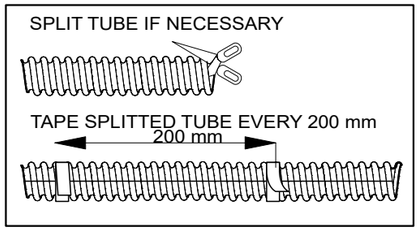

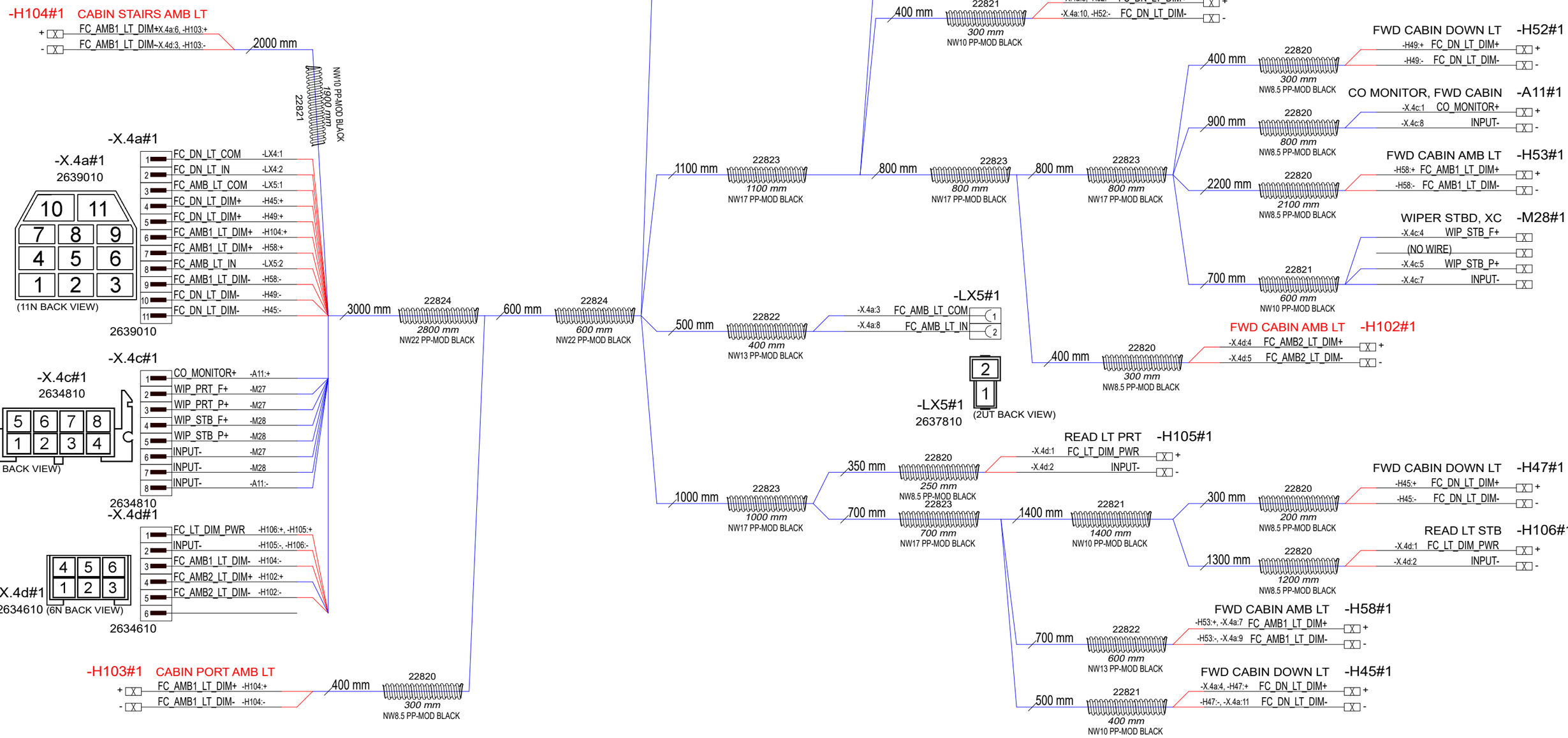

3.5.2023	RK	B1: 2004274; INTRODUCED DRAWING	Date	2.5.2023		Axopar		
17.11.2023	PF/TuM	C2: 2004890; Changes to lights, added X.4d, length changes; 2005043; Tubes added.	Drawing by	TuM		Boat	Sub-product code	37070 Product code / Project ID
			Sheet rev.	2	NAVIX	45	FRONT CABIN ROOF LINER HARNESS	HL
Date of modification	Modified by	Description	Project rev.	C	Copyright by	Boat model	Title	Loc / 276 / 444 Sheet

NOTICE!
VERIFY THAT ALL CABLES HAVE MARKINGS
SHOWN IN EXAMPLE BELOW.

EXEMPTION:
ALL <500mm WIRES AND BLACK WIRES
THIS MARKING IS NOT NEEDED.

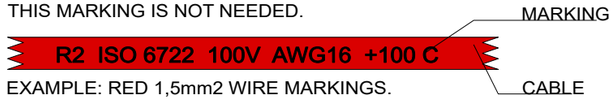

EXAMPLE: RED 1,5mm2 WIRE MARKINGS.

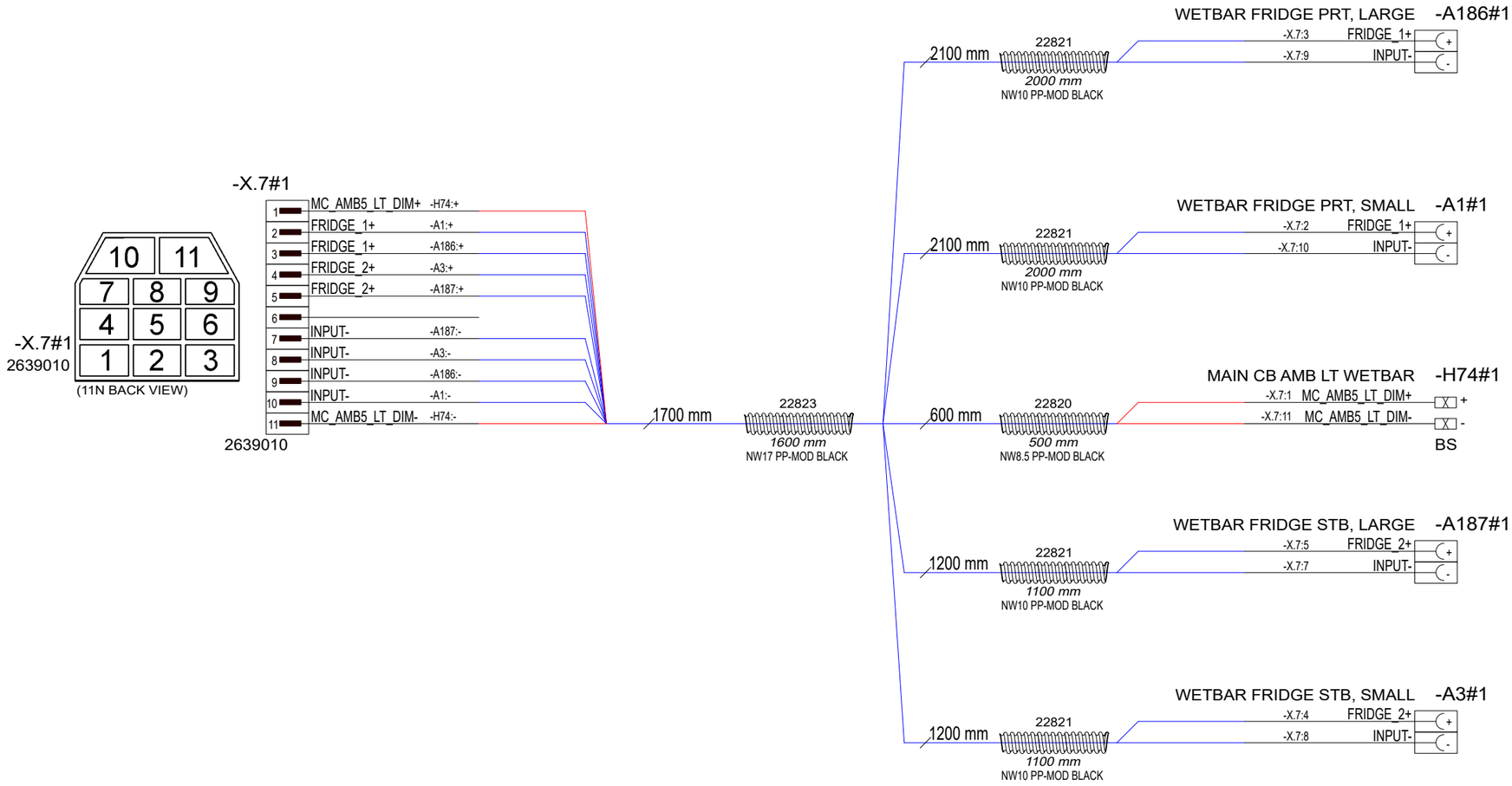

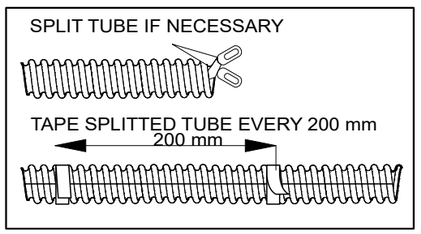

Date of modification	Modified by	Description
5.5.2023	RK	B1: 2004274; INTRODUCED DRAWING
5.3.2024	TuM	C2: 2005043;TUBING ADDED.

Date	5.5.2023
Drawing by	TuM
Sheet rev.	2
Project rev.	C

Copyright by

NAVIX

Axopar		37071	
Boat	Sub-product code	Product code	Project ID
45	WETBAR HARNESS	HL	277 / 444
Boat model	Title	Loc	Sheet

NOTICE! CABLES WITH STICKER

FOR EXAMPLE

-G4a
SERVICE BT: +

NOTICE!
BATTERY CABLES NEED TO ADD MARKINGS
SHOWN IN EXAMPLE BELOW. PRINTED EVERY 120mm.

EXEMPTION:
ALL BLACK WIRES
THIS MARKING IS NOT NEEDED.

MARKING

RK90/115 750Vac/ 1000Vdc AWG0 GR90/115 C

CABLE

EXAMPLE: RED 50mm2 WIRE MARKINGS.

MARKING SHOWN ABOVE ONLY TO CABLES LISTED BELOW.

	EQUIVALENCY: mm2		AWG
LOOK FOR EQUIVALENT AWG SIZE FOR mm2 AND ADD THIS TO CABLE MARKINGS.	50 mm2	=	AWG0
	70 mm2	=	AWG2/0
	95 mm2	=	AWG3/0
FOR EXAMPLE: CABLE SIZE IS 70mm2 --> MARKING AWG2/0.	120 mm2	=	250 kcmil

PORT ENGINE CABLES

INSULATOR FOR BATTERY TERMINAL WITH BOLT RED

11067/456N9V02

-E_G.1a
227

-E_G1a#1 10 70/10	PORT START BT: +	PORT_START_BT+	-M_S1a:1	70 RED	22823 2050 mm NW17 PP-MOD BLACK	2150 mm	-E_G1a:1 PORT_START_BT+	PORT START MS: A -M_S1a#1 10 70/10
-ENG_X1a#1 8 70/8	ENGINE PORT: ENG+	PORT_ENG+	-M_S1b:1	70 RED	22823 1900 mm NW17 PP-MOD BLACK	2000 mm	-ENG_X1a:1 PORT_ENG+	PORT START MS: B -M_S1b#1 10 70/10
-ENG_X1b#1 8 70/8	ENGINE PORT: ENG-	PORT_ENG-	-E_G1b:1	70 YELLOW	22823 1900 mm NW17 PP-MOD BLACK	2000 mm	-ENG_X1b:1 PORT_ENG-	PORT START BT: - -E_G1b#1 10 70/10
-B1-2#1 10 70/10	MAIN DC NEG. BUSBAR	PORT_START_BT-	-E_G1c:1	70 YELLOW	22823 2900 mm NW17 PP-MOD BLACK	3000 mm	-B1-2:1 PORT_START_BT-	PORT START BT: - -E_G1c#1 10 70/10

INSULATOR FOR BATTERY TERMINAL WITH BOLT BLACK

11068/456N9V14

-E_G.1b
228

PORT ENGINE ALTERNATOR CHR CABLES

-D2a#1 8 70/8	PORT ENG. A. ISL: IN	PORT_ALT+	-M14c:1	70 RED	22823 2200 mm NW17 PP-MOD BLACK	2300 mm	-D2a:1 PORT_ALT+	ENGINE PORT: ALT -M14c#1 8 70/8
-D2b#1 8 70/8	PORT ENG. A. ISL: 1 OUT	PT_ALT_PT_ST+	-AL_F1b:1	70 RED	22823 1000 mm NW17 PP-MOD BLACK	1100 mm	-D2b:1 PT_ALT_PT_ST+	PORT ENG DC ALTERNATOR: 2 -AL_F1b#1 8 70/8

INCLUDED:

-ENG_X.1#1
V4100

LABEL:
ENG_X.1: PORT ENG.
JUNCTION BOX

14.4.2023	TuM	B1: 2004274; INRODUCED DRAWING.	Date	12.4.2023	NAVIX	Axopar	
9.11.2023	PF/TuM	C2: 2004890; Lenghts changed, alt. cables ->70mm2; 2005043; Tubing added.	Drawing by	TuM		Boat	Sub-product code: 37072 Product code; Project ID
			Sheet rev.	2		45	ENGINE CABLE SET
Date of modification	Modified by	Description	Project rev.	C	Copyright by	Boat model	Title; HL; Loc; 278 / 444 Sheet

NOTICE! CABLES WITH STICKER

FOR EXAMPLE

-G4a
SERVICE BT: +

NOTICE!
BATTERY CABLES NEED TO ADD MARKINGS
SHOWN IN EXAMPLE BELOW. PRINTED EVERY 120mm.

EXEMPTION:
ALL BLACK WIRES
THIS MARKING IS NOT NEEDED.

MARKING

RK90/115 750Vac/ 1000Vdc AWG0 GR90/115 C

CABLE

EXAMPLE: RED 50mm2 WIRE MARKINGS.

MARKING SHOWN ABOVE ONLY TO CABLES LISTED BELOW.

	EQUIVALENCY: mm2		AWG
LOOK FOR EQUIVALENT AWG SIZE FOR mm2 AND ADD THIS TO CABLE MARKINGS.	50 mm2	=	AWG0
	70 mm2	=	AWG2/0
	95 mm2	=	AWG3/0
FOR EXAMPLE: CABLE SIZE IS 70mm2 --> MARKING AWG2/0.	120 mm2	=	250 kcmil

MID ENGINE CABLES

INSULATOR FOR BATTERY TERMINAL WITH BOLT RED

11067/456N9V02

-E_G.2a
227

-E_G2a#1 10 70/10	MID START BT: +	MID_START_BT+	-M_S2a:1	70 RED	22823 *2050 mm* NW17 PP-MOD BLACK	2150 mm	-E_G2a:1	MID_START_BT+ MID START MS: A -M_S2a#1 10 70/10
-ENG_X2a#1 8 70/8	ENGINE MID: ENG+	MID_ENG+	-M_S2b:1	70 RED	22823 *1500 mm* NW17 PP-MOD BLACK	1600 mm	-ENG_X2a:1	MID_ENG+ MID START MS: B -M_S2b#1 10 70/10
-ENG_X2b#1 8 70/8	ENGINE MID: ENG-	MID_ENG-	-E_G2b:1	70 YELLOW	22823 *1500 mm* NW17 PP-MOD BLACK	1600 mm	-ENG_X2b:1	MID_ENG- MID START BT: - -E_G2b#1 10 70/10
-B1-3#1 10 70/10	MAIN DC NEG. BUSBAR	MID_START_BT-	-E_G2c:1	70 YELLOW	22823 *2900 mm* NW17 PP-MOD BLACK	3000 mm	-B1-3:1	MID_START_BT- MID START BT: - -E_G2c#1 10 70/10

INSULATOR FOR BATTERY TERMINAL WITH BOLT BLACK

-E_G.2b
228

11068/456N9V14

MID ENGINE ALTERNATOR CHR CABLES

-D3a#1 8 70/8	MID ENG. A. ISL: IN	MID_ALT+	-M15c:1	70 RED	22823 *2900 mm* NW17 PP-MOD BLACK	3000 mm	-D3a:1	MID_ALT+ ENGINE MID: ALT -M15c#1 8 70/8
-D3b#1 8 70/8	MID ENG. A. ISL: 1 OUT	MD_ALT_MD_ST+	-AL_F2b:1	70 RED	22823 *500 mm* NW17 PP-MOD BLACK	600 mm	-D3b:1	MD_ALT_MD_ST+ MID ENG DC ALTERNATOR: 2 -AL_F2b#1 8 70/8

INCLUDED:

-ENG_X.2#1

V4100

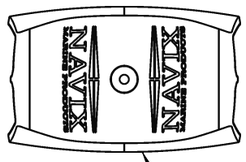

LABEL:
ENG_X.2: MID ENG. JUNCTION BOX

Date of modification	Modified by	Description
14.4.2023	TuM	B1: 2004274; INRODUCED DRAWING.
9.11.2023	PF/TuM	C2: 2004890; Lenghts changed, alt. cables ->70mm2; 2005043; Tubing added.

Date	12.4.2023
Drawing by	TuM
Sheet rev.	2
Project rev.	C

Copyright by

Axopar		37072	
Boat	Sub-product code	Product code	Project ID
45	ENGINE CABLE SET	HL	279 / 444
Boat model	Title	Loc	Sheet

NOTICE! CABLES WITH STICKER

FOR EXAMPLE

-G4a
SERVICE BT: +

NOTICE!
BATTERY CABLES NEED TO ADD MARKINGS
SHOWN IN EXAMPLE BELOW. PRINTED EVERY 120mm.

EXEMPTION:
ALL BLACK WIRES
THIS MARKING IS NOT NEEDED.

MARKING

RK90/115 750Vac/ 1000Vdc AWG0 GR90/115 C

CABLE

EXAMPLE: RED 50mm2 WIRE MARKINGS.

MARKING SHOWN ABOVE ONLY TO CABLES LISTED BELOW.

	EQUIVALENCY: mm2		AWG
LOOK FOR EQUIVALENT AWG SIZE FOR mm2 AND ADD THIS TO CABLE MARKINGS.	50 mm2	=	AWG0
	70 mm2	=	AWG2/0
	95 mm2	=	AWG3/0
FOR EXAMPLE: CABLE SIZE IS 70mm2 --> MARKING AWG2/0.	120 mm2	=	250 kcmil

STBD ENGINE CABLES

INSULATOR FOR BATTERY TERMINAL WITH BOLT RED

11067/456N9V02

-E_G.3a
227

-E_G3a#1	PORT START BT: +	STBD_START_BT+ -M_S3a:1	70/10	70 RED	22823 2050 mm NW17 PP-MOD BLACK	2150 mm	PORT START MS: A -E_G3a:1 STBD_START_BT+	-M_S3a#1 70/10
-ENG_X3a#1	ENGINE STBD: ENG+	STBD_ENG+ -M_S3b:1	70/8	70 RED	22823 600 mm NW17 PP-MOD BLACK	700 mm	PORT START MS: B -ENG_X3a:1 STBD_ENG+	-M_S3b#1 70/10
-ENG_X3b#1	ENGINE STBD: ENG-	STBD_ENG- -E_G3b:1	70/8	70 YELLOW	22823 600 mm NW17 PP-MOD BLACK	700 mm	PORT START BT: - -ENG_X3b:1 STBD_ENG-	-E_G3b#1 70/10
-B1-4#1	MAIN DC NEG. BUSBAR	STBD_START_BT- -E_G3c:1	70/10	70 YELLOW	22823 2900 mm NW17 PP-MOD BLACK	3000 mm	PORT START BT: - -B1-4:1 STBD_START_BT-	-E_G3c#1 70/10

INSULATOR FOR BATTERY TERMINAL WITH BOLT BLACK

11068/456N9V14

-E_G.3b
228

STBD ENGINE ALTERNATOR CHR CABLES

-D4a#1	STBD ENG. A. ISL: IN	STBD_ALT+ -M16c:1	70/8	70 RED	22823 3700 mm NW17 PP-MOD BLACK	3800 mm	ENGINE STBD: ALT -D4a:1 STBD_ALT+	-M16c#1 70/8
-D4b#1	STBD ENG. A. ISL: 1 OUT	SB_ALT_SB_ST+ -AL_F3b:1	70/8	70 RED	22823 150 mm NW17 PP-MOD BLACK	250 mm	STBD ENG DC ALTERNATOR: 2 -D4b:1 SB_ALT_SB_ST+	-AL_F3b#1 70/8

INCLUDED:

-ENG_X.3#1

V4100

LABEL:
ENG_X.3: STDB ENG.
JUNCTION BOX

Date of modification	Modified by	Description					
14.4.2023	TuM	B1: 2004274; INRODUCED DRAWING.	Date	12.4.2023	NAVIX	Axopar	
9.11.2023	PF/TuM	C2: 2004890; Lenghts changed, alt. cables ->70mm2; 2005043; Tubing added.	Drawing by	TuM		Boat	
			Sheet rev.	2		45	ENGINE CABLE SET
			Project rev.	C	Copyright by	Boat model	Title

Sub-product code	37072 Product code	Project ID
	HL	280 / 444
	Loc	Sheet

NOTICE! CABLES WITH STICKER

FOR EXAMPLE

-G4a
SERVICE BT: +

NOTICE!
BATTERY CABLES NEED TO ADD MARKINGS
SHOWN IN EXAMPLE BELOW. PRINTED EVERY 120mm.

EXEMPTION:
ALL BLACK WIRES
THIS MARKING IS NOT NEEDED.

MARKING

R2 ISO 6722 100V AWG6 +100 C

CABLE

EXAMPLE: RED 16mm2 WIRE MARKINGS.

MARKING SHOWN ABOVE ONLY TO CABLES LISTED BELOW.

	EQUIVALENCY: mm2	AWG
LOOK FOR EQUIVALENT AWG SIZE FOR mm2 AND ADD THIS TO CABLE MARKINGS.	10 mm2	= AWG8
	16 mm2	= AWG6
	25 mm2	= AWG3
FOR EXAMPLE: CABLE SIZE IS 25mm2 --> MARKING AWG3.	35 mm2	= AWG2

ENGINE CHARGER DC CABLES

-CH_F1b#1 — PORT ENG BT AC CHARGER: 2
8 — ST_PORT_B_CHR+ -A47a:1
16/8
16 RED — 22821 — *1200 mm* — NW10 PP-MOD BLACK
1300 mm
BATTERY CHARGER 1: 1 — -A47a#1
-CH_F1b:1 ST_PORT_B_CHR+
WES_16

-CH_F2b#1 — MID ENG BT AC CHARGER: 2
8 — ST_MID_B_CHR+ -A47b:1
16/8
16 RED — 22821 — *1700 mm* — NW10 PP-MOD BLACK
1800 mm
BATTERY CHARGER 1: 2 — -A47b#1
-CH_F2b:1 ST_MID_B_CHR+
WES_16

-CH_F3b#1 — STBD ENG BT AC CHARGER: 2
8 — ST_STBD_B_CHR+ -A47c:1
16/8
16 RED — 22821 — *550 mm* — NW10 PP-MOD BLACK
650 mm
BATTERY CHARGER 1: 3 — -A47c#1
-CH_F3b:1 ST_STBD_B_CHR+
WES_16

-B1-17#1 — MAIN DC NEG. BUSBAR
10 — BT_CHARGER_1- -A47d:1
16/10
16 YELLOW — 22821 — *900 mm* — NW10 PP-MOD BLACK
1000 mm
BATTERY CHARGER 1: NEG — -A47d#1
-B1-17:1 BT_CHARGER_1-
WES_16

Date of modification	Modified by	Description
12.4.2023	TuM	B1: 2004274; INTRODUCED DRAWING.
9.11.2023	PF/TuM	C2: 2004890; Lenghts changed, alt. cables ->70mm2; 2005043; Tubing added.

Date 12.4.2023
Drawing by TuM
Sheet rev. 2
Project rev. C

Copyright by NAVIX

Boat: Axopar
Boat model: 45
Sub-product code:
Product code: 37072
Project ID:
Title: ENGINE CABLE SET
HL:
Loc:
Sheet: 281/ 444

NOTICE! CABLES WITH STICKER

FOR EXAMPLE

-G4a
SERVICE BT: +

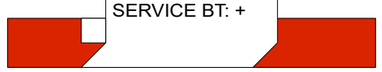

NOTICE!
BATTERY CABLES NEED TO ADD MARKINGS
SHOWN IN EXAMPLE BELOW. PRINTED EVERY 120mm.

EXEMPTION:
ALL BLACK WIRES
THIS MARKING IS NOT NEEDED.

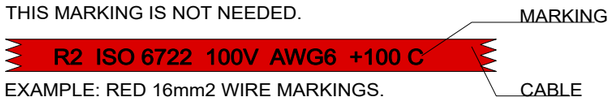

EXAMPLE: RED 16mm2 WIRE MARKINGS.

MARKING SHOWN ABOVE ONLY TO CABLES LISTED BELOW.

	EQUIVALENCY: mm2		AWG
LOOK FOR EQUIVALENT AWG SIZE FOR mm2 AND ADD THIS TO CABLE MARKINGS.	10 mm2	=	AWG8
	16 mm2	=	AWG6
FOR EXAMPLE: CABLE SIZE IS 25mm2 --> MARKING AWG3.	25 mm2	=	AWG3
	35 mm2	=	AWG2

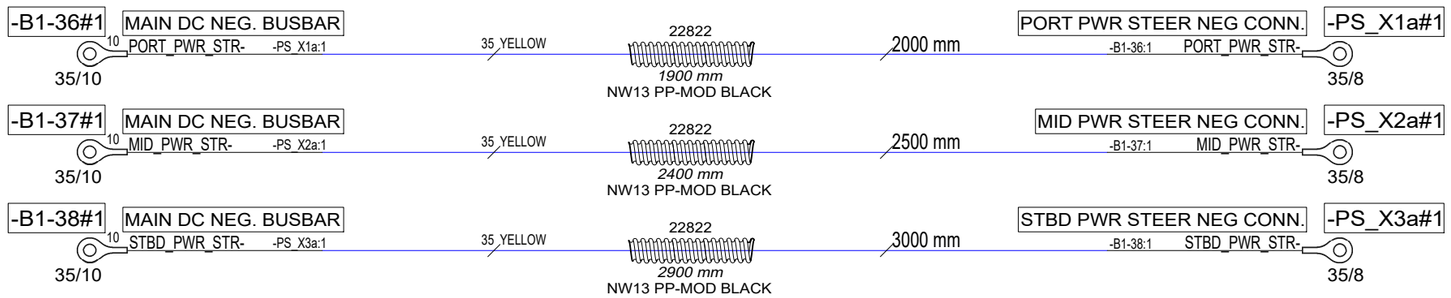

Date of modification	Modified by	Description
12.4.2023	TuM	B1: 2004274; INTRODUCED DRAWING.
15.3.2024	TuM	C2: 2005043; TUBING ADDED.

Date	12.4.2023
Drawing by	TuM
Sheet rev.	2
Project rev.	C

Copyright by

NAVIX

Axopar Boat		37073 Product code	Project ID
45 Boat model	POWER STEER CABLES - JPO Title	HL Loc	282 / 444 Sheet

NOTICE! CABLES WITH STICKER

FOR EXAMPLE

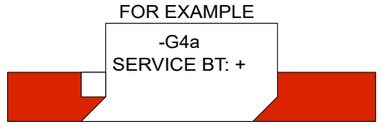

NOTICE!
BATTERY CABLES NEED TO ADD MARKINGS
SHOWN IN EXAMPLE BELOW. PRINTED EVERY 120mm.

EXEMPTION:
ALL BLACK WIRES
THIS MARKING IS NOT NEEDED.

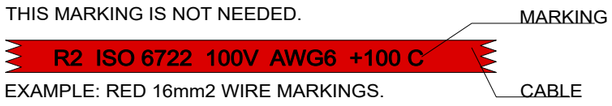

EXAMPLE: RED 16mm2 WIRE MARKINGS.

MARKING SHOWN ABOVE ONLY TO CABLES LISTED BELOW.

	EQUIVALENCY: mm2		AWG
LOOK FOR EQUIVALENT AWG SIZE FOR mm2 AND ADD THIS TO CABLE MARKINGS.	10 mm2	=	AWG8
	16 mm2	=	AWG6
	25 mm2	=	AWG3
FOR EXAMPLE: CABLE SIZE IS 25mm2 --> MARKING AWG3.	35 mm2	=	AWG2

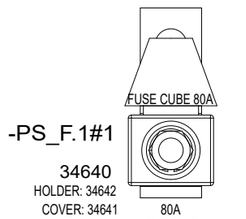

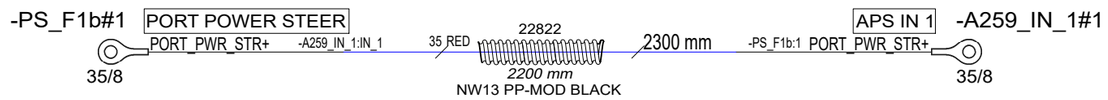

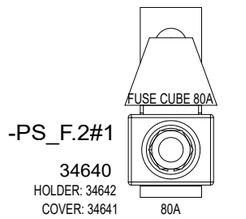

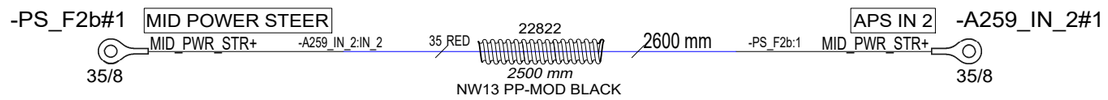

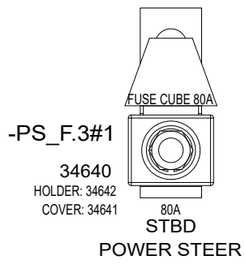

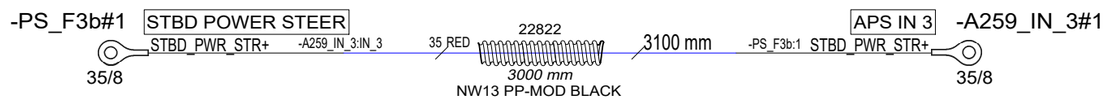

Date of modification	Modified by	Description
11.12.2023	PF/TuM	C1: 2004890; New product; 2005043 Tubing added.

Date	11.12.2023
Drawing by	PF
Sheet rev.	1
Project rev.	C

Copyright by

NAVIX

Axopar		37074	
Boat	Sub-product code	Product code	Project ID
45	POWER STEER CABLES - NO JPO	HL	283 / 444
Boat model	Title	Loc	Sheet

NOTICE! CABLES WITH STICKER

FOR EXAMPLE

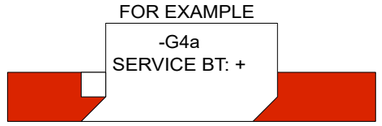

NOTE.
TOTAL LENGTHS OF POSITIVE
AND NEGATIVE CABLES MUST BE SAME
IN ALL SERVICE BATTERY SUPPLY CIRCUITS:
- SERVICE BT 1 CABLES
- SERVICE BT 2 CABLES
- SERVICE BT 3 CABLES
- SERVICE BT 4 CABLES

NOTICE!
BATTERY CABLES NEED TO ADD MARKINGS
SHOWN IN EXAMPLE BELOW. PRINTED EVERY 120mm.

EXEMPTION:
ALL BLACK WIRES
THIS MARKING IS NOT NEEDED.

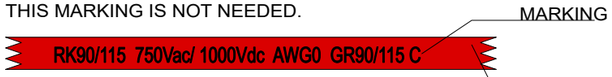

EXAMPLE: RED 50mm2 WIRE MARKINGS.

MARKING SHOWN ABOVE ONLY TO CABLES LISTED BELOW.

LOOK FOR EQUIVALENT AWG SIZE FOR mm2
AND ADD THIS TO CABLE MARKINGS.

FOR EXAMPLE:
CABLE SIZE IS 70mm2 --> MARKING AWG2/0.

EQUIVALENCY:

mm2		AWG
50 mm2	=	AWG0
70 mm2	=	AWG2/0
95 mm2	=	AWG3/0
120 mm2	=	250 kcmil

SERVICE BT 1 CABLES (PORT)

INSULATOR FOR BATTERY TERMINAL WITH BOLT RED

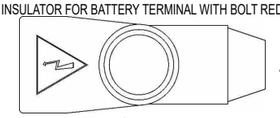

11067/456N9V02

-S_G.1a
227

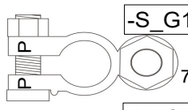

70/10

-S_G1a#1 — ESSENTIAL SERVICE BT 1: +
10 SERV_BT1+ -SM_F1a:1
70 RED
22823
1700 mm
NW17 PP-MOD BLACK
1800 mm
SERVICE MAIN 1: 1 -S_G1a:1 SERV_BT1+ 8 -SM_F1a#1
70/8

-M_S7a#1 — SERVICE MSU MAIN 1: 1
8 SERV_BT1_F+ -SM_F1b:1
70/8
70 RED
22823
8100 mm
NW17 PP-MOD BLACK
8200 mm
SERVICE MAIN 1: 2 -M_S7a:1 SERV_BT1_F+ 8 -SM_F1b#1
70/8

INSULATOR FOR BATTERY TERMINAL WITH BOLT BLACK

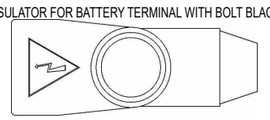

11068/456N9V14

-S_G.1b
228

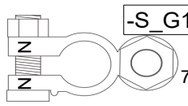

70/10

-S_G1b#1 — ESSENTIAL SERVICE BT 1: -
10 SERV_BT1_S- -SR_XG1a:1
70 YELLOW
22823
2400 mm
NW17 PP-MOD BLACK
2500 mm
SERV. BT NEG BUSBAR -S_G1b:1 SERV_BT1_S- 10 -SR_XG1a#1
70/10

SERVICE BT 2 CABLES (PORT)

INSULATOR FOR BATTERY TERMINAL WITH BOLT RED

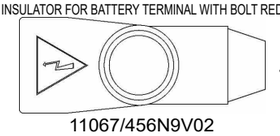

11067/456N9V02

-S_G.2a
227

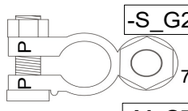

70/10

-S_G2a#1 — ESSENTIAL SERVICE BT 2: +
10 SERV_BT2+ -SM_F2a:1
70 RED
22823
1700 mm
NW17 PP-MOD BLACK
1800 mm
SERVICE MAIN 2: 1 -S_G2a:1 SERV_BT2+ 8 -SM_F2a#1
70/8

-M_S7b#1 — SERVICE MSU MAIN 2: 1
8 SERV_BT2_F+ -SM_F2b:1
70/8
70 RED
22823
8100 mm
NW17 PP-MOD BLACK
8200 mm
SERVICE MAIN 2: 2 -M_S7b:1 SERV_BT2_F+ 8 -SM_F2b#1
70/8

INSULATOR FOR BATTERY TERMINAL WITH BOLT BLACK

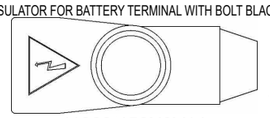

11068/456N9V14

-S_G.2b
228

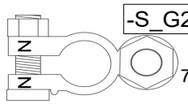

70/10

-S_G2b#1 — ESSENTIAL SERVICE BT 2: -
10 SERV_BT2_S- -SR_XG1b:1
70 YELLOW
22823
2400 mm
NW17 PP-MOD BLACK
2500 mm
SERV. BT NEG BUSBAR -S_G2b:1 SERV_BT2_S- 10 -SR_XG1b#1
70/10

INCLUDED:

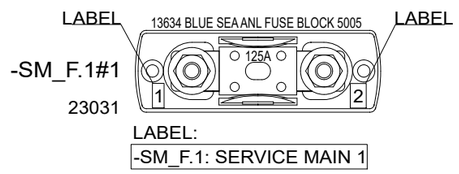

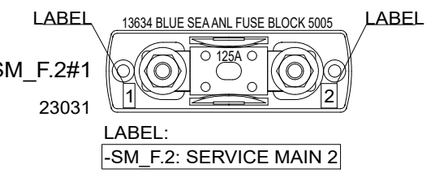

LABEL INSTRUCTIONS

NOTICE! PUT LABELS TO FUSE HOLDER
BASE - NOT TO COVER.

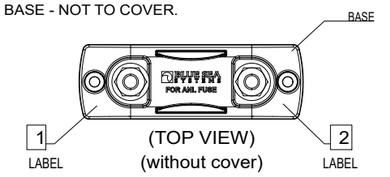

Date of modification	Modified by	Description
12.4.2023	TuM	B1: 2004274; INTRODUCED DRAWING.
15.3.2024	TuM	C2: 2005043 Tubing added.

Date 12.4.2023
Drawing by TuM
Sheet rev. 2
Project rev. C

Copyright by NAVIX

Boat	Sub-product code	Product code	Project ID
Axopar		37075	
45	STANDARD SERVICE BT CABLE SET	HL	284 / 444
Boat model	Title	Loc	Sheet

NOTICE! CABLES WITH STICKER

FOR EXAMPLE

-G4a
SERVICE BT: +

NOTE.
TOTAL LENGTHS OF POSITIVE
AND NEGATIVE CABLES MUST BE SAME
IN ALL SERVICE BATTERY SUPPLY CIRCUITS:
- SERVICE BT 1 CABLES
- SERVICE BT 2 CABLES
- SERVICE BT 3 CABLES
- SERVICE BT 4 CABLES

NOTICE!
BATTERY CABLES NEED TO ADD MARKINGS
SHOWN IN EXAMPLE BELOW. PRINTED EVERY 120mm.

EXEMPTION:
ALL BLACK WIRES
THIS MARKING IS NOT NEEDED.



EXAMPLE: RED 50mm2 WIRE MARKINGS.

MARKING SHOWN ABOVE ONLY TO CABLES LISTED BELOW.

LOOK FOR EQUIVALENT AWG SIZE FOR mm2
AND ADD THIS TO CABLE MARKINGS.

FOR EXAMPLE:
CABLE SIZE IS 70mm2 --> MARKING AWG2/0.

EQUIVALENCY:

mm2		AWG
50 mm2	=	AWG0
70 mm2	=	AWG2/0
95 mm2	=	AWG3/0
120 mm2	=	250 kcmil

SERVICE BT 3 CABLES (STBD)

INSULATOR FOR BATTERY TERMINAL WITH BOLT RED

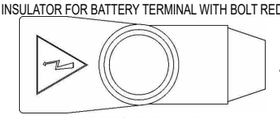

11067/456N9V02

-S_G.3a
227

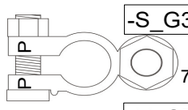

-S_G3a#1 — 10 — 70/10
ESSENTIAL SERVICE BT 3: +
SERV_BT3+ -SM_F3a:1
70 RED
22823
1700 mm
NW17 PP-MOD BLACK
1800 mm
SERVICE MAIN 3: 1
-S_G3a:1 SERV_BT3+
-SM_F3a#1 — 8 — 70/8

-M_S7c#1 — 8 — 70/8
SERVICE MSU MAIN 3: 1
SERV_BT3_F+ -SM_F3b:1
70 RED
22823
3100 mm
NW17 PP-MOD BLACK
3200 mm
SERVICE MAIN 3: 2
-M_S7c:1 SERV_BT3_F+
-SM_F3b#1 — 8 — 70/8

INSULATOR FOR BATTERY TERMINAL WITH BOLT BLACK

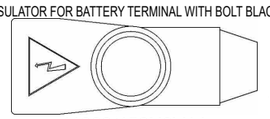

11068/456N9V14

-S_G.3b
228

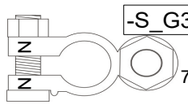

-S_G3b#1 — 10 — 70/10
ESSENTIAL SERVICE BT 3: -
SERV_BT3_S- -SR_XG1c:1
70 YELLOW
22823
7400 mm
NW17 PP-MOD BLACK
7500 mm
SERV. BT NEG BUSBAR
-S_G3b:1 SERV_BT3_S-
-SR_XG1c#1 — 10 — 70/10

SERVICE BT 4 CABLES (STBD)

INSULATOR FOR BATTERY TERMINAL WITH BOLT RED

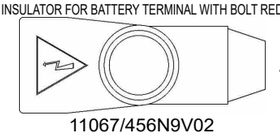

11067/456N9V02

-S_G.4a
227

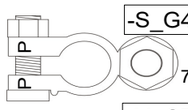

-S_G4a#1 — 10 — 70/10
ESSENTIAL SERVICE BT 4: +
SERV_BT4+ -SM_F4a:1
70 RED
22823
1700 mm
NW17 PP-MOD BLACK
1800 mm
SERVICE MAIN 4: 1
-S_G4a:1 SERV_BT4+
-SM_F4a#1 — 8 — 70/8

-M_S7d#1 — 8 — 70/8
SERVICE MSU MAIN 4: 1
SERV_BT4_F+ -SM_F4b:1
70 RED
22823
3100 mm
NW17 PP-MOD BLACK
3200 mm
SERVICE MAIN 4: 2
-M_S7d:1 SERV_BT4_F+
-SM_F4b#1 — 8 — 70/8

INSULATOR FOR BATTERY TERMINAL WITH BOLT BLACK

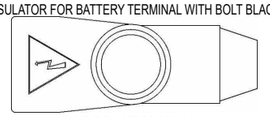

11068/456N9V14

-S_G.4b
228

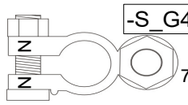

-S_G4b#1 — 10 — 70/10
ESSENTIAL SERVICE BT 4: -
SERV_BT4_S- -SR_XG1d:1
70 YELLOW
22823
7400 mm
NW17 PP-MOD BLACK
7500 mm
SERV. BT NEG BUSBAR
-S_G4b:1 SERV_BT4_S-
-SR_XG1d#1 — 10 — 70/10

INCLUDED:

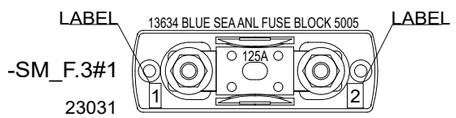

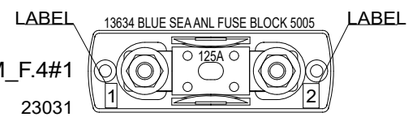

LABEL INSTRUCTIONS

NOTICE! PUT LABELS TO FUSE HOLDER
BASE - NOT TO COVER.

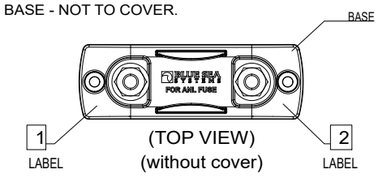

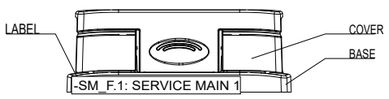

(SIDE VIEW)
(with cover)

Date of modification	Modified by	Description
12.4.2023	TuM	B1: 2004274; INTRODUCED DRAWING.
15.3.2024	TuM	C2: 2005043 Tubing added.

Date 12.4.2023
Drawing by TuM
Sheet rev. 2
Project rev. C

Copyright by

NAVIX

Boat: Axopar
Boat model: 45
Sub-product code:
Product code: 37075
Project ID:
Title: STANDARD SERVICE BT CABLE SET
Loc: HL
Sheet: 285 / 444

NOTICE! CABLES WITH STICKER

FOR EXAMPLE

-G4a
SERVICE BT: +

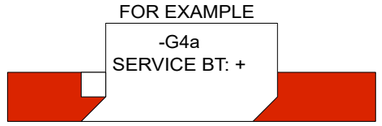

NOTICE!
BATTERY CABLES NEED TO ADD MARKINGS
SHOWN IN EXAMPLE BELOW.

EXEMPTION:
ALL BLACK WIRES
THIS MARKING IS NOT NEEDED.

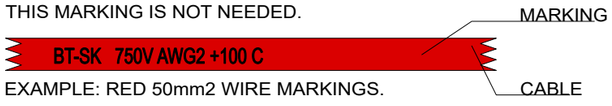

EXAMPLE: RED 50mm2 WIRE MARKINGS.

MARKING SHOWN ABOVE ONLY TO CABLES LISTED BELOW.

LOOK FOR EQUIVALENT AWG SIZE FOR mm2
AND ADD THIS TO CABLE MARKINGS.

FOR EXAMPLE:
CABLE SIZE IS 70mm2 --> MARKING AWG2/0.

EQUIVALENCY:

mm2		AWG
25 mm2	=	AWG3
35 mm2	=	AWG2
50 mm2	=	AWG0
70 mm2	=	AWG2/0
95 mm2	=	AWG3/0
120 mm2	=	250 kcmil

TECHNICAL FUSE UNIT DC SUPPLY CABLES

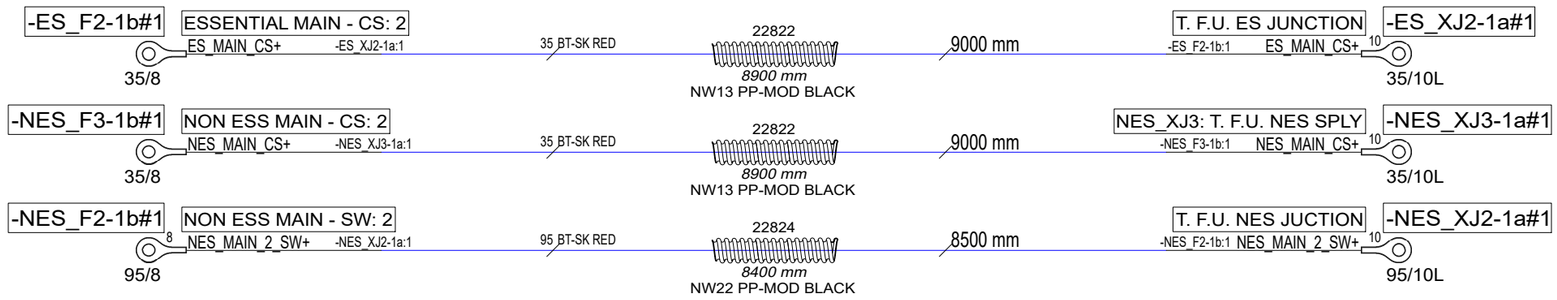

WARDROBE FUSE UNIT DC SUPPLY CABLES

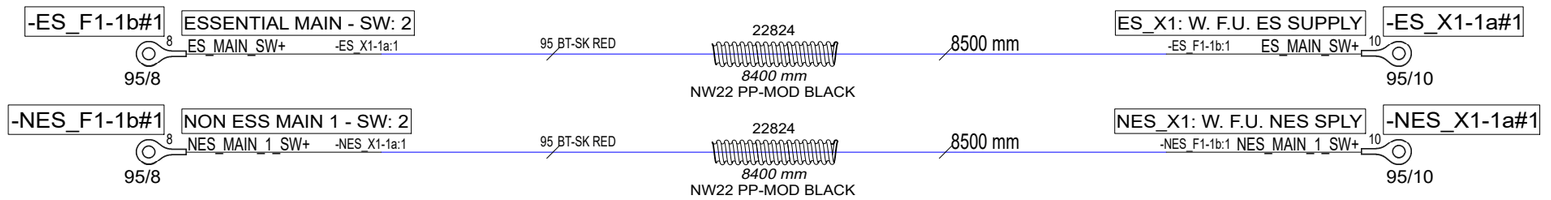

Date of modification	Modified by	Description
12.4.2023	TuM	B1: 2004274; INTRODUCED DRAWING.
15.3.2024	TuM	C2: 2005043 Tubing added.

Date	12.4.2023
Drawing by	TuM
Sheet rev.	2
Project rev.	C

Copyright by NAVIX

Axopar Boat		37075 Product code		Project ID
45 Boat model	STANDARD SERVICE BT CABLE SET Title		HL Loc	286 / 444 Sheet

NOTICE! CABLES WITH STICKER

FOR EXAMPLE

-G4a
SERVICE BT: +

NOTICE!
BATTERY CABLES NEED TO ADD MARKINGS
SHOWN IN EXAMPLE BELOW. PRINTED EVERY 120mm.

EXEMPTION:
ALL BLACK WIRES
THIS MARKING IS NOT NEEDED.

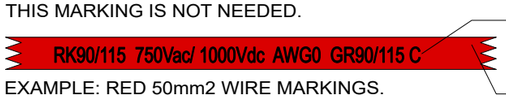

EXAMPLE: RED 50mm2 WIRE MARKINGS.

MARKING SHOWN ABOVE ONLY TO CABLES LISTED BELOW.

	EQUIVALENCY: mm2		AWG
LOOK FOR EQUIVALENT AWG SIZE FOR mm2 AND ADD THIS TO CABLE MARKINGS.	50 mm2	=	AWG0
	70 mm2	=	AWG2/0
	95 mm2	=	AWG3/0
FOR EXAMPLE: CABLE SIZE IS 70mm2 --> MARKING AWG2/0.	120 mm2	=	250 kcmil

ALTERNATOR CHR CABLES

-AL_F4-1b#1	PORT ENG DC ALTERNATOR: 2	PT_ALT_SERV+ -D2-1c:1	70 RED	22823 *2800 mm* NW17 PP-MOD BLACK	2900 mm	PORT ENG. A. ISL: 2 OUT	-D2-1c#1
70/8						-AL_F4-1b:1 PT_ALT_SERV+	70/8
-AL_F5-1b#1	MID ENG DC ALTERNATOR: 2	MD_ALT_SERV+ -D3-1c:1	70 RED	22823 *2800 mm* NW17 PP-MOD BLACK	2900 mm	MID ENG. A. ISL: 2 OUT	-D3-1c#1
70/8						-AL_F5-1b:1 MD_ALT_SERV+	70/8
-AL_F6-1b#1	STBD ENG DC ALTERNATOR: 2	SB_ALT_SERV+ -D4-1c:1	70 RED	22823 *2800 mm* NW17 PP-MOD BLACK	2900 mm	STBD ENG. A. ISL: 2 OUT	-D4-1c#1
70/8						-AL_F6-1b:1 SB_ALT_SERV+	70/8

EMERGENCY CROSS OVER CABLES

-EC_F4-1b#1	EMRG CR O PORT SERV: 2	PORT_EMERG+ -EC_F1-1b:1	120 RED	22824 *1700 mm* NW22 PP-MOD BLACK	1800 mm	EMRG CR O PORT START: 2	-EC_F1-1b#1
120/8						-EC_F4-1b:1 PORT_EMERG+	120/8
-EC_F5-1b#1	EMRG CR O MID SERV: 2	MID_EMERG+ -EC_F2-1b:1	120 RED	22824 *2200 mm* NW22 PP-MOD BLACK	2300 mm	EMRG CR O MID START: 2	-EC_F2-1b#1
120/8						-EC_F5-1b:1 MID_EMERG+	120/8
-EC_F6-1b#1	EMRG CR O STBD SERV: 2	STBD_EMERG+ -EC_F3-1b:1	120 RED	22824 *2700 mm* NW22 PP-MOD BLACK	2800 mm	EMRG CR O STBD START: 2	-EC_F3-1b#1
120/8						-EC_F6-1b:1 STBD_EMERG+	120/8

NEGATIVE LINK CABLE TO HEAVY CONSUMER BUSBAR CABLE

-B1-21#1	MAIN DC NEG. BUSBAR	NESS_H_LOADS- -B3-2:1	120 YELLOW	22824 *6900 mm* NW22 PP-MOD BLACK	CHECK LENGTH 7000 mm	N ESS H LOADS NEG BUSBAR	-B3-2#1
120/10						-B1-21:1 NESS_H_LOADS-	120/10

ADD LINK TO B.3 BUSBAR IN STANDARD VERSION

NEW CABLE

B.3 ADDED

INCLUDED:

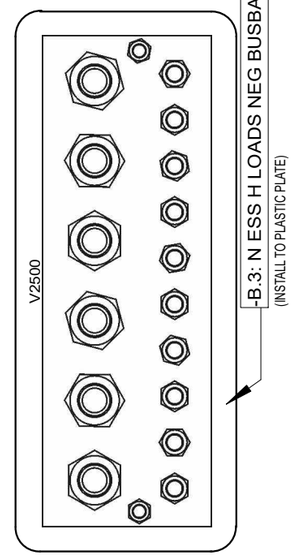

Date of modification	Modified by	Description
12.4.2023	TuM	B1: 2004274; INTRODUCED DRAWING.
15.3.2024	TuM	C2: 2005043 Tubing added.

Date	12.4.2023
Drawing by	TuM
Sheet rev.	2
Project rev.	C

Copyright by NAVIX

Axopar		37075	
Boat	Sub-product code	Product code	Project ID
45	STANDARD SERVICE BT CABLE SET	HL	287 / 444
Boat model	Title	Loc	Sheet

NOTICE!
BATTERY CABLES NEED TO ADD MARKINGS
SHOWN IN EXAMPLE BELOW. PRINTED EVERY 120mm.

-2-

EXEMPTION:
ALL BLACK WIRES
THIS MARKING IS NOT NEEDED.

MARKING

R2 ISO 6722 100V AWG6 +100 C

CABLE

EXAMPLE: RED 16mm2 WIRE MARKINGS.

MARKING SHOWN ABOVE ONLY TO CABLES LISTED BELOW.

	EQUIVALENCY: mm2		AWG
LOOK FOR EQUIVALENT AWG SIZE FOR mm2 AND ADD THIS TO CABLE MARKINGS.	10 mm2	=	AWG8
	16 mm2	=	AWG6
	25 mm2	=	AWG3
FOR EXAMPLE: CABLE SIZE IS 25mm2 --> MARKING AWG3.	35 mm2 95 mm2	= =	AWG2 AWG3/0

NOTICE!
BATTERY CABLES NEED TO ADD MARKINGS
SHOWN IN EXAMPLE BELOW. PRINTED EVERY 120mm.

-1-

EXEMPTION:
ALL BLACK WIRES
THIS MARKING IS NOT NEEDED.

MARKING

RK90/115 750Vac/ 1000Vdc AWG0 GR90/115 C

CABLE

EXAMPLE: RED 50mm2 WIRE MARKINGS.

MARKING SHOWN ABOVE ONLY TO CABLES LISTED BELOW.

	EQUIVALENCY: mm2		AWG
LOOK FOR EQUIVALENT AWG SIZE FOR mm2 AND ADD THIS TO CABLE MARKINGS.	50 mm2	=	AWG0
	70 mm2	=	AWG2/0
	95 mm2	=	AWG3/0
FOR EXAMPLE: CABLE SIZE IS 70mm2 --> MARKING AWG2/0.	120 mm2	=	250 kcmil

INVERTER/ CHARGER DC CABLES

-IM_F5a#1	NON ESS SERV MAIN 1: 1	INV/CHR_DC_MS+	-M_S8-1a:1	120 RED	22824 4400 mm NW22 PP-MOD BLACK	4500 mm	-1-	INV/CHR MSU IN	-M_S8-1a#1
120/8								-IM_F5a:1 INV/CHR_DC_MS+	120/8
-IM_F6a#1	NON ESS SERV MAIN 2: 1	INV/CHR_DC_MS+	-M_S8-1b:1	120 RED	22824 4400 mm NW22 PP-MOD BLACK	4500 mm	-1-	INV/CHR MSU IN	-M_S8-1b#1
120/8								-IM_F6a:1 INV/CHR_DC_MS+	120/8
-A77a#1	INV/CHR: DC+ (BAT+)	INV/CHR_DC+	-M_S8-1e:1	120 RED	22824 400 mm NW22 PP-MOD BLACK	500 mm	-1-	INV/CHR MSU OUT	-M_S8-1e#1
120/8								-A77a:BAT+ INV/CHR_DC+	120/8
-A77b#1	INV/CHR: DC+ (BAT+)	INV/CHR_DC+	-M_S8-1f:1	120 RED	22824 400 mm NW22 PP-MOD BLACK	500 mm	-1-	INV/CHR MSU OUT	-M_S8-1f#1
120/8								-A77b:BAT+ INV/CHR_DC+	120/8
-A77c#1	INV/CHR: DC- (BAT-)	INV/CHR_DC-	-B1-27:1	120 YELLOW	22824 3700 mm NW22 PP-MOD BLACK	3800 mm	-1-	MAIN DC NEG. BUSBAR	-B1-27#1
120/8								-A77c:BAT- INV/CHR_DC-	120/10
-A77d#1	INV/CHR: DC- (BAT-)	INV/CHR_DC-	-B1-28:1	120 YELLOW	22824 3700 mm NW22 PP-MOD BLACK	3800 mm	-1-	MAIN DC NEG. BUSBAR	-B1-28#1
120/8								-A77d:BAT- INV/CHR_DC-	120/10
-A77gnd#1	INV/CHR: CASE GND	INV/CHR_PE	-B1-29:1	95 R2 95 KEVI - YELLOW/GREEN	22824 3700 mm NW22 PP-MOD BLACK	3800 mm	-2-	MAIN DC NEG. BUSBAR	-B1-29#1
95/8								-A77gnd:PE INV/CHR_PE	95/10

NOTE.
POSITIVE CABLES MUST TO BE SAME LENGTH.

NOTE.
POSITIVE CABLES MUST TO BE SAME LENGTH.

NOTE.
NEGATIVE CABLES MUST TO BE SAME LENGTH.

NOTICE! CABLES WITH STICKER

FOR EXAMPLE

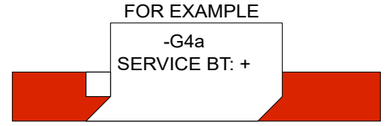

Date of modification	Modified by	Description
12.4.2023	TuM	A1: 2004274; INTRODUCED DRAWING.
15.3.2024	TuM	C2: 2005043 Tubing added.

Date 12.4.2023
Drawing by TuM
Sheet rev. 2
Project rev. C

Copyright by

Axopar — Boat
45 — Boat model
Sub-product code
37075 — Product code
Project ID
STANDARD SERVICE BT CABLE SET — Title
HL — Loc
288 / 444 — Sheet

NOTICE!
BATTERY CABLES NEED TO ADD MARKINGS
SHOWN IN EXAMPLE BELOW. PRINTED EVERY 120mm.

EXEMPTION:
ALL BLACK WIRES
THIS MARKING IS NOT NEEDED.



EXAMPLE: RED 50mm2 WIRE MARKINGS.

MARKING SHOWN ABOVE ONLY TO CABLES LISTED BELOW.

	EQUIVALENCY:		
	mm2		AWG
LOOK FOR EQUIVALENT AWG SIZE FOR mm2 AND ADD THIS TO CABLE MARKINGS.	50 mm2	=	AWG0
	70 mm2	=	AWG2/0
	95 mm2	=	AWG3/0
FOR EXAMPLE: CABLE SIZE IS 70mm2 --> MARKING AWG2/0.	120 mm2	=	250 kcmil

NOTICE! CABLES WITH STICKER

FOR EXAMPLE

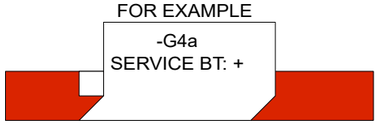

NOTICE!
BATTERY CABLES NEED TO ADD MARKINGS
SHOWN IN EXAMPLE BELOW.

EXEMPTION:
ALL BLACK WIRES
THIS MARKING IS NOT NEEDED.



EXAMPLE: RED 50mm2 WIRE MARKINGS.

MARKING SHOWN ABOVE ONLY TO CABLES LISTED BELOW.

	EQUIVALENCY:		
	mm2		AWG
	25 mm2	=	AWG3
LOOK FOR EQUIVALENT AWG SIZE FOR mm2 AND ADD THIS TO CABLE MARKINGS.	35 mm2	=	AWG2
	50 mm2	=	AWG0
	70 mm2	=	AWG2/0
	95 mm2	=	AWG3/0
FOR EXAMPLE: CABLE SIZE IS 70mm2 --> MARKING AWG2/0.	120 mm2	=	250 kcmil

ESSENTIAL SERVICE BT CABLES

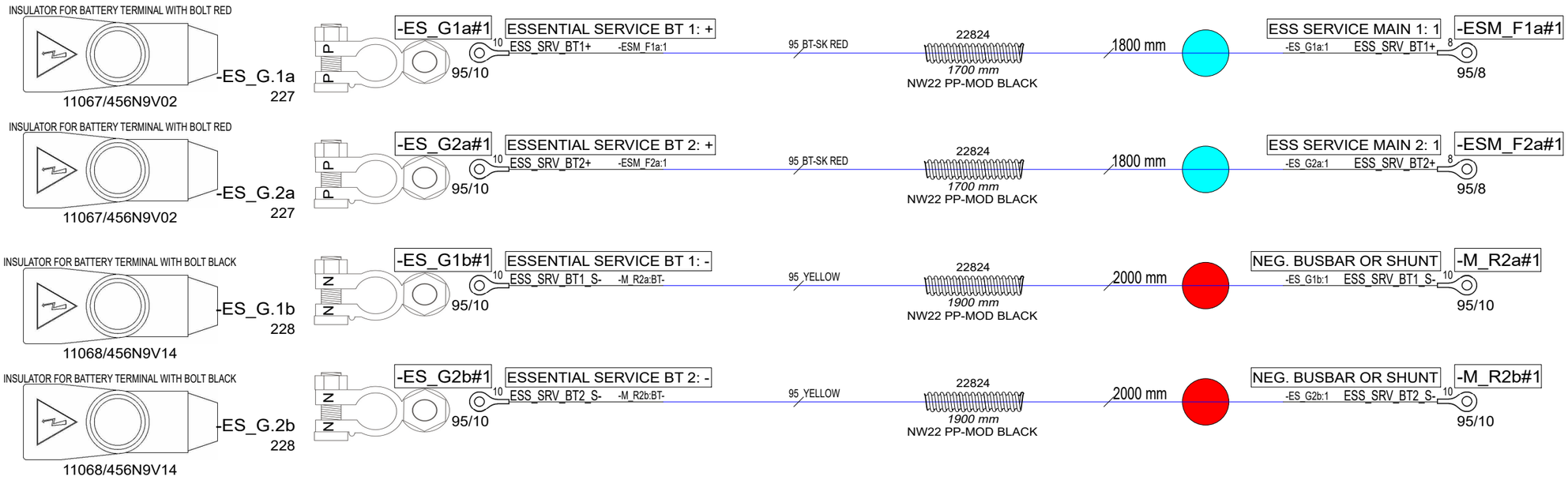

Date of modification	Modified by	Description
13.4.2023	TuM	B1: 2004274; INTRODUCED DRAWING.
9.11.2023	PF/TuM	C2: 2004890; Lenghts changed, alt. cables ->70mm2; 2005043; Tubes added.

Date	13.4.2023
Drawing by	TuM
Sheet rev.	2
Project rev.	C

Copyright by NAVIX

Axopar		37076	
Boat	Sub-product code	Product code	Project ID
45	ZERO EM ESS SERVICE BT CABLE SET	HL	289 / 444
Boat model	Title	Loc	Sheet

NOTICE! CABLES WITH STICKER

FOR EXAMPLE

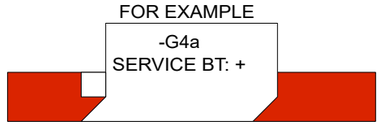

NOTICE!
BATTERY CABLES NEED TO ADD MARKINGS
SHOWN IN EXAMPLE BELOW.

EXEMPTION:
ALL BLACK WIRES
THIS MARKING IS NOT NEEDED.

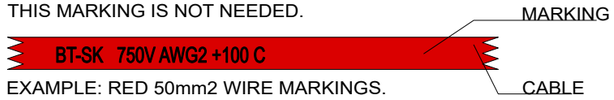

EXAMPLE: RED 50mm2 WIRE MARKINGS.

MARKING SHOWN ABOVE ONLY TO CABLES LISTED BELOW.

LOOK FOR EQUIVALENT AWG SIZE FOR mm2
AND ADD THIS TO CABLE MARKINGS.

FOR EXAMPLE:
CABLE SIZE IS 70mm2 --> MARKING AWG2/0.

EQUIVALENCY:

mm2		AWG
25 mm2	=	AWG3
35 mm2	=	AWG2
50 mm2	=	AWG0
70 mm2	=	AWG2/0
95 mm2	=	AWG3/0
120 mm2	=	250 kcmil

TECHNICAL FUSE UNIT DC SUPPLY CABLES

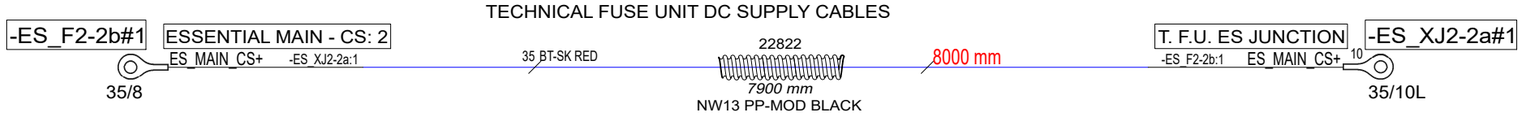

WARDROBE FUSE UNIT DC SUPPLY CABLES

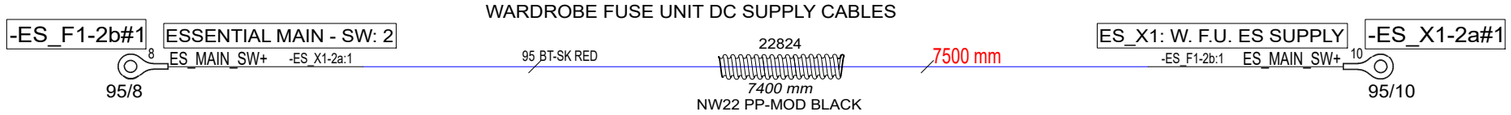

Date of modification	Modified by	Description
13.4.2023	TuM	B1: 2004274; INTRODUCED DRAWING.
9.11.2023	PF/TuM	C2: 2004890; Lenghts changed, alt. cables ->70mm2; 2005043; Tubes added.

Date 13.4.2023
Drawing by TuM
Sheet rev. 2
Project rev. C

Copyright by NAVIX

Boat: Axopar
Boat model: 45
Sub-product code:
Product code: 37076
Project ID:
Title: ZERO EM ESS SERVICE BT CABLE SET
Loc: HL
Sheet: 290 / 444

NOTICE!
BATTERY CABLES NEED TO ADD MARKINGS
SHOWN IN EXAMPLE BELOW.

EXEMPTION:
ALL BLACK WIRES
THIS MARKING IS NOT NEEDED.

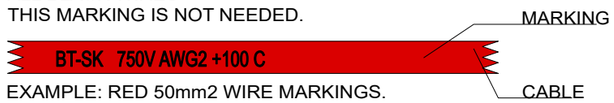

EXAMPLE: RED 50mm2 WIRE MARKINGS.

MARKING SHOWN ABOVE ONLY TO CABLES LISTED BELOW.

LOOK FOR EQUIVALENT AWG SIZE FOR mm2
AND ADD THIS TO CABLE MARKINGS.

FOR EXAMPLE:
CABLE SIZE IS 70mm2 --> MARKING AWG2/0.

EQUIVALENCY:

mm2		AWG
25 mm2	=	AWG3
35 mm2	=	AWG2
50 mm2	=	AWG0
70 mm2	=	AWG2/0
95 mm2	=	AWG3/0
120 mm2	=	250 kcmil

NOTICE! CABLES WITH STICKER

FOR EXAMPLE

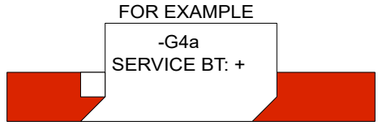

NOTICE!
BATTERY CABLES NEED TO ADD MARKINGS
SHOWN IN EXAMPLE BELOW. PRINTED EVERY 120mm.

EXEMPTION:
ALL BLACK WIRES
THIS MARKING IS NOT NEEDED.

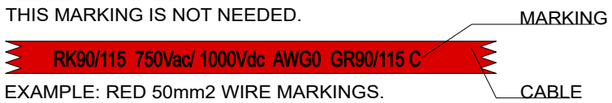

EXAMPLE: RED 50mm2 WIRE MARKINGS.

MARKING SHOWN ABOVE ONLY TO CABLES LISTED BELOW.

LOOK FOR EQUIVALENT AWG SIZE FOR mm2
AND ADD THIS TO CABLE MARKINGS.

FOR EXAMPLE:
CABLE SIZE IS 70mm2 --> MARKING AWG2/0.

EQUIVALENCY:

mm2		AWG
50 mm2	=	AWG0
70 mm2	=	AWG2/0
95 mm2	=	AWG3/0
120 mm2	=	250 kcmil

ALTERNATOR CHR CABLES

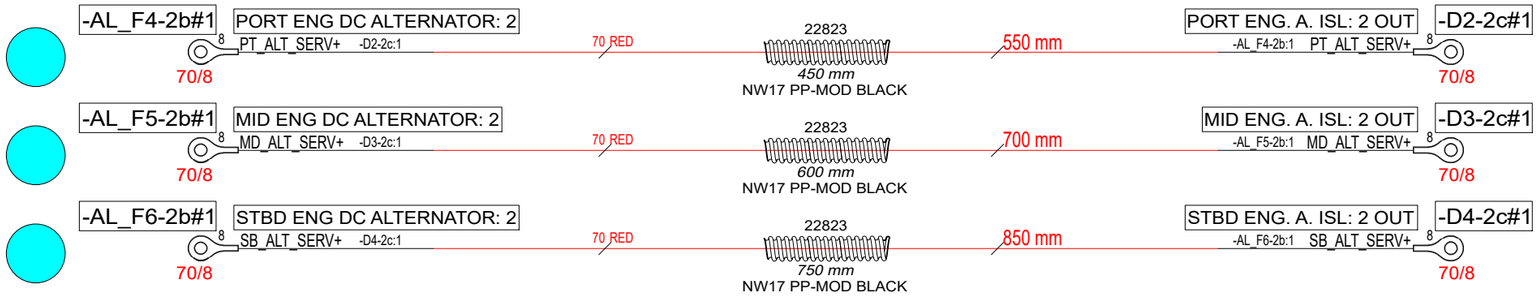

EMERGENCY CROSS OVER CABLES

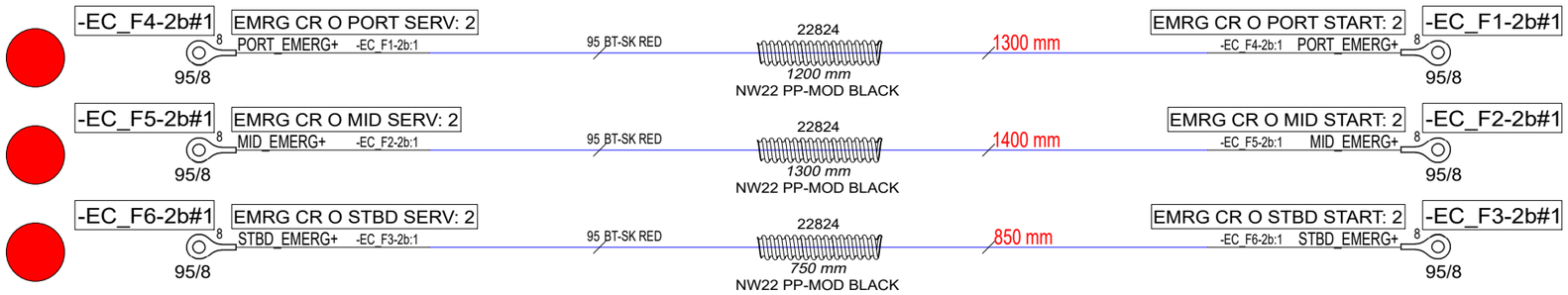

Date of modification	Modified by	Description
13.4.2023	TuM	B1: 2004274; INTRODUCED DRAWING.
9.11.2023	PF/TuM	C2: 2004890; Lenghts changed, alt. cables ->70mm2; 2005043; Tubes added.

Date	13.4.2023
Drawing by	TuM
Sheet rev.	2
Project rev.	C

Copyright by

Axopar		37076	
Boat	Sub-product code	Product code	Project ID
45	ZERO EM ESS SERVICE BT CABLE SET	HL	291/ 444
Boat model	Title	Loc	Sheet

NOTICE! CABLES WITH STICKER

FOR EXAMPLE

-G4a
SERVICE BT: +

NOTICE!
BATTERY CABLES NEED TO ADD MARKINGS
SHOWN IN EXAMPLE BELOW. PRINTED EVERY 120mm.

EXEMPTION:
ALL BLACK WIRES
THIS MARKING IS NOT NEEDED.

MARKING

R2 ISO 6722 100V AWG6 +100 C

CABLE

EXAMPLE: RED 16mm2 WIRE MARKINGS.

MARKING SHOWN ABOVE ONLY TO CABLES LISTED BELOW.

LOOK FOR EQUIVALENT AWG SIZE FOR mm2
AND ADD THIS TO CABLE MARKINGS.

FOR EXAMPLE:
CABLE SIZE IS 25mm2 --> MARKING AWG3.

EQUIVALENCY:

mm2		AWG
10 mm2	=	AWG8
16 mm2	=	AWG6
25 mm2	=	AWG3
35 mm2	=	AWG2

SERVICE CHARGER DC CABLES

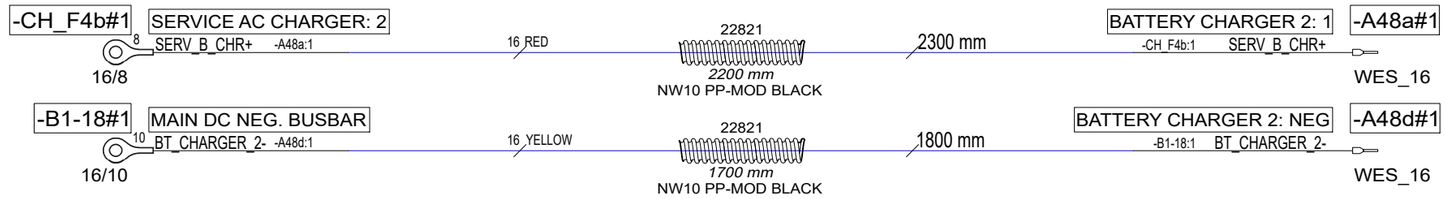

Date of modification	Modified by	Description
13.4.2023	TuM	B1: 2004274; INTRODUCED DRAWING.
9.11.2023	PF/TuM	C2: 2004890; Lenghts changed, alt. cables ->70mm2; 2005043; Tubes added.

Date 13.4.2023
Drawing by TuM
Sheet rev. 2
Project rev. C

Copyright by

NAVIX

Boat: Axopar
Boat model: 45
Sub-product code:
Product code: 37076
Project ID:
Title: ZERO EM ESS
SERVICE BT CABLE SET
Loc: HL
Sheet: 292 / 444

NOTICE! CABLES WITH STICKER

FOR EXAMPLE

-G4a
SERVICE BT: +

NOTE.
POSITIVE CABLES MUST TO BE SAME LENGTH.

NOTE.
NEGATIVE CABLES MUST TO BE SAME LENGTH.

NOTICE!
BATTERY CABLES NEED TO ADD MARKINGS
SHOWN IN EXAMPLE BELOW. PRINTED EVERY 120mm.

EXEMPTION:
ALL BLACK WIRES
THIS MARKING IS NOT NEEDED.

MARKING

RK90/115 750Vac/ 1000Vdc AWG0 GR90/115 C

CABLE

EXAMPLE: RED 50mm2 WIRE MARKINGS.

MARKING SHOWN ABOVE ONLY TO CABLES LISTED BELOW.

	EQUIVALENCY: mm2		AWG
LOOK FOR EQUIVALENT AWG SIZE FOR mm2 AND ADD THIS TO CABLE MARKINGS.	50 mm2	=	AWG0
	70 mm2	=	AWG2/0
	95 mm2	=	AWG3/0
FOR EXAMPLE: CABLE SIZE IS 70mm2 --> MARKING AWG2/0.	120 mm2	=	250 kcmil

NON ESSENTIAL SERVICE BT CABLES
(POWER PACK)

-PP_G1a#1	POWER PACK BT 1: +	POWER_P_BT_1+ -LX_A1a:F1	120/10	120 RED	22824 900 mm NW22 PP-MOD BLACK	CHECK LENGTH 1000 mm	Class-T Pwr In UNIT 1: F1 -PP_G1a:1 POWER_P_BT_1+	-LX_A1a#1	120/10
-PP_G1b#1	POWER PACK BT 1: -	POWER_P_BT_1- -LX_A1b:-	120/10	120 YELLOW	22824 7400 mm NW22 PP-MOD BLACK	CHECK LENGTH 7500 mm	Class-T Pwr In UNIT 1: - -PP_G1b:1 POWER_P_BT_1-	-LX_A1b#1	120/10
-PP_G2a#1	POWER PACK BT 2: +	POWER_P_BT_2+ -LX_A1c:F2	120/10	120 RED	22824 900 mm NW22 PP-MOD BLACK	CHECK LENGTH 1000 mm	Class-T Pwr In UNIT 1: F2 -PP_G2a:1 POWER_P_BT_2+	-LX_A1c#1	120/10
-PP_G2b#1	POWER PACK BT 2: -	POWER_P_BT_2- -LX_A1d:-	120/10	120 YELLOW	22824 7400 mm NW22 PP-MOD BLACK	CHECK LENGTH 7500 mm	Class-T Pwr In UNIT 1: - -PP_G2b:1 POWER_P_BT_2-	-LX_A1d#1	120/10
-PP_G3a#1	POWER PACK BT 3: +	POWER_P_BT_3+ -LX_A2a:F1	120/10	120 RED	22824 900 mm NW22 PP-MOD BLACK	CHECK LENGTH 1000 mm	Class-T Pwr In UNIT 2: F1 -PP_G3a:1 POWER_P_BT_3+	-LX_A2a#1	120/10
-PP_G3b#1	POWER PACK BT 3: -	POWER_P_BT_3- -LX_A2b:-	120/10	120 YELLOW	22824 7400 mm NW22 PP-MOD BLACK	CHECK LENGTH 7500 mm	Class-T Pwr In UNIT 2: - -PP_G3b:1 POWER_P_BT_3-	-LX_A2b#1	120/10

INCLUDED:

POWER B. BT 1 MAIN
-NSM_F.1#1
300A
33151

POWER B. BT 2 MAIN
-NSM_F.2#1
300A
33151

POWER B. BT 3 MAIN
-NSM_F.3#1
300A
33151

FUSES ADDED

Date of modification	Modified by	Description
13.4.2023	TuM	B1: 2004274; INTRODUCED DRAWING.
10.11.2023	PF/TuM	C2: 2004890; Cable lengths; 2005043; Tubes added.

Date 13.4.2023
Drawing by TuM
Sheet rev. 2
Project rev. C

Copyright by NAVIX

Boat: Axopar
Boat model: 45
Sub-product code:
Product code: 37077
Project ID:
Title: ZERO EM NESS POWER P BT CABLE SET
Loc: HL
Sheet: 293 / 444

NOTICE!
BATTERY CABLES NEED TO ADD MARKINGS
SHOWN IN EXAMPLE BELOW.

EXEMPTION:
ALL BLACK WIRES
THIS MARKING IS NOT NEEDED.

MARKING

BT-SK 750V AWG2 +100 C

CABLE

EXAMPLE: RED 50mm2 WIRE MARKINGS.

MARKING SHOWN ABOVE ONLY TO CABLES LISTED BELOW.

	EQUIVALENCY: mm2		AWG
LOOK FOR EQUIVALENT AWG SIZE FOR mm2 AND ADD THIS TO CABLE MARKINGS.	35 mm2	=	AWG2
	50 mm2	=	AWG0
	70 mm2	=	AWG2/0
FOR EXAMPLE:	95 mm2	=	AWG3/0
CABLE SIZE IS 70mm2 --> MARKING AWG2/0.	120 mm2	=	250 kcmil

NOTICE!
BATTERY CABLES NEED TO ADD MARKINGS
SHOWN IN EXAMPLE BELOW. PRINTED EVERY 120mm.

EXEMPTION:
ALL BLACK WIRES
THIS MARKING IS NOT NEEDED.

MARKING

R2 ISO 6722 100V AWG6 +100 C

CABLE

EXAMPLE: RED 16mm2 WIRE MARKINGS.

MARKING SHOWN ABOVE ONLY TO CABLES LISTED BELOW.

	EQUIVALENCY: mm2		AWG
LOOK FOR EQUIVALENT AWG SIZE FOR mm2 AND ADD THIS TO CABLE MARKINGS.	10 mm2	=	AWG8
	16 mm2	=	AWG6
FOR EXAMPLE:	25 mm2	=	AWG3
CABLE SIZE IS 25mm2 --> MARKING AWG3.	35 mm2	=	AWG2

NOTICE!
BATTERY CABLES NEED TO ADD MARKINGS
SHOWN IN EXAMPLE BELOW. PRINTED EVERY 120mm.

EXEMPTION:
ALL BLACK WIRES
THIS MARKING IS NOT NEEDED.

MARKING

RK90/115 750Vac/ 1000Vdc AWG0 GR90/115 C

CABLE

EXAMPLE: RED 50mm2 WIRE MARKINGS.

MARKING SHOWN ABOVE ONLY TO CABLES LISTED BELOW.

	EQUIVALENCY: mm2		AWG
LOOK FOR EQUIVALENT AWG SIZE FOR mm2 AND ADD THIS TO CABLE MARKINGS.	50 mm2	=	AWG0
	70 mm2	=	AWG2/0
FOR EXAMPLE:	95 mm2	=	AWG3/0
CABLE SIZE IS 70mm2 --> MARKING AWG2/0.	120 mm2	=	250 kcmil

NOTICE! CABLES WITH STICKER

FOR EXAMPLE

-G4a
SERVICE BT: +

INCLUDED:

-NSM_F.4#1 — NON ESS SERV MAIN — 400A — 41362

-NSM_F.6#1 — DC/DC CHARGER MAIN 1 — 100A — 298100

-NSM_F.7#1 — DC/DC CHARGER MAIN 2 — 100A — 298100

-NSM_F.8#1 — DC/DC CHARGER MAIN 3 — 100A — 298100

FUSES ADDED

WARDROBE FUSE UNIT DC SUPPLY CABLES

-NES_F1-2b#1 (8, 95/8) — W.FU. NESS MAIN - SW: 2 — NES_MAIN_1_SW+ -NES_X1-2a:1

95 BT-SK RED — 22824 — 10400 mm — NW22 PP-MOD BLACK

CHECK LENGTH 10500 mm

NES_X1: W. F.U. NES SPLY — -NES_F1-2b:1 NES_MAIN_1_SW+ — -NES_X1-2a#1 (10, 95/10)

TECHNICAL FUSE UNIT DC SUPPLY CABLES

-NES_F2-2b#1 (8, 95/8) — T.FU. NESS MAIN - SW: 2 — NES_MAIN_2_SW+ -NES_XJ2-2a:1

95 BT-SK RED — 22824 — 8400 mm — NW22 PP-MOD BLACK

CHECK LENGTH 8500 mm

T. F.U. NES JUCTION — -NES_F2-2b:1 NES_MAIN_2_SW+ — -NES_XJ2-2a#1 (10, 95/10L)

-SBP_A1b#1 — SBP DIRECT SPLY: OUT

NES_MAIN_CS+ -NES_XJ3-2a:1 (25/6)

25 RED — 22822 — 0 mm — NW13 PP-MOD BLACK

CHECK LENGTH 9000 mm

T. F.U. NES JUNCTION — -SBP_A1b:OUT NES_MAIN_CS+ — -NES_XJ3-2a#1 (10, 25/10L)

NON ESSENTIAL SERVICE SUPPLY CABLES (POWER PACK)

-LX_A5a#1 (8, 120/8) — Distributor, UNIT 2: F1 — NES_MAIN_1+ -M_S5a:1

120 RED — 22824 — 700 mm — NW22 PP-MOD BLACK

CHECK LENGTH 800 mm

NON ESS. PWR PACK MS: A — -LX_A5a:1 NES_MAIN_1+ — -M_S5a#1 (10, 120/10)

-LX_A5b#1 (8, 120/8) — Distributor, UNIT 2: - — MAIN_NEG_LINK_BMS- -B1-20:1

120 YELLOW — 22824 — 0 mm — NW22 PP-MOD BLACK

CHECK LENGTH 0 mm

MAIN DC NEG. BUSBAR — -LX_A5b:1 MAIN_NEG_LINK_BMS- — -B1-20#1 (10, 120/10)

NEW CABLE

-LX_A5d#1 (8, 120/8) — Distributor, UNIT 2: - — NESS_H_LOADS- -B3-1:1

120 YELLOW — 22824 — 0 mm — NW22 PP-MOD BLACK

CHECK LENGTH 0 mm

N ESS H LOADS NEG BUSBAR — -LX_A5d:1 NESS_H_LOADS- — -B3-1#1 (10, 120/10)

NEW CABLE

B.3 ADDED

INCLUDED:

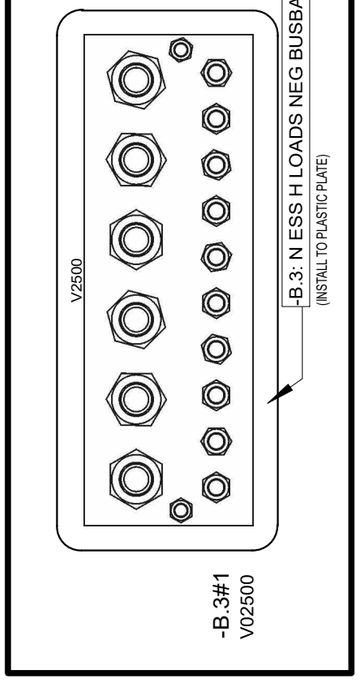

Date of modification	Modified by	Description
13.4.2023	TuM	B1: 2004274; INTRODUCED DRAWING.
10.11.2023	PF/TuM	C2: 2004890; Cable lengths; 2005043; Tubes added.

Date 13.4.2023
Drawing by TuM
Sheet rev. 2
Project rev. C

Copyright by NAVIX

Boat: Axopar
Boat model: 45
Sub-product code:
Product code: 37077
Project ID:
Title: ZERO EM NESS POWER P BT CABLE SET
Loc: HL
Sheet: 294 / 444

NOTICE!
BATTERY CABLES NEED TO ADD MARKINGS
SHOWN IN EXAMPLE BELOW.

EXEMPTION:
ALL BLACK WIRES
THIS MARKING IS NOT NEEDED.

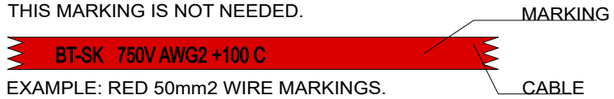

EXAMPLE: RED 50mm2 WIRE MARKINGS.

MARKING SHOWN ABOVE ONLY TO CABLES LISTED BELOW.

	EQUIVALENCY: mm2		AWG
LOOK FOR EQUIVALENT AWG SIZE FOR mm2 AND ADD THIS TO CABLE MARKINGS.	35 mm2	=	AWG2
	50 mm2	=	AWG0
	70 mm2	=	AWG2/0
FOR EXAMPLE:	95 mm2	=	AWG3/0
CABLE SIZE IS 70mm2 --> MARKING AWG2/0.	120 mm2	=	250 kcmil

NOTICE! CABLES WITH STICKER

FOR EXAMPLE

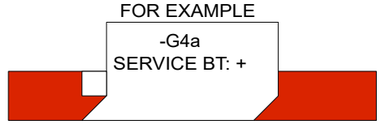

NOTICE!
BATTERY CABLES NEED TO ADD MARKINGS
SHOWN IN EXAMPLE BELOW. PRINTED EVERY 120mm.

EXEMPTION:
ALL BLACK WIRES
THIS MARKING IS NOT NEEDED.

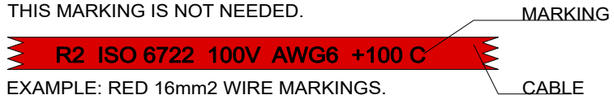

EXAMPLE: RED 16mm2 WIRE MARKINGS.

MARKING SHOWN ABOVE ONLY TO CABLES LISTED BELOW.

	EQUIVALENCY: mm2		AWG
LOOK FOR EQUIVALENT AWG SIZE FOR mm2 AND ADD THIS TO CABLE MARKINGS.	10 mm2	=	AWG8
	16 mm2	=	AWG6
FOR EXAMPLE:	25 mm2	=	AWG3
CABLE SIZE IS 25mm2 --> MARKING AWG3.	35 mm2	=	AWG2

SMART BATTERY PROTECT SUPPLY CABLES

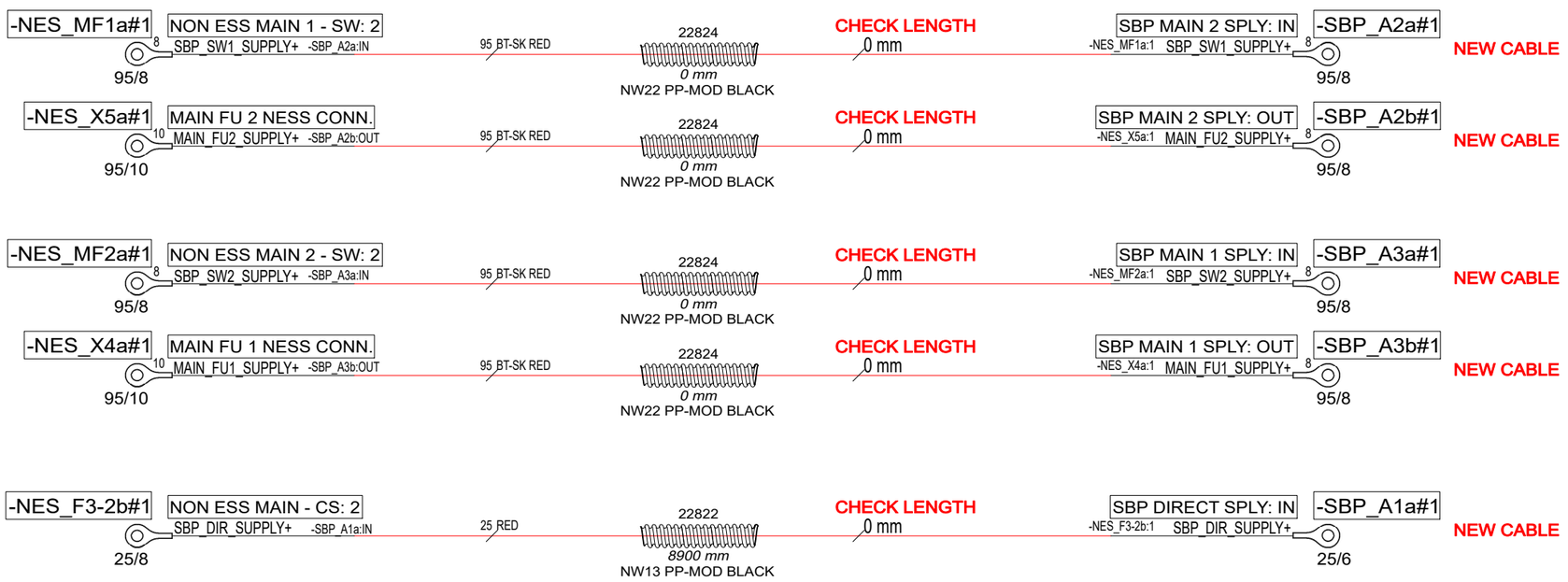

Date of modification	Modified by	Description
13.4.2023	TuM	B1: 2004274; INTRODUCED DRAWING.
10.11.2023	PF/TuM	C2: 2004890; Cable lengths; 2005043; Tubes added.

Date	14.5.2024
Drawing by	TuM
Sheet rev.	2
Project rev.	C

Copyright by

Axopar		37077	
Boat	Sub-product code	Product code	Project ID
45	ZERO EM NESS POWER P BT CABLE SET	HL	295 / 444
Boat model	Title	Loc	Sheet

NOTICE! CABLES WITH STICKER

FOR EXAMPLE

-G4a
SERVICE BT: +

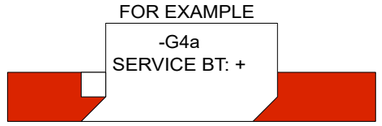

NOTICE!
BATTERY CABLES NEED TO ADD MARKINGS
SHOWN IN EXAMPLE BELOW.

EXEMPTION:
ALL BLACK WIRES
THIS MARKING IS NOT NEEDED.

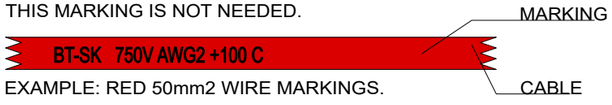

EXAMPLE: RED 50mm2 WIRE MARKINGS.

MARKING SHOWN ABOVE ONLY TO CABLES LISTED BELOW.

LOOK FOR EQUIVALENT AWG SIZE FOR mm2
AND ADD THIS TO CABLE MARKINGS.

FOR EXAMPLE:
CABLE SIZE IS 70mm2 --> MARKING AWG2/0.

EQUIVALENCY:

mm2		AWG
25 mm2	=	AWG3
35 mm2	=	AWG2
50 mm2	=	AWG0
70 mm2	=	AWG2/0
95 mm2	=	AWG3/0
120 mm2	=	250 kcmil

DC/DC CHARGER CABLES

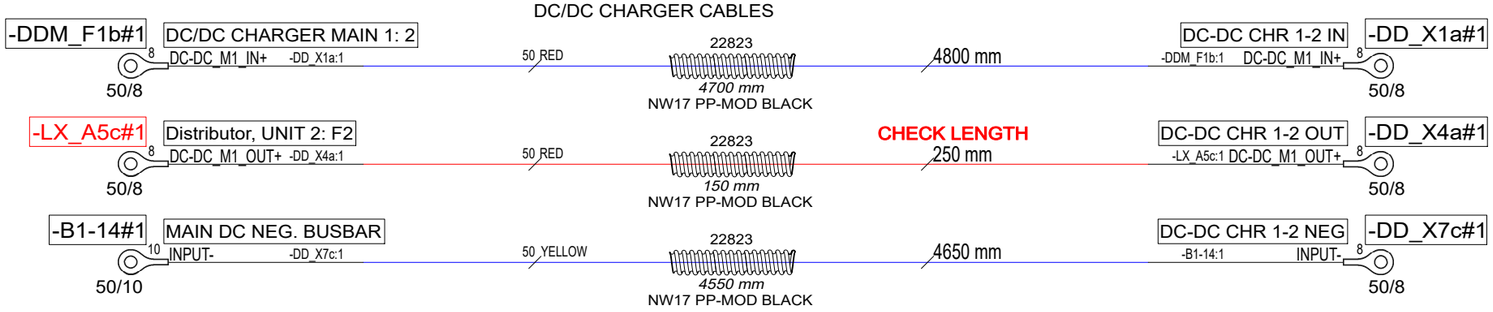

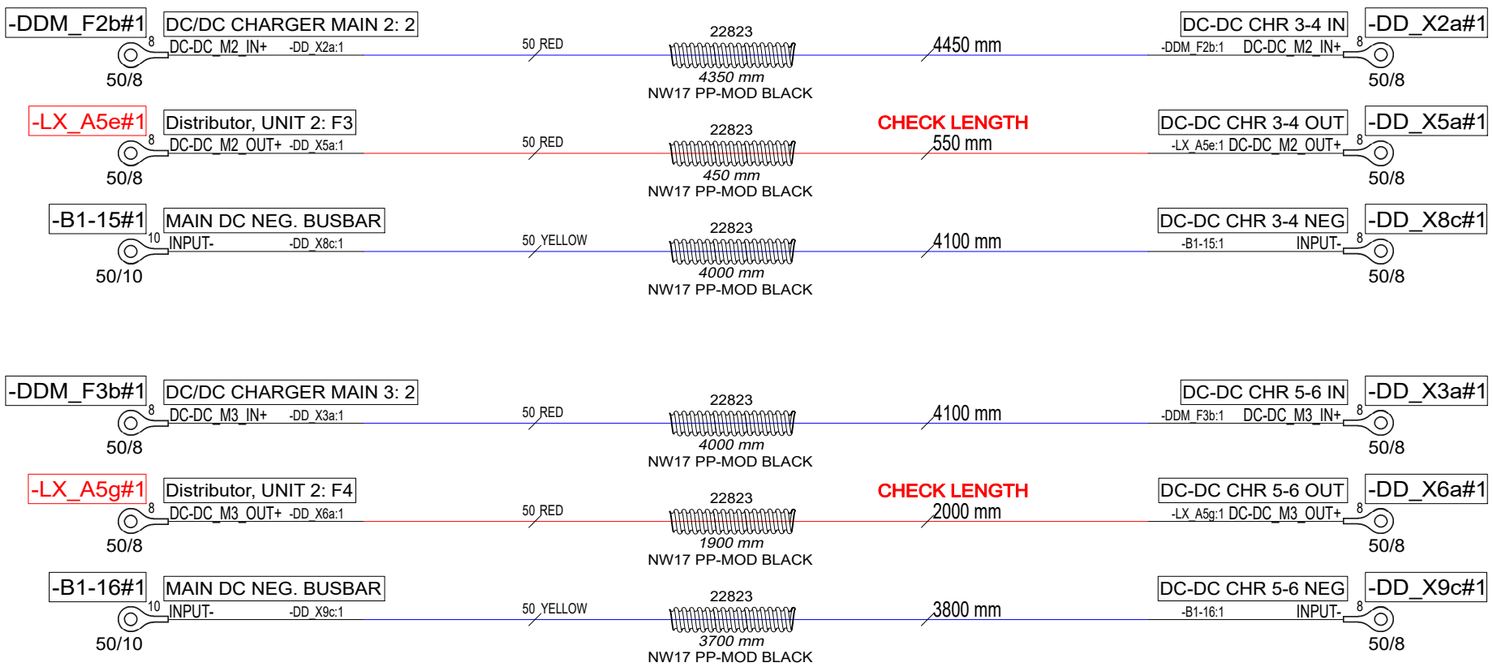

Date of modification	Modified by	Description
13.4.2023	TuM	B1: 2004274; INTRODUCED DRAWING.
10.11.2023	PF/TuM	C2: 2004890; Cable lengths; 2005043; Tubes added.

Date	13.4.2023
Drawing by	TuM
Sheet rev.	2
Project rev.	C

Copyright by NAVIX

Axopar Boat		37077 Product code	Project ID
45 Boat model	ZERO EM NESS POWER P BT CABLE SET Title	HL Loc	296 / 444 Sheet

NOTICE!
BATTERY CABLES NEED TO ADD MARKINGS
SHOWN IN EXAMPLE BELOW. PRINTED EVERY 120mm.

-2-

EXEMPTION:
ALL BLACK WIRES
THIS MARKING IS NOT NEEDED.

MARKING

R2 ISO 6722 100V AWG6 +100 C

CABLE

EXAMPLE: RED 16mm2 WIRE MARKINGS.

MARKING SHOWN ABOVE ONLY TO CABLES LISTED BELOW.

	EQUIVALENCY: mm2		AWG
LOOK FOR EQUIVALENT AWG SIZE FOR mm2 AND ADD THIS TO CABLE MARKINGS.	10 mm2	=	AWG8
	16 mm2	=	AWG6
FOR EXAMPLE: CABLE SIZE IS 25mm2 --> MARKING AWG3.	25 mm2	=	AWG3
	35 mm2	=	AWG2
	95 mm2	=	AWG3/0

NOTICE!
BATTERY CABLES NEED TO ADD MARKINGS
SHOWN IN EXAMPLE BELOW. PRINTED EVERY 120mm.

-1-

EXEMPTION:
ALL BLACK WIRES
THIS MARKING IS NOT NEEDED.

MARKING

RK90/115 750Vac/ 1000Vdc AWG0 GR90/115 C

CABLE

EXAMPLE: RED 50mm2 WIRE MARKINGS.

MARKING SHOWN ABOVE ONLY TO CABLES LISTED BELOW.

	EQUIVALENCY: mm2		AWG
LOOK FOR EQUIVALENT AWG SIZE FOR mm2 AND ADD THIS TO CABLE MARKINGS.	50 mm2	=	AWG0
	70 mm2	=	AWG2/0
FOR EXAMPLE: CABLE SIZE IS 70mm2 --> MARKING AWG2/0.	95 mm2	=	AWG3/0
	120 mm2	=	250 kcmil

INVERTER/ CHARGER 1 DC CABLES

-LX_A4a#1 — Distributor, UNIT 1: F1 — INV/CHR_1_DC_MS+ — -M_S8-2a:1 — 120/8
120 RED — 22824 — 3000 mm — NW22 PP-MOD BLACK
CHECK LENGTH — 3100 mm — -1-
INV/CHR MSU IN — -M_S8-2a#1 — -LX_A4a:F1 — INV/CHR_1_DC_MS+ — 8 — 120/8

-LX_A4c#1 — Distributor, UNIT 1: F2 — INV/CHR_1_DC_MS+ — -M_S8-2b:1 — 120/8
120 RED — 22824 — 3000 mm — NW22 PP-MOD BLACK
CHECK LENGTH — 3100 mm — -1-
INV/CHR MSU IN — -M_S8-2b#1 — -LX_A4c:F2 — INV/CHR_1_DC_MS+ — 8 — 120/8

-A63a#1 — INV/CHR 1: DC+ (BAT+) — INV/CHR_1_DC+ — -M_S8-2e:1 — 120/8
120 RED — 22824 — 900 mm — NW22 PP-MOD BLACK
1000 mm — -1-
INV/CHR MSU OUT — -M_S8-2e#1 — -A63a:BAT+ — INV/CHR_1_DC+ — 8 — 120/8

-A63b#1 — INV/CHR 1: DC+ (BAT+) — INV/CHR_1_DC+ — -M_S8-2f:1 — 120/8
120 RED — 22824 — 900 mm — NW22 PP-MOD BLACK
1000 mm — -1-
INV/CHR MSU OUT — -M_S8-2f#1 — -A63b:BAT+ — INV/CHR_1_DC+ — 8 — 120/8

-A63c#1 — INV/CHR 1: DC- (BAT-) — INV/CHR_1_DC- — -LX_A4b:- — 120/8
120 YELLOW — 22824 — 4900 mm — NW22 PP-MOD BLACK
CHECK LENGTH — 5000 mm — -1-
Distributor, UNIT 1: - — -LX_A4b#1 — -A63c:BAT- — INV/CHR_1_DC- — 10 — 120/8

-A63d#1 — INV/CHR 1: DC- (BAT-) — INV/CHR_1_DC- — -LX_A4d:- — 120/8
120 YELLOW — 22824 — 4900 mm — NW22 PP-MOD BLACK
CHECK LENGTH — 5000 mm — -1-
Distributor, UNIT 1: - — -LX_A4d#1 — -A63d:BAT- — INV/CHR_1_DC- — 10 — 120/8

-A63gnd#1 — INV/CHR 1: CASE GND — INV/CHR_1_PE — -B1-6:1 — 95/8
95_R2 95 KEVI - YELLOW/GREEN — 22824 — 4900 mm — NW22 PP-MOD BLACK
5000 mm — -2-
MAIN DC NEG. BUSBAR — -B1-6#1 — -A63gnd:PE — INV/CHR_1_PE — 10 — 95/10

INCLUDED:

-IM_F.1#1 — 41361 — 200A
-IM_F.2#1 — 41361 — 200A
-IM_F.3#1 — 41361 — 200A
-IM_F.4#1 — 41361 — 200A

NOTE.
POSITIVE CABLES MUST TO BE SAME LENGTH.

NOTE.
POSITIVE CABLES MUST TO BE SAME LENGTH.

NOTE.
NEGATIVE CABLES MUST TO BE SAME LENGTH.

NOTICE! CABLES WITH STICKER

FOR EXAMPLE

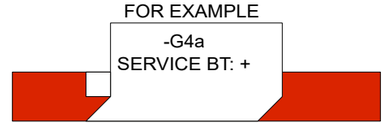

Date of modification	Modified by	Description
13.4.2023	TuM	B1: 2004274; INTRODUCED DRAWING.
10.11.2023	PF/TuM	C2: 2004890; Cable lengths; 2005043; Tubes added.

Date 13.4.2023
Drawing by TuM
Sheet rev. 2
Project rev. C

NAVIX
Copyright by

Axopar — Boat
45 — Boat model
Sub-product code
37077 — Product code
Project ID
ZERO EM NESS POWER P BT CABLE SET — Title
HL — Loc
297 / 444 — Sheet

NOTICE!
BATTERY CABLES NEED TO ADD MARKINGS
SHOWN IN EXAMPLE BELOW. PRINTED EVERY 120mm.

-2-

EXEMPTION:
ALL BLACK WIRES
THIS MARKING IS NOT NEEDED.

MARKING

R2 ISO 6722 100V AWG6 +100 C

CABLE

EXAMPLE: RED 16mm2 WIRE MARKINGS.

MARKING SHOWN ABOVE ONLY TO CABLES LISTED BELOW.

	EQUIVALENCY: mm2		AWG
LOOK FOR EQUIVALENT AWG SIZE FOR mm2 AND ADD THIS TO CABLE MARKINGS.	10 mm2	=	AWG8
	16 mm2	=	AWG6
	25 mm2	=	AWG3
FOR EXAMPLE: CABLE SIZE IS 25mm2 --> MARKING AWG3.	35 mm2 95 mm2	= =	AWG2 AWG3/0

NOTICE!
BATTERY CABLES NEED TO ADD MARKINGS
SHOWN IN EXAMPLE BELOW. PRINTED EVERY 120mm.

-1-

EXEMPTION:
ALL BLACK WIRES
THIS MARKING IS NOT NEEDED.

MARKING

RK90/115 750Vac/ 1000Vdc AWG0 GR90/115 C

CABLE

EXAMPLE: RED 50mm2 WIRE MARKINGS.

MARKING SHOWN ABOVE ONLY TO CABLES LISTED BELOW.

	EQUIVALENCY: mm2		AWG
LOOK FOR EQUIVALENT AWG SIZE FOR mm2 AND ADD THIS TO CABLE MARKINGS.	50 mm2	=	AWG0
	70 mm2	=	AWG2/0
	95 mm2	=	AWG3/0
FOR EXAMPLE: CABLE SIZE IS 70mm2 --> MARKING AWG2/0.	120 mm2	=	250 kcmil

INVERTER/ CHARGER 2 DC CABLES

-LX_A4e#1 — Distributor, UNIT 1: F3 — INV/CHR_2_DC_MS+ — -M_S8-2c:1 — 120/8
120 RED — 22824 — 4100 mm — NW22 PP-MOD BLACK
CHECK LENGTH 4200 mm -1-
INV/CHR MSU IN — -LX_A4e:F3 INV/CHR_2_DC_MS+ — -M_S8-2c#1 — 120/8

-LX_A4g#1 — Distributor, UNIT 1: F4 — INV/CHR_2_DC_MS+ — -M_S8-2d:1 — 120/8
120 RED — 22824 — 4100 mm — NW22 PP-MOD BLACK
CHECK LENGTH 4200 mm -1-
INV/CHR MSU IN — -LX_A4g:F4 INV/CHR_2_DC_MS+ — -M_S8-2d#1 — 120/8

-A64a#1 — INV/CHR 2: DC+ (BAT+) — INV/CHR_2_DC+ — -M_S8-2g:1 — 120/8
120 RED — 22824 — 900 mm — NW22 PP-MOD BLACK
1000 mm -1-
INV/CHR MSU OUT — -A64a:BAT+ INV/CHR_2_DC+ — -M_S8-2g#1 — 120/8

-A64b#1 — INV/CHR 2: DC+ (BAT+) — INV/CHR_2_DC+ — -M_S8-2h:1 — 120/8
120 RED — 22824 — 900 mm — NW22 PP-MOD BLACK
1000 mm -1-
INV/CHR MSU OUT — -A64b:BAT+ INV/CHR_2_DC+ — -M_S8-2h#1 — 120/8

-A64c#1 — INV/CHR 2: DC- (BAT-) — INV/CHR_2_DC- — -LX_A4f:- — 120/8
120 YELLOW — 22824 — 4250 mm — NW22 PP-MOD BLACK
CHECK LENGTH 4350 mm -1-
Distributor, UNIT 1: - — -A64c:BAT- INV/CHR_2_DC- — -LX_A4f#1 — 120/8

-A64d#1 — INV/CHR 2: DC- (BAT-) — INV/CHR_2_DC- — -LX_A4h:- — 120/8
120 YELLOW — 22824 — 4250 mm — NW22 PP-MOD BLACK
CHECK LENGTH 4350 mm -1-
Distributor, UNIT 1: - — -A64d:BAT- INV/CHR_2_DC- — -LX_A4h#1 — 120/8

-A64gnd#1 — INV/CHR 2: CASE GND — INV/CHR_2_PE — -B1-22:1 — 95/8
95 R2 95 KEVI - YELLOW/GREEN — 22824 — 4100 mm — NW22 PP-MOD BLACK
4200 mm -2-
MAIN DC NEG. BUSBAR — -A64gnd:PE INV/CHR_2_PE — -B1-22#1 — 95/10

NOTE.
POSITIVE CABLES MUST TO BE SAME LENGTH.

NOTE.
POSITIVE CABLES MUST TO BE SAME LENGTH.

NOTE.
NEGATIVE CABLES MUST TO BE SAME LENGTH.

NOTICE! CABLES WITH STICKER

FOR EXAMPLE

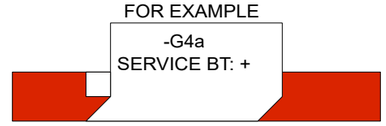

Date of modification	Modified by	Description
13.4.2023	TuM	B1: 2004274; INTRODUCED DRAWING.
10.11.2023	PF/TuM	C2: 2004890; Cable lengths; 2005043; Tubes added.

Date 13.4.2023
Drawing by TuM
Sheet rev. 2
Project rev. C

NAVIX
Copyright by

Axopar — Boat
45 — Boat model
Sub-product code
37077 — Product code
Project ID
ZERO EM NESS POWER P BT CABLE SET — Title
HL — Loc
298 / 444 — Sheet

NOTICE! CABLES WITH STICKER

FOR EXAMPLE

-G4a
SERVICE BT: +

NOTE.
POSITIVE CABLES MUST TO BE SAME LENGTH.

NOTE.
POSITIVE CABLES MUST TO BE SAME LENGTH.

NOTE.
NEGATIVE CABLES MUST TO BE SAME LENGTH.

NOTICE!
BATTERY CABLES NEED TO ADD MARKINGS
SHOWN IN EXAMPLE BELOW. PRINTED EVERY 120mm.

EXEMPTION:
ALL BLACK WIRES
THIS MARKING IS NOT NEEDED.

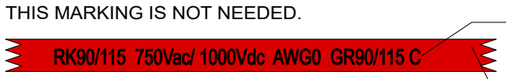

EXAMPLE: RED 50mm2 WIRE MARKINGS.

MARKING SHOWN ABOVE ONLY TO CABLES LISTED BELOW.

	EQUIVALENCY: mm2		AWG
LOOK FOR EQUIVALENT AWG SIZE FOR mm2 AND ADD THIS TO CABLE MARKINGS.	50 mm2	=	AWG0
	70 mm2	=	AWG2/0
FOR EXAMPLE: CABLE SIZE IS 70mm2 --> MARKING AWG2/0.	95 mm2	=	AWG3/0
	120 mm2	=	250 kcmil

HEAVY AUX BT SUPPLY CABLES

INSULATOR FOR BATTERY TERMINAL WITH BOLT RED

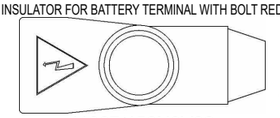

11067/456N9V02

-BHA_G.1a
227

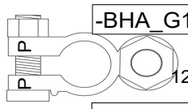

-BHA_G1a#1 — HEAVY AUX BOW BT: + — 10 BOW_HA_BT+ -BHA_F1a:1 — 120/10
120 RED — 22824 — 1600 mm — NW22 PP-MOD BLACK — 1800 mm
BOW HEAVY AUX MAIN 1: 1 -BHA_G1a:1 BOW_HA_BT+ 8 — -BHA_F1a#1 — 120/8

-BHA_G1b#1 — HEAVY AUX BOW BT: + — 10 BOW_HA_BT+ -BHA_F2a:1 — 120/10
120 RED — 22824 — 1600 mm — NW22 PP-MOD BLACK — 1800 mm
BOW HEAVY AUX MAIN 2: 1 -BHA_G1b:1 BOW_HA_BT+ 8 — -BHA_F2a#1 — 120/8

-M_S6a#1 — BOW HEAVY AUX MS: A — 10 BOW_HA_MS+ -BHA_F1b:1 — 120/10
120 RED — 22824 — 550 mm — NW22 PP-MOD BLACK — 650 mm
BOW HEAVY AUX MAIN 1: 2 -M_S6a:1 BOW_HA_MS+ 8 — -BHA_F1b#1 — 120/8

-M_S6b#1 — BOW HEAVY AUX MS: A — 10 BOW_HA_MS+ -BHA_F2b:1 — 120/10
120 RED — 22824 — 550 mm — NW22 PP-MOD BLACK — 650 mm
BOW HEAVY AUX MAIN 2: 2 -M_S6b:1 BOW_HA_MS+ 8 — -BHA_F2b#1 — 120/8

INSULATOR FOR BATTERY TERMINAL WITH BOLT BLACK

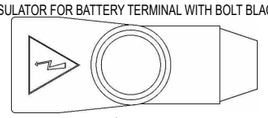

11068/456N9V14

-BHA_G.1c
228

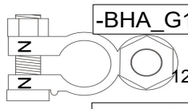

-BHA_G1c#1 — HEAVY AUX BOW BT: - — 10 BOW_HA_BT- -B2-2:1 — 120/10
120 YELLOW — 22824 — 1900 mm — NW22 PP-MOD BLACK — 2000 mm
BOW DC NEG. BUSBAR -BHA_G1c:1 BOW_HA_BT- 10 — -B2-2#1 — 120/10

-BHA_G1d#1 — HEAVY AUX BOW BT: - — 10 BOW_HA_BT- -B2-3:1 — 120/10
120 YELLOW — 22824 — 1900 mm — NW22 PP-MOD BLACK — 2000 mm
BOW DC NEG. BUSBAR -BHA_G1d:1 BOW_HA_BT- 10 — -B2-3#1 — 120/10

INCLUDED:

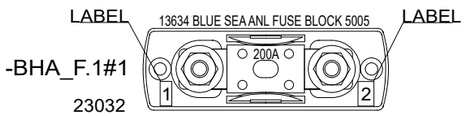

-BHA_F.1#1
23032

LABEL:
-BHA_F.1: BOW HEAVY AUX MAIN 1

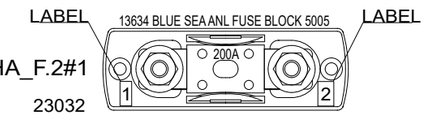

-BHA_F.2#1
23032

LABEL:
-BHA_F.2: BOW HEAVY AUX MAIN 2

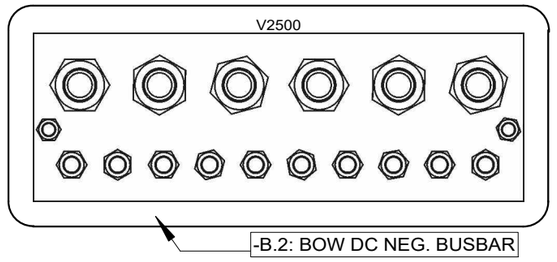

-B.2#1
V02500

-B.2: BOW DC NEG. BUSBAR
(INSTALL TO PLASTIC PLATE)

LABEL INSTRUCTIONS

NOTICE! PUT LABELS TO FUSE HOLDER BASE - NOT TO COVER.

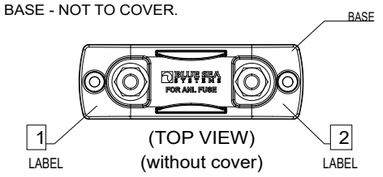

(TOP VIEW)
(without cover)

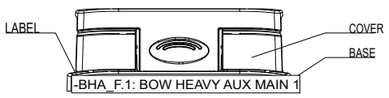

(SIDE VIEW)
(with cover)

Date of modification	Modified by	Description
14.4.2023	TuM	B1: 2004274; INTRODUCED DRAWING.
10.11.2023	PF/TuM	C2: 2004890; Cable lengths; 2005043; Tubes added.

Date 14.4.2023
Drawing by TuM
Sheet rev. 2
Project rev. C

Copyright by

NAVIX

Axopar — Boat
45 — Boat model
Sub-product code
37078 — Product code
Project ID
HEAVY AUX BOW BT CABLE SET — Title
HL — Loc
299 / 444 — Sheet

NOTICE!
BATTERY CABLES NEED TO ADD MARKINGS
SHOWN IN EXAMPLE BELOW. PRINTED EVERY 120mm.

EXEMPTION:
ALL BLACK WIRES
THIS MARKING IS NOT NEEDED.



EXAMPLE: RED 16mm2 WIRE MARKINGS.

MARKING SHOWN ABOVE ONLY TO CABLES LISTED BELOW.

	EQUIVALENCY:		
	mm2		AWG
LOOK FOR EQUIVALENT AWG SIZE FOR mm2 AND ADD THIS TO CABLE MARKINGS.	10 mm2	=	AWG8
	16 mm2	=	AWG6
	25 mm2	=	AWG3
FOR EXAMPLE: CABLE SIZE IS 25mm2 --> MARKING AWG3.	35 mm2	=	AWG2

NOTICE! CABLES WITH STICKER

FOR EXAMPLE

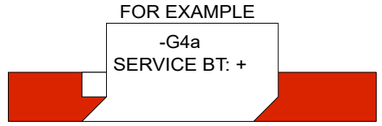

NOTICE!
BATTERY CABLES NEED TO ADD MARKINGS
SHOWN IN EXAMPLE BELOW. PRINTED EVERY 120mm.

EXEMPTION:
ALL BLACK WIRES
THIS MARKING IS NOT NEEDED.



EXAMPLE: RED 50mm2 WIRE MARKINGS.

MARKING SHOWN ABOVE ONLY TO CABLES LISTED BELOW.

	EQUIVALENCY:		
	mm2		AWG
LOOK FOR EQUIVALENT AWG SIZE FOR mm2 AND ADD THIS TO CABLE MARKINGS.	50 mm2	=	AWG0
	70 mm2	=	AWG2/0
	95 mm2	=	AWG3/0
FOR EXAMPLE: CABLE SIZE IS 70mm2 --> MARKING AWG2/0.	120 mm2	=	250 kcmil

ALTERNATOR CHR CABLES

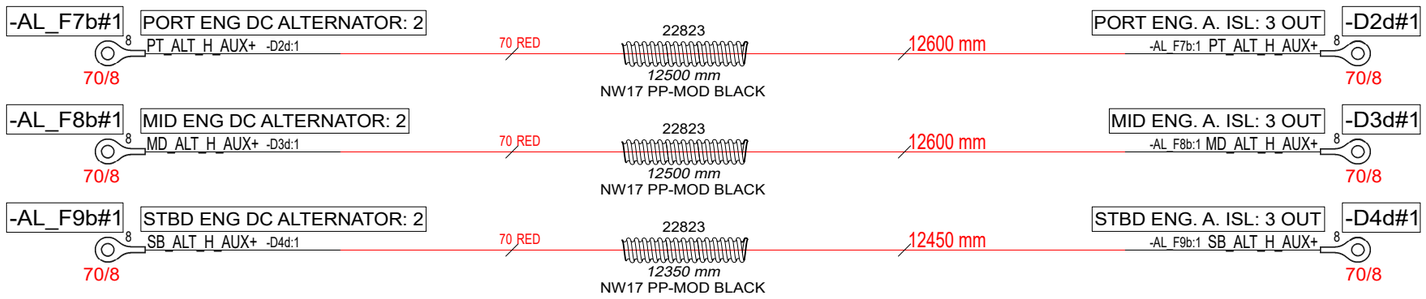

SERVICE CHARGER DC CABLE (FOR BOW HA BATTERY)

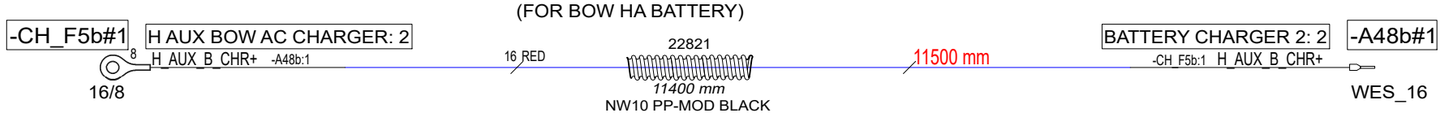

MAIN DC NEG BUSBAR - BOW DC NEG BUBAR LINK CABLE

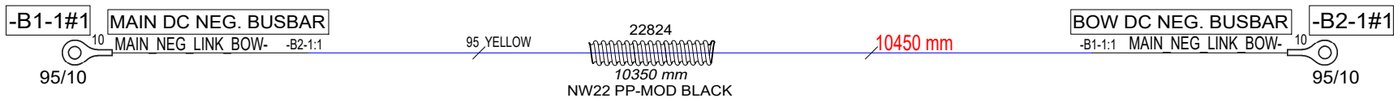

Date of modification	Modified by	Description
14.4.2023	TuM	B1: 2004274; INTRODUCED DRAWING.
10.11.2023	PF/TuM	C2: 2004890; Cable lengths; 2005043; Tubes added.

Date	14.4.2023
Drawing by	TuM
Sheet rev.	2
Project rev.	C

Copyright by NAVIX

Axopar Boat		37078 Product code	Project ID
45 Boat model	HEAVY AUX BOW BT CABLE SET Title	HL Loc	300 / 444 Sheet

NOTICE! CABLES WITH STICKER

FOR EXAMPLE

-G4a
SERVICE BT: +

NOTE.
POSITIVE CABLES MUST TO BE SAME LENGTH.

NOTE.
NEGATIVE CABLES MUST TO BE SAME LENGTH.

NOTICE!
BATTERY CABLES NEED TO ADD MARKINGS
SHOWN IN EXAMPLE BELOW. PRINTED EVERY 120mm.

EXEMPTION:
ALL BLACK WIRES
THIS MARKING IS NOT NEEDED.

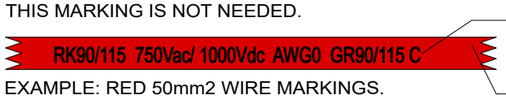

EXAMPLE: RED 50mm2 WIRE MARKINGS.

MARKING SHOWN ABOVE ONLY TO CABLES LISTED BELOW.

	EQUIVALENCY: mm2		AWG
LOOK FOR EQUIVALENT AWG SIZE FOR mm2 AND ADD THIS TO CABLE MARKINGS.	50 mm2	=	AWG0
	70 mm2	=	AWG2/0
	95 mm2	=	AWG3/0
FOR EXAMPLE: CABLE SIZE IS 70mm2 --> MARKING AWG2/0.	120 mm2	=	250 kcmil

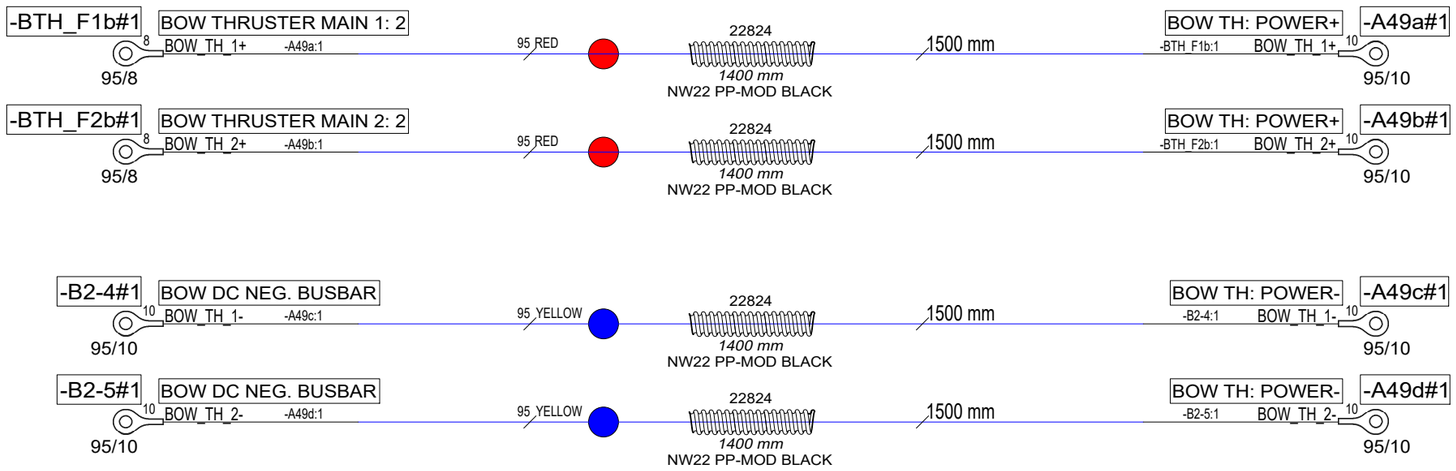

Date of modification	Modified by	Description
14.4.2023	TuM	B1: 2004274; INTRODUCED DRAWING.
18.3.2024	TuM	C2: 2005043; Tubes added.

Date 14.4.2023
Drawing by TuM
Sheet rev. 2
Project rev. C

Copyright by NAVIX

Axopar
Boat

45
Boat model

Sub-product code

37079
Product code

Project ID

BOW THRUSTER CABLES
Title

HL

Loc

301/ 444
Sheet

NOTICE!
BATTERY CABLES NEED TO ADD MARKINGS
SHOWN IN EXAMPLE BELOW. PRINTED EVERY 120mm.

EXEMPTION:
ALL BLACK WIRES
THIS MARKING IS NOT NEEDED.

MARKING

R2 ISO 6722 100V AWG6 +100 C

CABLE

EXAMPLE: RED 16mm2 WIRE MARKINGS.

MARKING SHOWN ABOVE ONLY TO CABLES LISTED BELOW.

	EQUIVALENCY:		
	mm2		AWG
LOOK FOR EQUIVALENT AWG SIZE FOR mm2 AND ADD THIS TO CABLE MARKINGS. FOR EXAMPLE: CABLE SIZE IS 25mm2 --> MARKING AWG3.	10 mm2	=	AWG8
	16 mm2	=	AWG6
	25 mm2	=	AWG3
	35 mm2	=	AWG2

NOTICE! CABLES WITH STICKER

FOR EXAMPLE

-G4a
SERVICE BT: +

NOTICE!
BATTERY CABLES NEED TO ADD MARKINGS
SHOWN IN EXAMPLE BELOW. PRINTED EVERY 120mm.

EXEMPTION:
ALL BLACK WIRES
THIS MARKING IS NOT NEEDED.

MARKING

RK90/115 750Vac/ 1000Vdc AWG0 GR90/115 C

CABLE

EXAMPLE: RED 50mm2 WIRE MARKINGS.

MARKING SHOWN ABOVE ONLY TO CABLES LISTED BELOW.

	EQUIVALENCY:		
	mm2		AWG
LOOK FOR EQUIVALENT AWG SIZE FOR mm2 AND ADD THIS TO CABLE MARKINGS. FOR EXAMPLE: CABLE SIZE IS 70mm2 --> MARKING AWG2/0.	50 mm2	=	AWG0
	70 mm2	=	AWG2/0
	95 mm2	=	AWG3/0
	120 mm2	=	250 kcmil

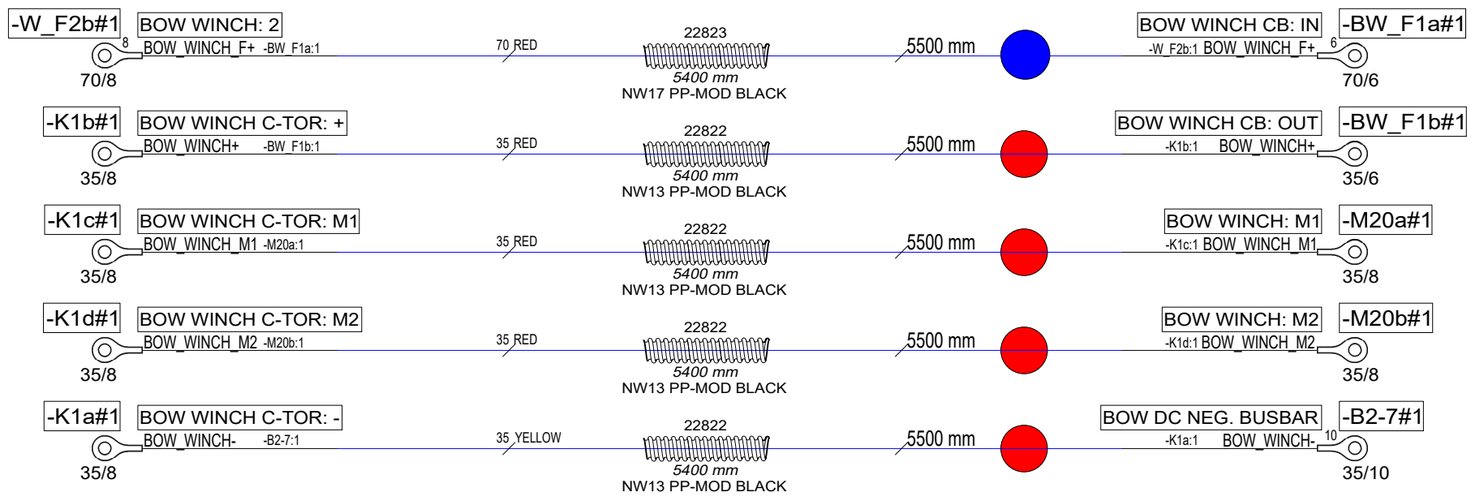

Date of modification	Modified by	Description
14.4.2023	TuM	B1: 2004274; INTRODUCED DRAWING.
18.3.2024	TuM	C2: 2005043; Tubes added.

Date	14.4.2023
Drawing by	TuM
Sheet rev.	2
Project rev.	C

Copyright by

NAVIX

Axopar Boat		37080 Product code	Project ID
45 Boat model	BOW WINCH CABLES Title	HL Loc	302 / 444 Sheet

NOTICE! CABLES WITH STICKER

FOR EXAMPLE

-G4a
SERVICE BT: +

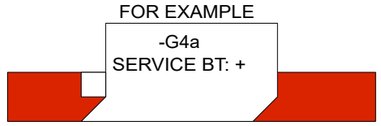

NOTICE!
BATTERY CABLES NEED TO ADD MARKINGS
SHOWN IN EXAMPLE BELOW. PRINTED EVERY 120mm.

EXEMPTION:
ALL BLACK WIRES
THIS MARKING IS NOT NEEDED.

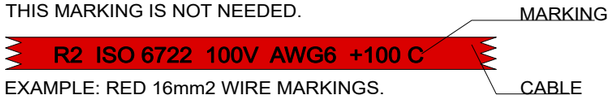

EXAMPLE: RED 16mm2 WIRE MARKINGS.

MARKING SHOWN ABOVE ONLY TO CABLES LISTED BELOW.

	EQUIVALENCY: mm2		AWG
LOOK FOR EQUIVALENT AWG SIZE FOR mm2 AND ADD THIS TO CABLE MARKINGS.	10 mm2	=	AWG8
	16 mm2	=	AWG6
	25 mm2	=	AWG3
FOR EXAMPLE: CABLE SIZE IS 25mm2 --> MARKING AWG3.	35 mm2	=	AWG2

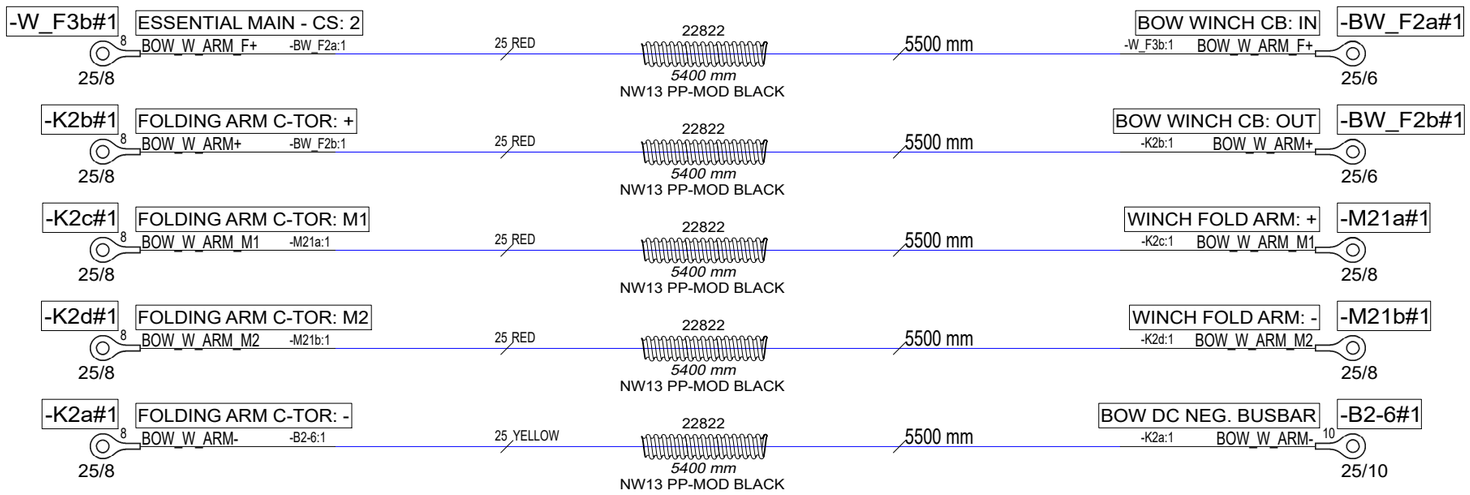

Date of modification	Modified by	Description
14.4.2023	TuM	B1: 2004274; INTRODUCED DRAWING.
18.3.2024	TuM	C2: 2005043; Tubes added.

Date	14.4.2023
Drawing by	TuM
Sheet rev.	2
Project rev.	C

Copyright by NAVIX

Axopar		37081	
Boat	Sub-product code	Product code	Project ID
45	BOW WINCH ROLLER CABLES	HL	303 / 444
Boat model	Title	Loc	Sheet

NOTICE!
BATTERY CABLES NEED TO ADD MARKINGS
SHOWN IN EXAMPLE BELOW. PRINTED EVERY 120mm.

EXEMPTION:
ALL BLACK WIRES
THIS MARKING IS NOT NEEDED.

MARKING

R2 ISO 6722 100V AWG6 +100 C

CABLE

EXAMPLE: RED 16mm2 WIRE MARKINGS.

MARKING SHOWN ABOVE ONLY TO CABLES LISTED BELOW.

	EQUIVALENCY: mm2		AWG
LOOK FOR EQUIVALENT AWG SIZE FOR mm2 AND ADD THIS TO CABLE MARKINGS.	10 mm2	=	AWG8
	16 mm2	=	AWG6
FOR EXAMPLE:	25 mm2	=	AWG3
CABLE SIZE IS 25mm2 --> MARKING AWG3.	35 mm2	=	AWG2

NOTICE! CABLES WITH STICKER

FOR EXAMPLE

-G4a
SERVICE BT: +

NOTICE!
BATTERY CABLES NEED TO ADD MARKINGS
SHOWN IN EXAMPLE BELOW. PRINTED EVERY 120mm.

EXEMPTION:
ALL BLACK WIRES
THIS MARKING IS NOT NEEDED.

MARKING

RK90/115 750Vac/ 1000Vdc AWG0 GR90/115 C

CABLE

EXAMPLE: RED 50mm2 WIRE MARKINGS.

MARKING SHOWN ABOVE ONLY TO CABLES LISTED BELOW.

	EQUIVALENCY: mm2		AWG
LOOK FOR EQUIVALENT AWG SIZE FOR mm2 AND ADD THIS TO CABLE MARKINGS.	50 mm2	=	AWG0
	70 mm2	=	AWG2/0
FOR EXAMPLE:	95 mm2	=	AWG3/0
CABLE SIZE IS 70mm2 --> MARKING AWG2/0.	120 mm2	=	250 kcmil

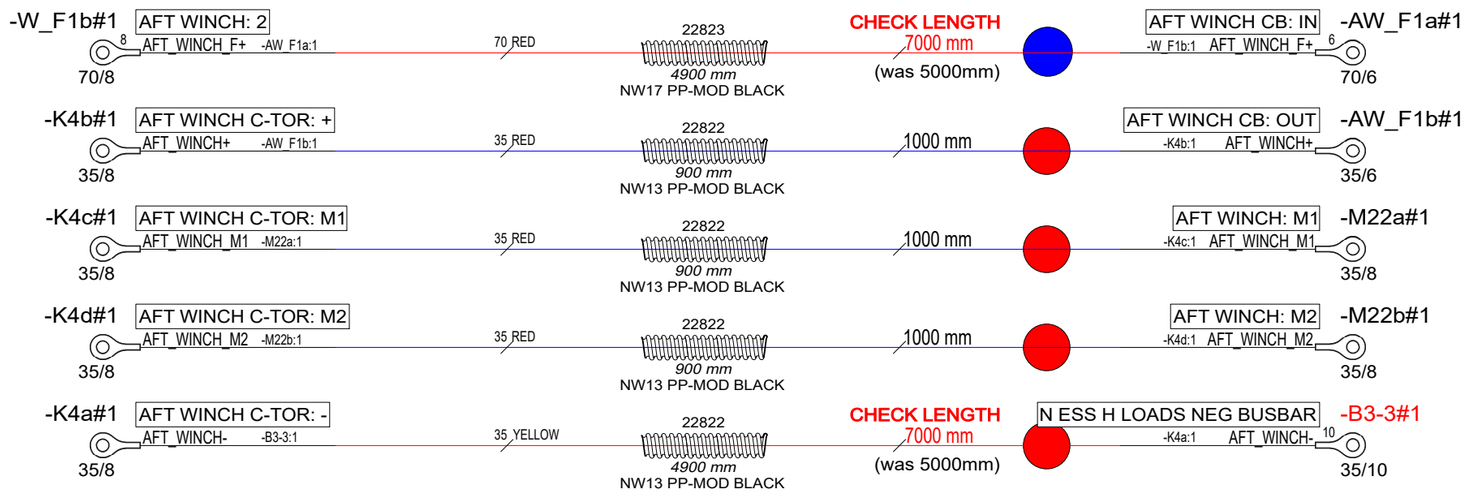

Date of modification	Modified by	Description
14.4.2023	TuM	B1: 2004274; INTRODUCED DRAWING.
18.3.2024	TuM	C2: 2005043; Tubes added.

Date	14.4.2023
Drawing by	TuM
Sheet rev.	2
Project rev.	C

Copyright by

NAVIX

Axopar (Boat)	Sub-product code	37082 (Product code)	Project ID
45 (Boat model)	AFT WINCH CABLES (Title)	HL / Loc	304 / 444 (Sheet)

NOTICE! CABLES WITH STICKER

FOR EXAMPLE

-G4a
SERVICE BT: +

INCLUDED:

-AM_F.1-1#1 IGN PROT FUSE ANL 60A
21614 — 60A — AUDIO AMPLIFIER 1

-AM_F.2-1#1 IGN PROT FUSE ANL 80A
23030 — 80A — AUDIO AMPLIFIER 2

NOTICE!
BATTERY CABLES NEED TO ADD MARKINGS
SHOWN IN EXAMPLE BELOW. PRINTED EVERY 120mm.

EXEMPTION:
ALL BLACK WIRES
THIS MARKING IS NOT NEEDED.

MARKING

R2 ISO 6722 100V AWG6 +100 C

CABLE

EXAMPLE: RED 16mm2 WIRE MARKINGS.

MARKING SHOWN ABOVE ONLY TO CABLES LISTED BELOW.

	EQUIVALENCY: mm2		AWG
LOOK FOR EQUIVALENT AWG SIZE FOR mm2 AND ADD THIS TO CABLE MARKINGS.	10 mm2	=	AWG8
	16 mm2	=	AWG6
FOR EXAMPLE:	25 mm2	=	AWG3
CABLE SIZE IS 25mm2 --> MARKING AWG3.	35 mm2	=	AWG2

PILOTHOUSE AMPLIFIER CABLES (AMPLIFIER 1)

-AM_F1-1b#1 AUDIO AMPLIFIER 1: 2
8 AUDIO_AMP_1+ -A44-1a:1
25/8
25 RED
22822
6400 mm
NW13 PP-MOD BLACK
6500 mm
PILOTHOUSE AMP: +12Vdc -A44-1a#1
-AM_F1-1b:1 AUDIO_AMP_1+
WES_25

-B3-4#1 N ESS H LOADS NEG BUSBAR
10 AUDIO_AMP_1- -A44-1b:1
25/10
25 YELLOW
22822
6900 mm
NW13 PP-MOD BLACK
7000 mm
PILOTHOUSE AMP: GND -A44-1b#1
-B3-4:1 AUDIO_AMP_1-
WES_25

OUTSIDE/CABIN AMPLIFIER CABLES (AMPLIFIER 2)

-AM_F2-1b#1 AUDIO AMPLIFIER 2: 2
8 AUDIO_AMP_2+ -A45-1a:1
25/8
25 RED
22822
6400 mm
NW13 PP-MOD BLACK
6500 mm
OUTSIDE/CABIN AMP: +12Vdc -A45-1a#1
-AM_F2-1b:1 AUDIO_AMP_2+
WES_25

-B3-6#1 N ESS H LOADS NEG BUSBAR
10 AUDIO_AMP_2- -A45-1b:1
25/10
25 YELLOW
22822
6900 mm
NW13 PP-MOD BLACK
7000 mm
OUTSIDE/CABIN AMP: GND -A45-1b#1
-B3-6:1 AUDIO_AMP_2-
WES_25

Date of modification	Modified by	Description
14.4.2023	TuM	B1: 2004274; INTRODUCED DRAWING.
18.3.2024	TuM	C2: 2005043; Tubes added.

Date 14.4.2023
Drawing by TuM
Sheet rev. 2
Project rev. C

Copyright by NAVIX

Boat: Axopar
Boat model: 45
Sub-product code:
Product code: 37083
Project ID:
Title: BASIC AUDIO SYSTEM AMPL CABLES
HL:
Loc:
Sheet: 305 / 444

NOTICE! CABLES WITH STICKER

FOR EXAMPLE

-G4a
SERVICE BT: +

INCLUDED:

-AM_F.1-2#1 20009	IGN PROT FUSE ANL 50A 50A	AUDIO AMPLIFIER 1
-AM_F.2-2#1 20009	IGN PROT FUSE ANL 50A 50A	AUDIO AMPLIFIER 2
-AM_F.3-2#1 20009	IGN PROT FUSE ANL 50A 50A	AUDIO AMPLIFIER 3

NOTICE!
BATTERY CABLES NEED TO ADD MARKINGS
SHOWN IN EXAMPLE BELOW. PRINTED EVERY 120mm.

EXEMPTION:
ALL BLACK WIRES
THIS MARKING IS NOT NEEDED.

MARKING

R2 ISO 6722 100V AWG6 +100 C

CABLE

EXAMPLE: RED 16mm2 WIRE MARKINGS.

MARKING SHOWN ABOVE ONLY TO CABLES LISTED BELOW.

LOOK FOR EQUIVALENT AWG SIZE FOR mm2
AND ADD THIS TO CABLE MARKINGS.

FOR EXAMPLE:
CABLE SIZE IS 25mm2 --> MARKING AWG3.

EQUIVALENCY:

mm2		AWG
10 mm2	=	AWG8
16 mm2	=	AWG6
25 mm2	=	AWG3
35 mm2	=	AWG2

PILOTHOUSE AMPLIFIER CABLES (AMPLIFIER 1)

-AM_F1-2b#1 — AUDIO AMPLIFIER 1: 2
8 — AUDIO_AMP_1_F+ -A44-2a:1
25/8
25 RED — 22822 — 6400 mm — NW13 PP-MOD BLACK
6500 mm
PILOTHOUSE AMP: +12Vdc — -AM_F1-2b:1 AUDIO_AMP_1_F+ — -A44-2a#1
WES_25

-B3-5#1 — N ESS H LOADS NEG BUSBAR
10 — AUDIO_AMP_1- -A44-2b:1
25/10
25 YELLOW — 22822 — 6900 mm — NW13 PP-MOD BLACK
7000 mm
PILOTHOUSE AMP: GND — -B3-5:1 AUDIO_AMP_1- — -A44-2b#1
WES_25

CABIN AMPLIFIER CABLES (AMPLIFIER 2)

-AM_F2-2b#1 — AUDIO AMPLIFIER 2: 2
8 — AUDIO_AMP_2+ -A45-2a:1
25/8
25 RED — 22822 — 6400 mm — NW13 PP-MOD BLACK
6500 mm
CABIN AMP: +12Vdc — -AM_F2-2b:1 AUDIO_AMP_2+ — -A45-2a#1
WES_25

-B3-7#1 — N ESS H LOADS NEG BUSBAR
10 — AUDIO_AMP_2- -A45-2b:1
25/10
25 YELLOW — 22822 — 6900 mm — NW13 PP-MOD BLACK
7000 mm
CABIN AMP: GND — -B3-7:1 AUDIO_AMP_2- — -A45-2b#1
WES_25

OUTSIDE AMPLIFIER CABLES (AMPLIFIER 3)

-AM_F3-2b#1 — AUDIO AMPLIFIER 3: 2
8 — AUDIO_AMP_3+ -A46-2a:1
25/8
25 RED — 22822 — 6400 mm — NW13 PP-MOD BLACK
6500 mm
OUTSIDE AMP: +12Vdc — -AM_F3-2b:1 AUDIO_AMP_3+ — -A46-2a#1
WES_25

-B3-8#1 — N ESS H LOADS NEG BUSBAR
10 — AUDIO_AMP_3- -A46-2b:1
25/10
25 YELLOW — 22822 — 6900 mm — NW13 PP-MOD BLACK
7000 mm
OUTSIDE AMP: GND — -B3-8:1 AUDIO_AMP_3- — -A46-2b#1
WES_25

Date of modification	Modified by	Description
14.4.2023	TuM	B1: 2004274; INTRODUCED DRAWING.
18.3.2024	TuM	C2: 2005043; Tubes added.

Date 14.4.2023
Drawing by TuM
Sheet rev. 2
Project rev. C

Copyright by NAVIX

Boat: Axopar
Boat model: 45
Sub-product code:
Product code: 37084
Project ID:
Title: ADVANCED AUDIO SYSTEM AMPL CABLES
Loc: HL
Sheet: 306 / 444

GENERAL LAYOUT

37085 Axopar 45 STANDARD 230VAC SYSTEM - EU
COMPLETE SYSTEM, WITH STD AND OPTIONS.

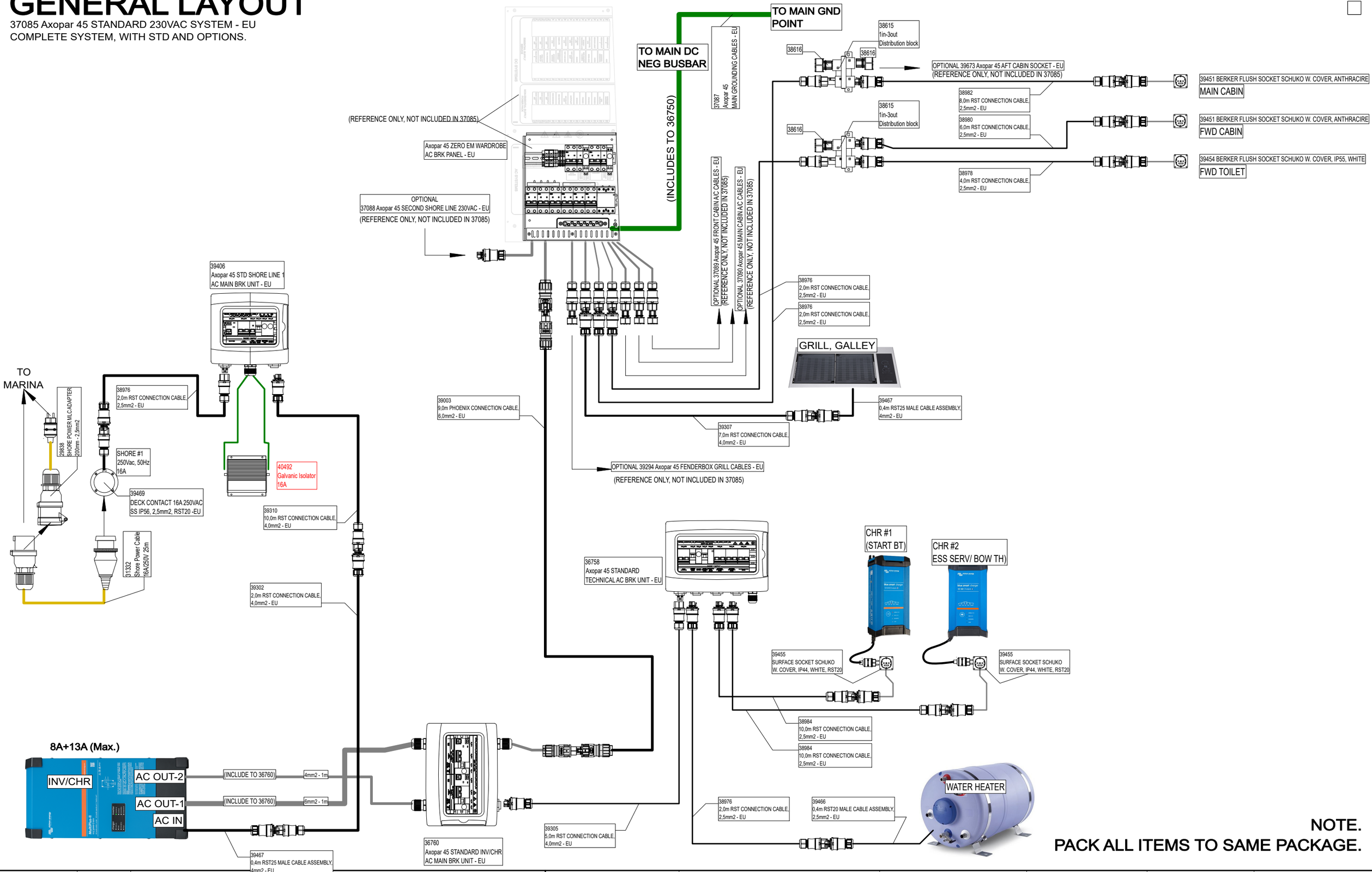

NOTE.
PACK ALL ITEMS TO SAME PACKAGE.

Date of modification	Modified by	Description
6.4.2023	TuM	A1: 2004274; INTRODUCED DRAWING.
18.9.2023	TuM	B2: 2004274; STRUCTURE ADDED.
28.5.2024	TuM	C3: 2005065; GAL. ISOL. CHANGED 30A->16A.

Date	6.4.2023
Drawing by	TuM
Sheet rev.	3
Project rev.	C

NAVIX
Copyright by

Axopar		37085	
Boat	Sub-product code	Product code	Project ID
45	STANDARD 230VAC SYSTEM - EU	HL	307 / 444
Boat model	Title	Loc	Sheet

GENERAL LAYOUT

37086 Axopar 45 ZERO EMISSION 230VAC SYSTEM - EU

TO MAIN GND POINT

TO MAIN DC NEG BUSBAR

(INCLUDES TO 36415)

37087 Axopar 45 MAIN GROUNDING CABLES - EU

(REFERENCE ONLY, NOT INCLUDED IN 37086)

Axopar 45 ZERO EM WARDROBE AC BRK PANEL - EU

OPTIONAL 37088 Axopar 45 SECOND SHORE LINE 230VAC - EU (REFERENCE ONLY, NOT INCLUDED IN 37086)

38615 1in-3out Distribution block

38616

OPTIONAL 39673 Axopar 45 AFT CABIN SOCKET - EU (REFERENCE ONLY, NOT INCLUDED IN 37086)

38982 8,0m RST CONNECTION CABLE, 2,5mm2 - EU

38980 6,0m RST CONNECTION CABLE, 2,5mm2 - EU

38978 4,0m RST CONNECTION CABLE, 2,5mm2 - EU

39451 BERKER FLUSH SOCKET SCHUKO W. COVER, ANTHRACIRE MAIN CABIN

39451 BERKER FLUSH SOCKET SCHUKO W. COVER, ANTHRACIRE FWD CABIN

39454 BERKER FLUSH SOCKET SCHUKO W. COVER, IP55, WHITE FWD TOILET

OPTIONAL 37089 Axopar 45 FRONT CABIN AC CABLES - EU (REFERENCE ONLY, NOT INCLUDED IN 37086)

OPTIONAL 37090 Axopar 45 MAIN CABIN AC CABLES - EU (REFERENCE ONLY, NOT INCLUDED IN 37086)

38976 2,0m RST CONNECTION CABLE, 2,5mm2 - EU

38976 2,0m RST CONNECTION CABLE, 2,5mm2 - EU

GRILL, GALLEY

39467 0,4m RST25 MALE CABLE ASSEMBLY, 4mm2 - EU

39307 7,0m RST CONNECTION CABLE, 4,0mm2 - EU

OPTIONAL 39294 Axopar 45 FENDERBOX GRILL CABLES - EU (REFERENCE ONLY, NOT INCLUDED IN 37086)

39408 Axopar 45 ZERO EM SHORE LINE 1 AC MAIN BRK UNIT - EU

TO MARINA

29838 SHORE POWER MLC ADAPTER 200mm - 2,5mm2

38976 2,0m RST CONNECTION CABLE, 2,5mm2 - EU

SHORE #1 250Vac, 50Hz 16A

39469 DECK CONTACT 16A 250VAC SS IP56, 2,5mm2, RST20 -EU

51332 Shore Power Cable 16A/250V 25m

40492 Galvanic Isolator 16A

39309 9,0m RST CONNECTION CABLE, 4,0mm2 - EU

39309 9,0m RST CONNECTION CABLE, 4,0mm2 - EU

39310 10,0m RST CONNECTION CABLE, 4,0mm2 - EU

39310 10,0m RST CONNECTION CABLE, 4,0mm2 - EU

39301 1,0m RST CONNECTION CABLE, 4,0mm2 - EU

39302 2,0m RST CONNECTION CABLE, 4,0mm2 - EU

39291 Axopar 45 ZERO EM INV/CHR AC OUT 2 BRK UNIT - EU

8A+13A (Max.)

INV/CHR #2

AC OUT-2 (INCLUDE TO 39291) 4mm2 - 1m

AC OUT-1 (INCLUDE TO 39290)

AC IN (INCLUDE TO 39291) 4mm2 - 1m

39467 0,4m RST25 MALE CABLE ASSEMBLY, 4mm2 - EU

8A+13A (Max.)

INV/CHR #1

AC OUT-2 10mm2 - 1m

AC OUT-1 (INCLUDE TO 39290) 10mm2 - 1m

AC IN

39467 0,4m RST25 MALE CABLE ASSEMBLY, 4mm2 - EU

39305 5,0m RST CONNECTION CABLE, 4,0mm2 - EU

39290 Axopar 45 ZERO EM INV/CHR AC OUT 1 BRK UNIT - EU

36430 Axopar 45 ZERO EM TECHNICAL AC BRK UNIT - EU

CHR #1 (START BT)

CHR #2 ESS SERV/ BOW TH)

39455 SURFACE SOCKET SCHUKO W. COVER, IP44, WHITE, RST20

39455 SURFACE SOCKET SCHUKO W. COVER, IP44, WHITE, RST20

38984 10,0m RST CONNECTION CABLE, 2,5mm2 - EU

38984 10,0m RST CONNECTION CABLE, 2,5mm2 - EU

38976 2,0m RST CONNECTION CABLE, 2,5mm2 - EU

39466 0,4m RST20 MALE CABLE ASSEMBLY, 2,5mm2 - EU

WATER HEATER

NOTE.
PACK ALL ITEMS TO SAME PACKAGE.

Date of modification	Modified by	Description
6.4.2023	TuM	A1: 2004274; INTRODUCED DRAWING.
12.9.2023	TuM	B2: 2004274; SYSTEM STRUCTURE ADDED.
28.5.2024	TuM	C3: 2005065: Galvanic isolator changed 30A -->16A

Date	6.4.2023
Drawing by	
Sheet rev.	3
Project rev.	C

NAVIX

Copyright by

Axopar		37086	
Boat	Sub-product code	Product code	Project ID
45	ZERO EMISSION 230VAC SYSTEM - EU	HL	308 / 444
Boat model	Title	Loc	Sheet

NOTICE! CABLES WITH STICKER

FOR EXAMPLE

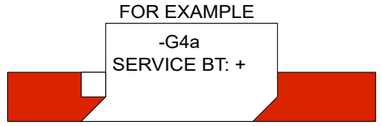

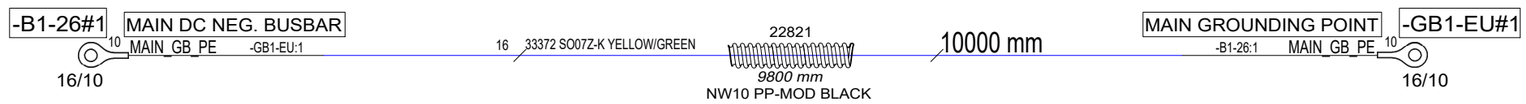

Date of modification	Modified by	Description
12.9.2023	TuM	B1: 2004274; INTRODUCED DRAWING.
30.5.2024	TuM	C1: 2005065; NOT MODIFIED.

Date	12.9.2023
Drawing by	TuM
Sheet rev.	1
Project rev.	C

Copyright by

Axopar Boat		37087 Product code	Project ID
45 Boat model	MAIN GROUNDING CABLES - EU Title	HL Loc	309 / 444 Sheet

GENERAL LAYOUT

37088 Axopar 45 ZERO EM SECOND SHORE LINE 230VAC - EU

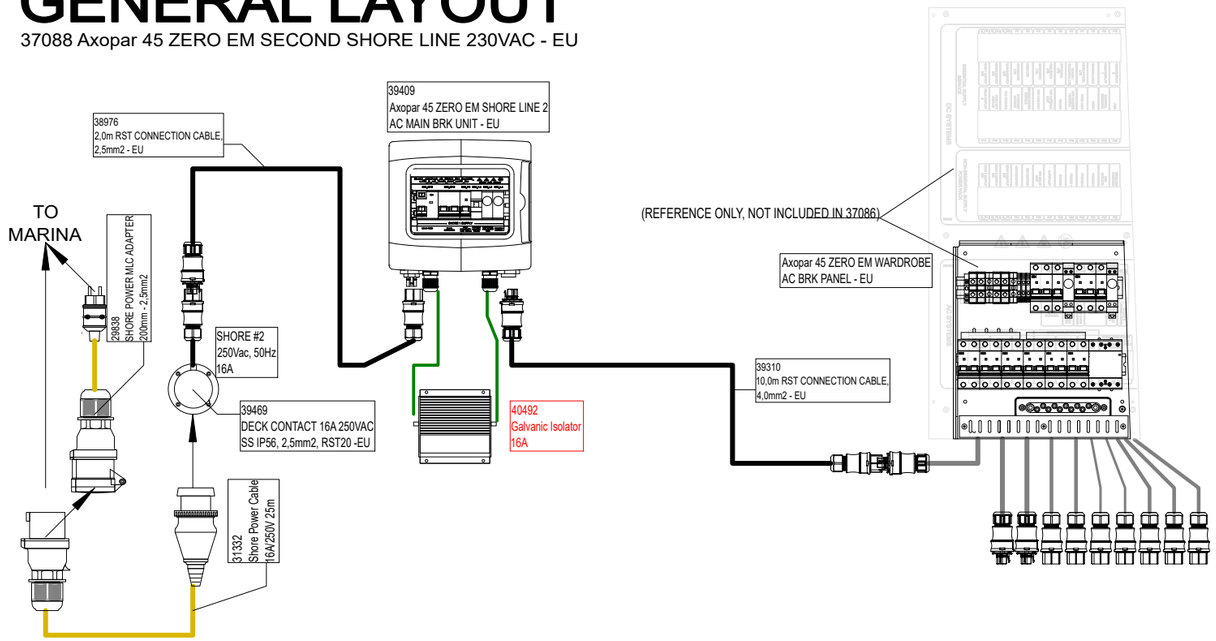

NOTE.
PACK ALL ITEMS TO SAME PACKAGE.

Date of modification	Modified by	Description
12.9.2023	TuM	B1: 2004274; INTRODUCED DRAWING.
28.5.2024	TuM	C2: 2005065: Galvanic isolator changed 30A -->16A.

Date	12.9.2023
Drawing by	TuM
Sheet rev.	2
Project rev.	C

Copyright by NAVIX

Boat	Sub-product code	Product code	Project ID
Axopar		37088	
Boat model	**Title**	**Loc**	**Sheet**
45	ZERO EM SECOND SHORE LINE 230VAC - EU	HL	310 / 444

GENERAL LAYOUT

37089 Axopar 45 FRONT CABIN A/C CABLES - EU

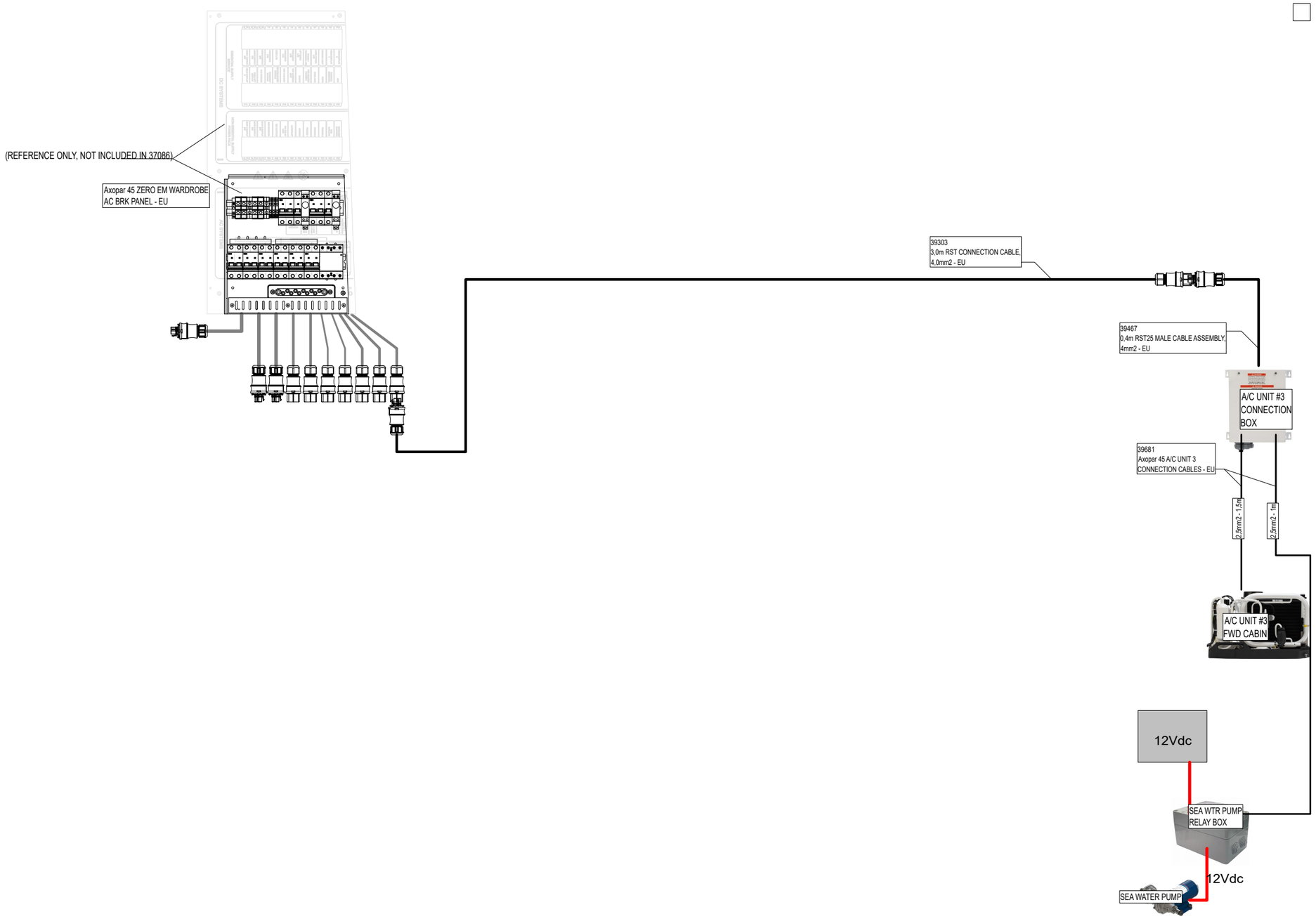

NOTE.
PACK ALL ITEMS TO SAME PACKAGE.

12.9.2023	TuM	B1: 2004274; INTRODUCED DRAWING.	Date 12.9.2023	NAVIX	Axopar		37089	
30.5.2024	TuM	C1: 2005065; NOT MODIFIED.	Drawing by TuM		Boat	Sub-product code	Product code	Project ID
			Sheet rev. 1		45	FRONT CABIN A/C CABLES - EU	HL	311/ 444
Date of modification	Modified by	Description	Project rev. C	Copyright by	Boat model	Title	Loc	Sheet

GENERAL LAYOUT

37090 Axopar 45 MAIN CABIN A/C CABLES - EU

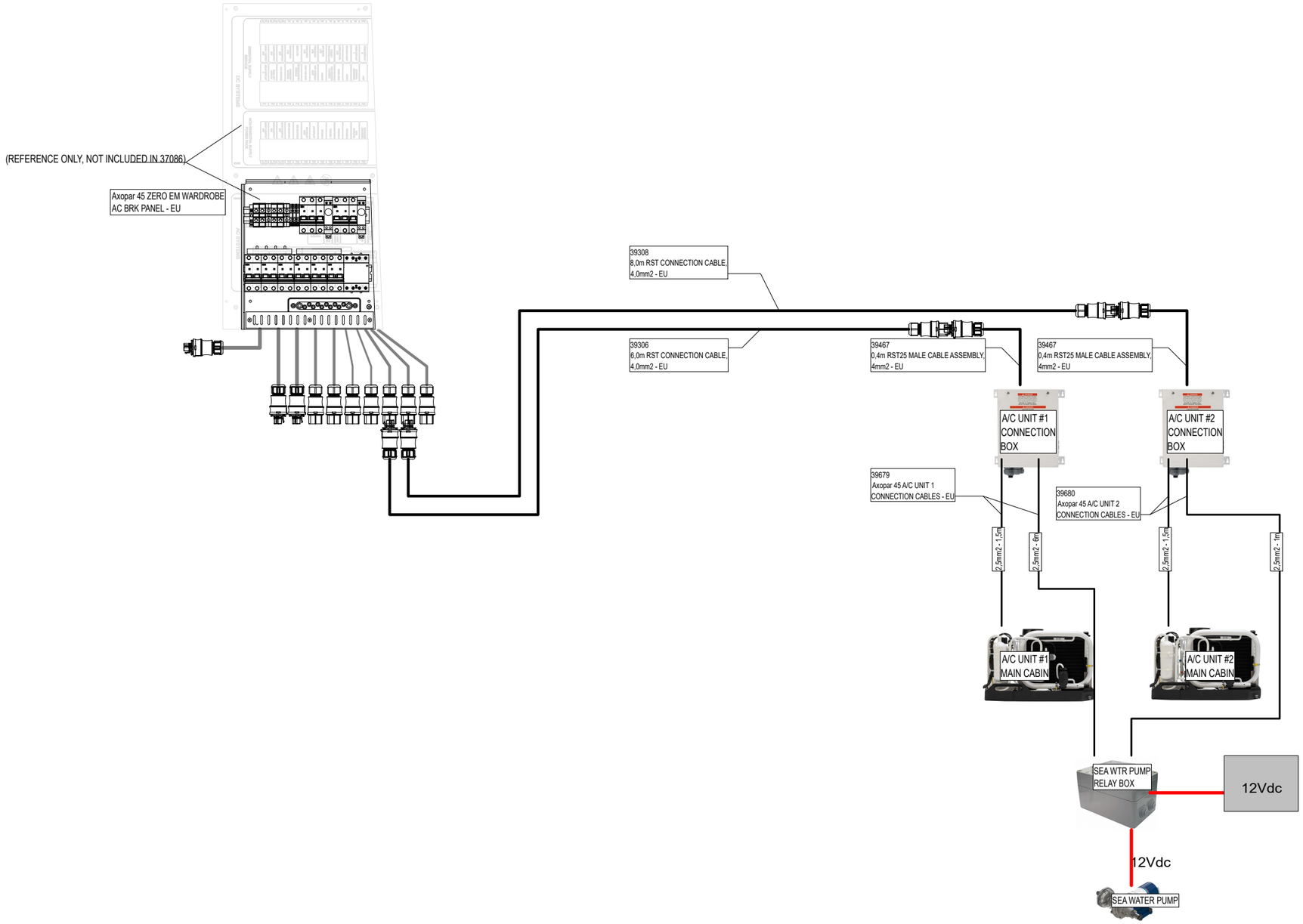

NOTE.
PACK ALL ITEMS TO SAME PACKAGE.

12.9.2023	TuM	B1: 2004274; INTRODUCED DRAWING.	Date 12.9.2023	NAVIX	Axopar		37090	
30.5.2024	TuM	C1: 2005065; NOT MODIFIED.	Drawing by TuM		Boat	Sub-product code	Product code	Project ID
			Sheet rev. 1		45	MAIN CABIN A/C CABLES - EU	HL	312 / 444
Date of modification	Modified by	Description	Project rev. C	Copyright by	Boat model	Title	Loc	Sheet

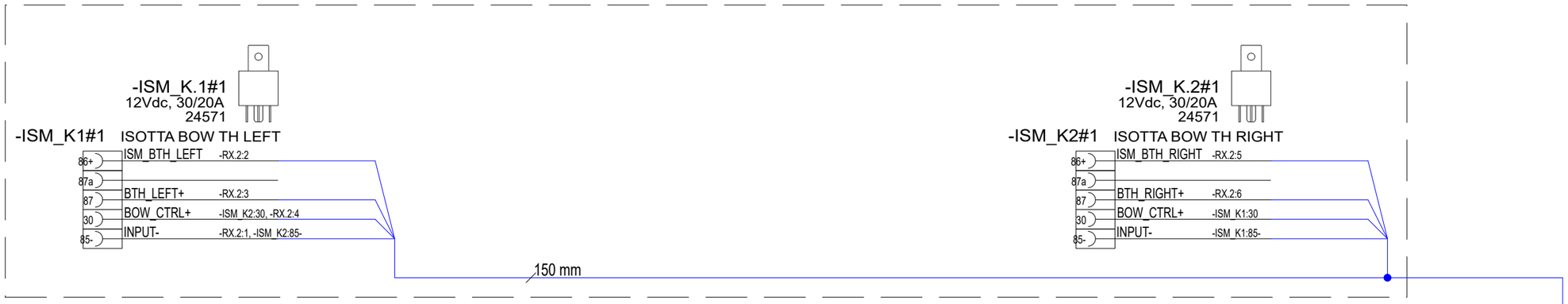

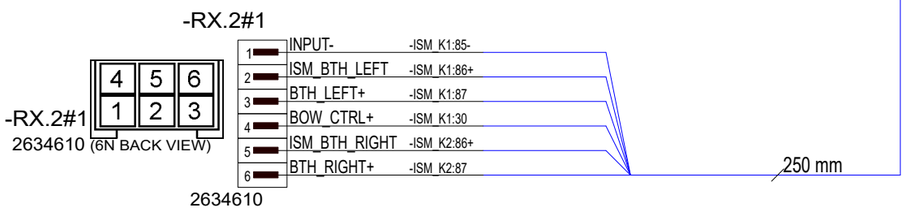

PIN ORDER

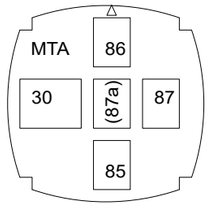

SECONDARY LOCK
SEEN FROM WIRING SIDE
(BACK VIEW)

INSTRUCTIONS FOR ATTACHING CABLES/ RELAYS TO RELAY HOLDER:

1. PULL SECONDARY LOCK OUT OF RELAY HOLDER APPROX 1cm WITH TOOL IF NEEDED (DO NOT PULL COMPLETELY OUT)
2. MOUNT WIRES
3. PUSH SECONDARY LOCK BACK IN
4. MOUNT RELAY TO RELAY HOLDER

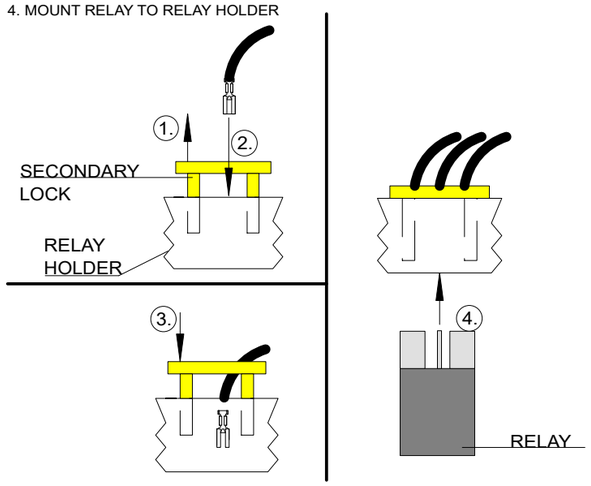

MTA RELAY HOLDER
ASSEMBLY/ LABEL INSTRUCTIONS

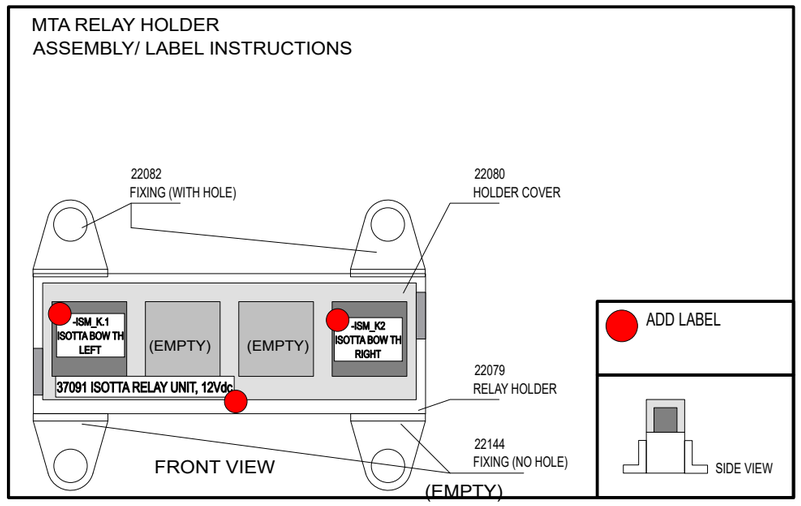

NOTICE!
VERIFY THAT ALL CABLES HAVE MARKINGS SHOWN IN EXAMPLE BELOW.

EXEMPTION:
ALL <500mm WIRES AND BLACK WIRES THIS MARKING IS NOT NEEDED.



EXAMPLE: RED 1,5mm2 WIRE MARKINGS.

Date of modification	Modified by	Description
7.7.2022	TuM	A1: 2003713; INTRODUCED DRAWING.
3.5.2023	VR	B2: 2004274; REDUCED NUMBER OF RELAYS
30.5.2024	TuM	C2: 2005065; NOT MODIFIED.

Date	7.7.2022
Drawing by	TuM
Sheet rev.	2
Project rev.	C

NAVIX
Copyright by

Axopar Boat		37091 Product code	Project ID
45 Boat model	ISOTTA RELAY UNIT Title	HL Loc	313 / 444 Sheet

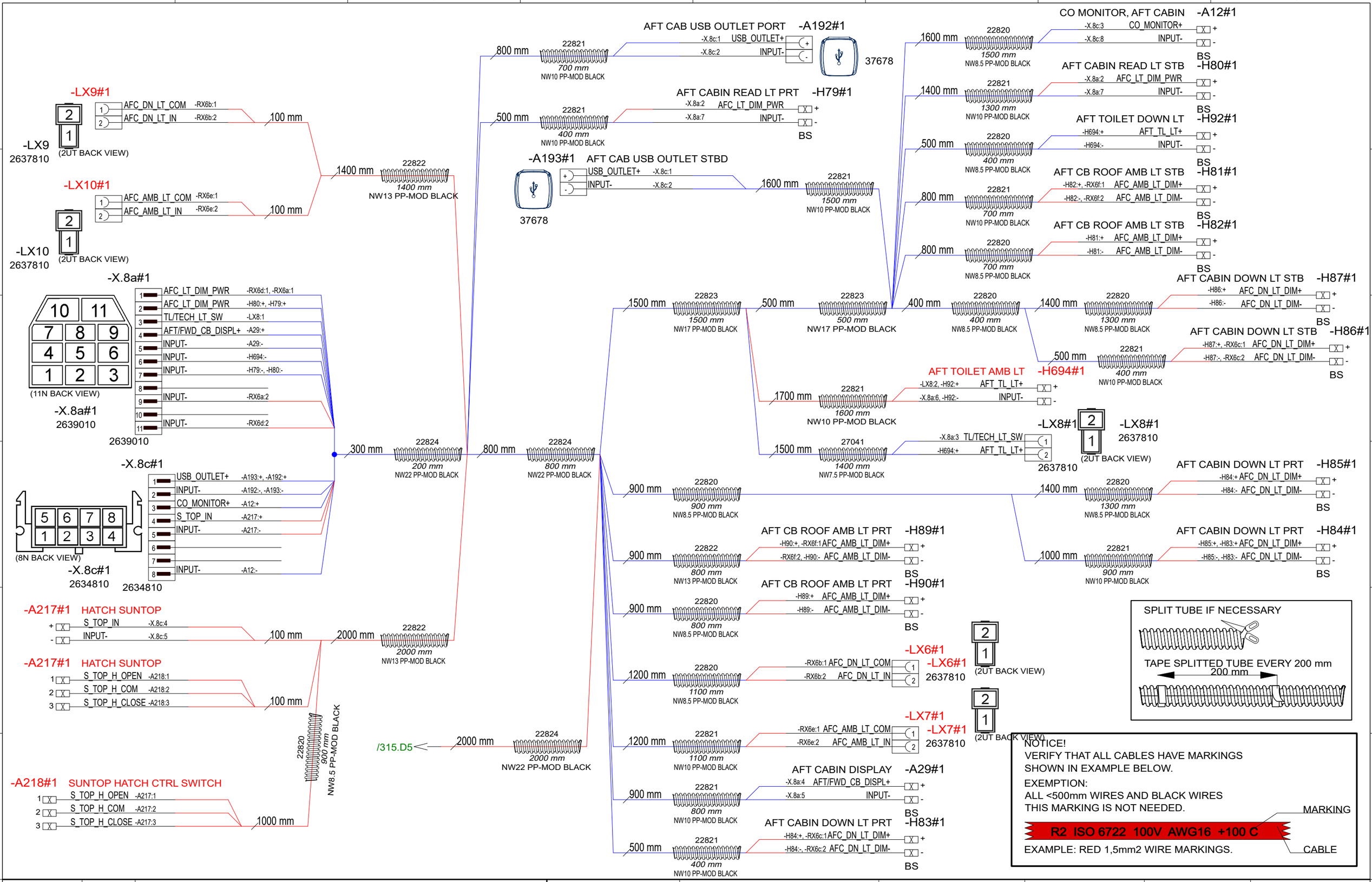

4.5.2023	RK	B1: 2004274; INTRODUCED DRAWING	Date 4.5.2023	NAVIX	Axopar		38348
5.3.2024	PF/TuM	C2: 2004890; X.8 moved, added suntop actuator, removed speaker cables. 2005043; Tubing added.	Drawing by TuM		Boat	Sub-product code	Product code / Project ID
			Sheet rev. 2		45	AFT CABIN ROOF LINER HARNESS	HL / Loc
Date of modification	Modified by	Description	Project rev. C	Copyright by	Boat model	Title	314 / 444 Sheet

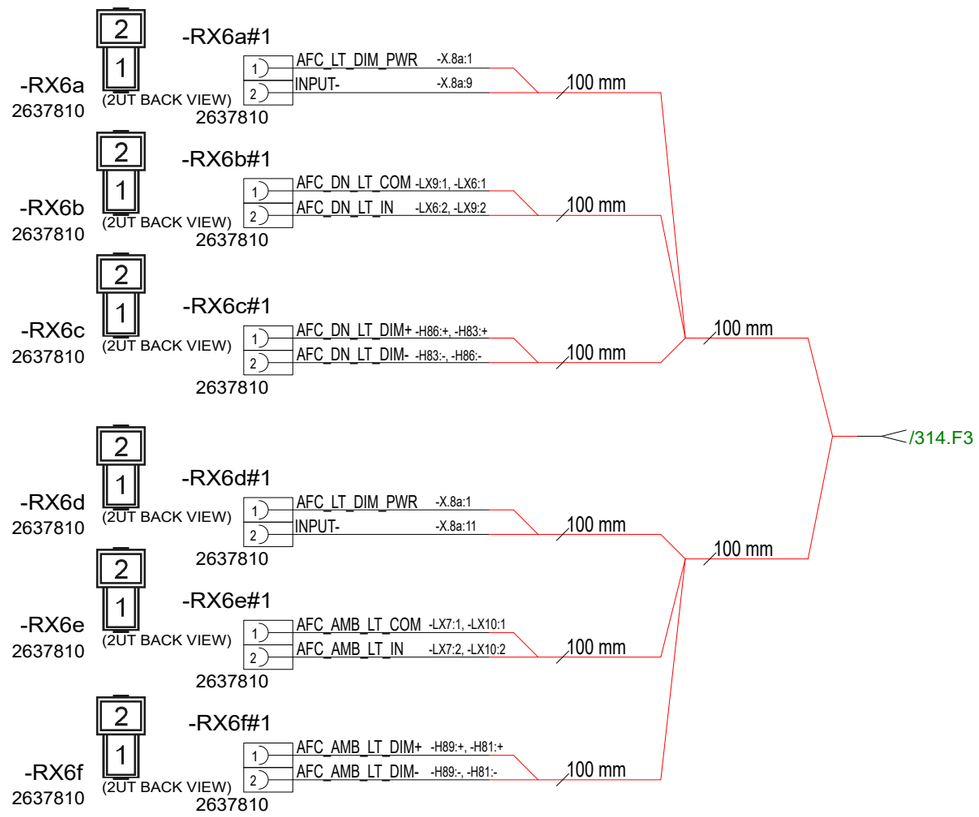

Date of modification	Modified by	Description
4.5.2023	RK	B1: 2004274; INTRODUCED DRAWING
8.11.2023	PF/TuM	C2: 2004890; X.8 moved, added suntop actuator. 2005043; Tubing added.

Date	4.5.2023
Drawing by	TuM
Sheet rev.	2
Project rev.	C

Copyright by

Axopar Boat		38348 Product code	Project ID
45 Boat model	AFT CABIN ROOF LINER HARNESS Title	HL Loc	315 / 444 Sheet

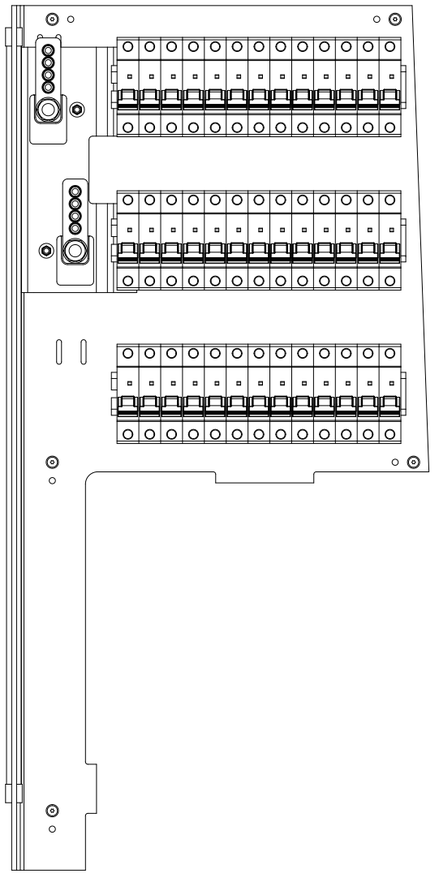

36414 Axopar 45 WARDROBE DC FUSE PANEL

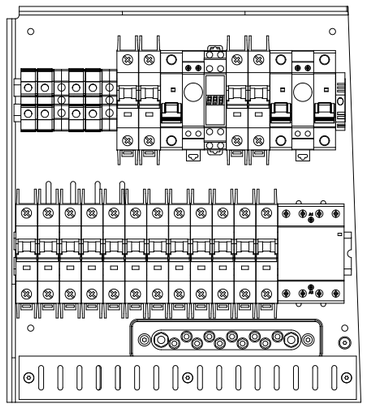

38353 Axopar 45 STANDARD WARDROBE AC FUSE PANEL - USA

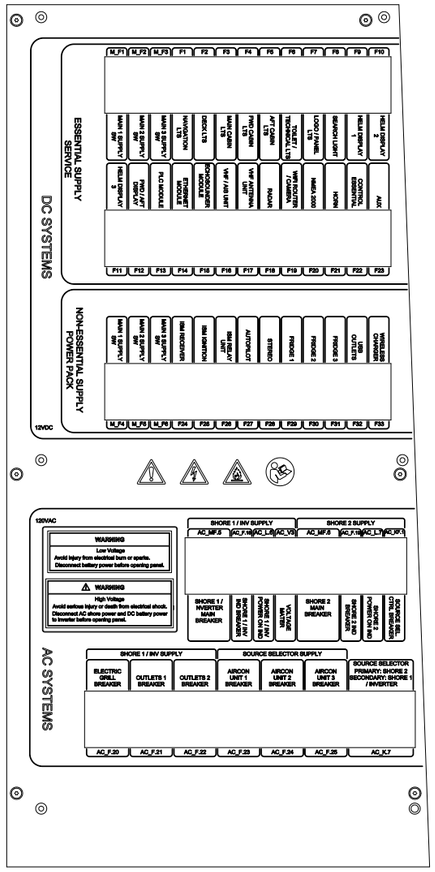

38351 Axopar 45 WARDROBE FUSE PANEL COVER, STANDARD - USA (WOC)

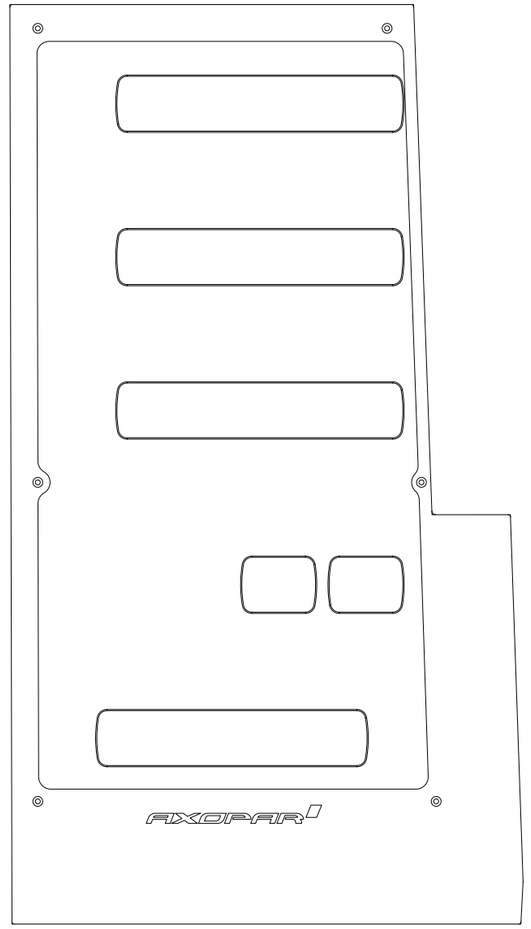

36453 AXOPAR_45_WARDROBE_FUSE_PANEL_WALL_V1

PACK ALL PRODUCTS TO SAME PACKAGE.

Date of modification	Modified by	Description		
30.5.2024	TuM	C3: 2005065; 38353 & 38351 UPDATED.	Date	24.3.2023
24.3.2023	TuM	A1: 2004274; INTRODUCED DRAWING	Drawing by	TuM
5.6.2023	TuM	B2: 2004274; 36414 & 38351 UPDATED.	Sheet rev.	3
			Project rev.	C

Copyright by NAVIX

Axopar		38349	
Boat	Sub-product code	Product code	Project ID
45	STANDARD WARDROBE FUSE PANEL - USA	HL	316 / 444
Boat model	Title	Loc	Sheet

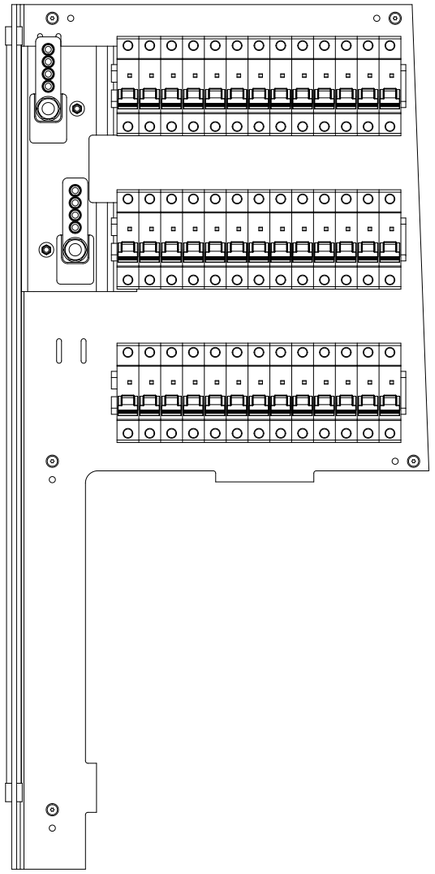

36414 Axopar 45 WARDROBE DC FUSE PANEL

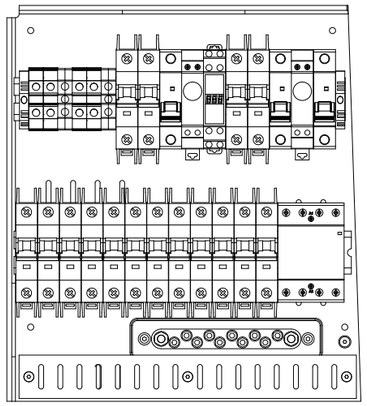

38358 Axopar 45 ZERO EM WARDROBE AC FUSE PANEL - USA

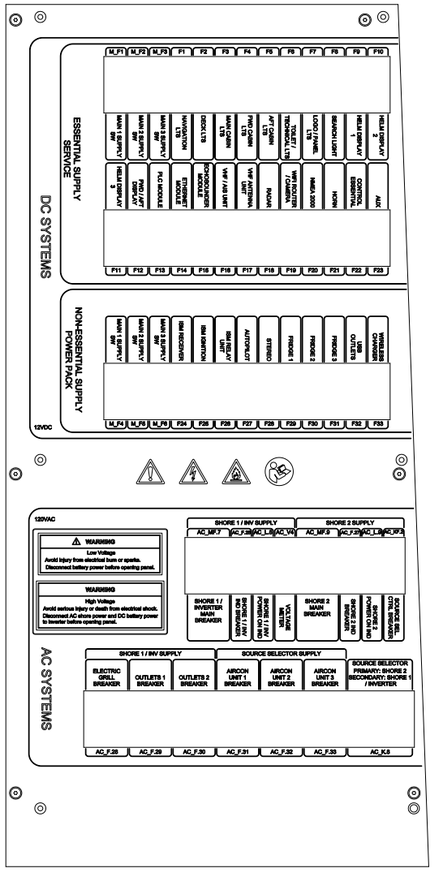

38483 Axopar 45 WARDROBE FUSE PANEL COVER, ZERO EM. - USA (WOC)

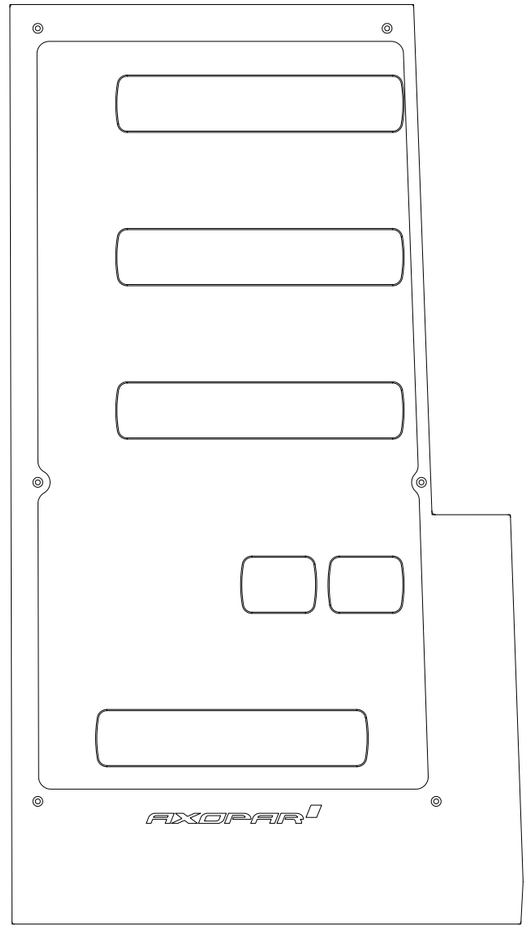

36453 AXOPAR_45_WARDROBE_FUSE_PANEL_WALL_V1

PACK ALL PRODUCTS TO SAME PACKAGE.

Date of modification	Modified by	Description						
30.5.2024	TuM	C3: 2005065; 38358 & 38483 UPDATED.	Date	30.3.2023	NAVIX	Axopar		38350	
30.3.2023	TuM	A1: 2004274; INTRODUCED DRAWING.	Drawing by	TuM					
5.6.2023	TuM	B2: 2004274; 36414 & 38483 UPDATED.	Sheet rev.	3		45	ZERO EM. WARDROBE FUSE PANEL - USA	HL	317 / 444
			Project rev.	C	Copyright by	Boat model	Title	Loc	Sheet

GENERAL LAYOUT

38352 Axopar 45 BASIC 120VAC SYSTEM - USA

TO MAIN GND POINT

TO MAIN DC NEG BUSBAR

(INCLUDES TO 38353)

39295 Axopar 45 MAIN GROUNDING CABLES - USA

REFERENCE ONLY NOT INCLUDED TO 38352

Axopar 45 STANDARD WARDROBE AC FUSE PANEL - USA

OPTIONAL
39296 Axopar 45 SECOND 120VAC SHORE LINE - USA
(REFERENCE ONLY, NOT INCLUDED IN 38352)

38615
1in-3out
Distribution block

38616

OPTIONAL 39674 Axopar 45 AFT CABIN SOCKET - USA
(REFERENCE ONLY, NOT INCLUDED IN 38352)

39013
8m RST CONNECTION CABLE
AWG14 - USA

39391 GFCI RECEP. NEMA 5-15R, White - USA
MAIN CABIN

39011
6m RST CONNECTION CABLE
AWG14 - USA

39391 GFCI RECEP. NEMA 5-15R, White - USA
FWD CABIN

39009
4m RST CONNECTION CABLE
AWG14 - USA

39391 GFCI RECEP. NEMA 5-15R, White - USA
FWD TOILET

39297 Axopar 45 FRONT CABIN A/C CABLES - USA
(REFERENCE ONLY, NOT INCLUDED IN 38352)

OPTIONAL 39298 Axopar 45 WHEEL HOUSE A/C CABLES - USA
(REFERENCE ONLY, NOT INCLUDED IN 38352)

39007
2m RST CONNECTION CABLE
AWG14 - USA

39007
2m RST CONNECTION CABLE
AWG14 - USA

GRILL, GALLEY

39463
0,4m RST20 MALE CABLE ASSEMBLY
AWG14 - USA

39318
7m RST CONNECTION CABLE
AWG12 - USA

39320
9m RST CONNECTION CABLE
AWG12 - USA

39320
9m RST CONNECTION CABLE
AWG12 - USA

OPTIONAL 39299 Axopar 45 FENDERBOX GRILL CABLES - USA
(REFERENCE ONLY, NOT INCLUDED IN 38352)

38354
Axopar 45 STANDARD SHORE 1 LINE AC MAIN BRK UNIT - USA

TO MARINA

39021
DECK CONTACT MARINCO US
PHOENIX - 250cm
AWG 10 WITH TUBE

SHORE #1
125Vac, 60Hz
30A
NEMA L5-30

19367
Shore Power Cable 30A/125V/ 15m
YELLOW

26895
GALVANIC ISOLATOR
32A

39074
10m PHOENIX CONNECTION CABLE
AWG10 - USA

39066
2m PHOENIX CONNECTION CABLE
AWG10 - USA

38356
Axopar 45 STANDARD TECHNICAL
AC BRK UNIT - USA

CHR #1
(START BT)

CHR #2
ESS SERV/ BOW TH)

39450
BERKER SURFACE RECEP.
NEMA 5-15R, White, - USA

39450
BERKER SURFACE RECEP.
NEMA 5-15R, White, - USA

39015
10m RST CONNECTION CABLE
AWG14 - USA

39015
10m RST CONNECTION CABLE
AWG14 - USA

15A+25A (Max.)

INV/CHR

AC OUT-2

AC OUT-1

AC IN

(INCLUDE TO 38355)

AWG10 - 1m

(INCLUDE TO 38355)

AWG8 - 1m

39007
2m RST CONNECTION CABLE
AWG14 - USA

39463
0,4m RST20 MALE CABLE ASSEMBLY
AWG14 - USA

WATER HEATER

39010
5m RST CONNECTION CABLE
AWG14 - USA

38355
Axopar 45 STANDARD INV/CHR AC
MAIN BRK UNIT - USA

39465
0,4m PHOENIX MALE CABLE ASSEMBLY
AWG10 - USA

Date of modification	Modified by	Description
6.4.2023	TuM	A1: 2004274; INTRODUCED DRAWING.
5.9.2023	TuM	B2: 2004274; SYSTEM STRUCTURE ADDED.
28.5.2024	TuM	C3: 2005065: Galvanic isolator changed 30A -->32A.

Date	6.4.2023
Drawing by	TuM
Sheet rev.	3
Project rev.	C

NAVIX

Copyright by

Axopar		38352	
Boat	Sub-product code	Product code	Project ID
45	BASIC 120VAC SYSTEM - USA	HL	318 / 444
Boat model	Title	Loc	Sheet

GENERAL LAYOUT/ LABEL INSTALLATION

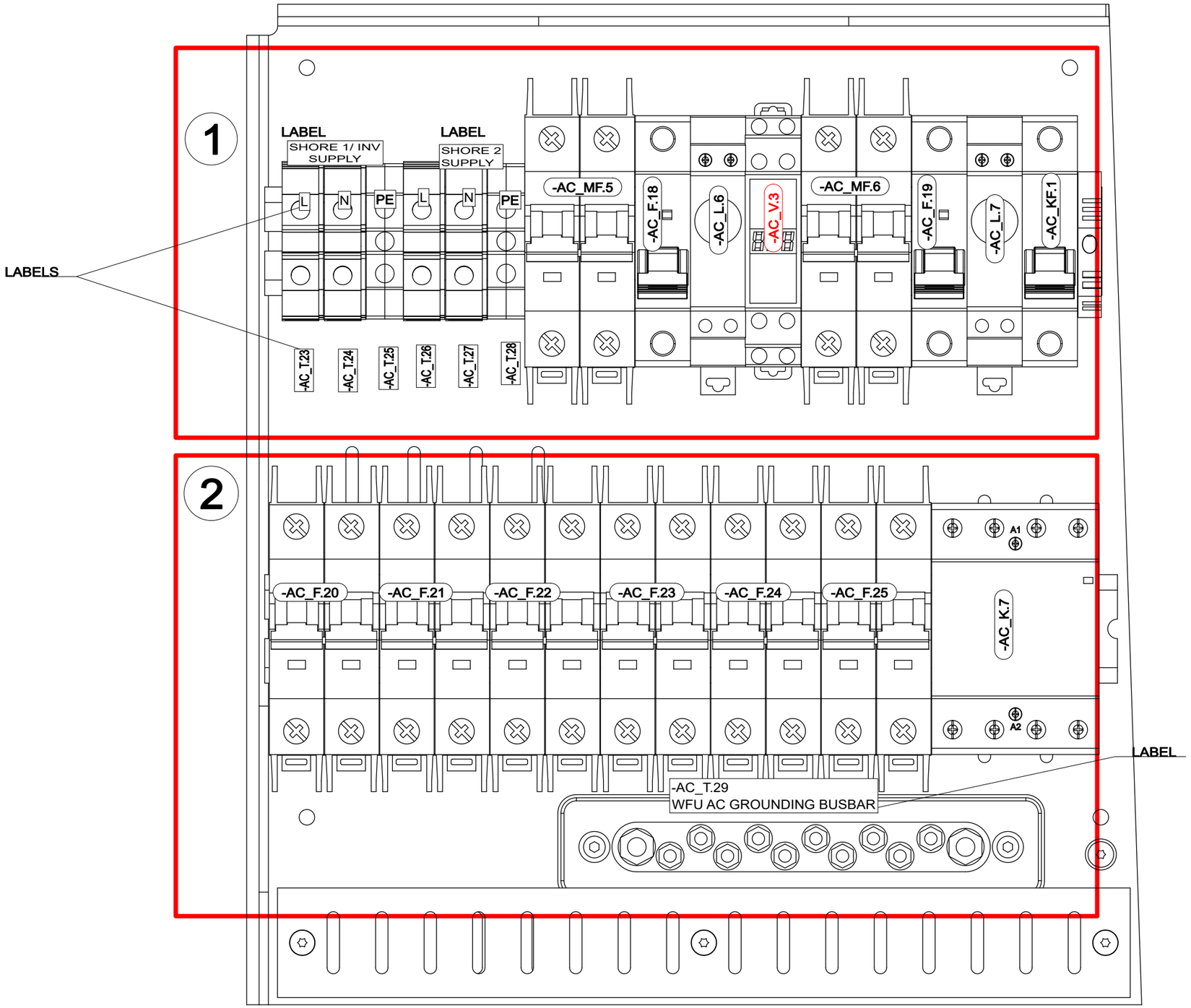

Date of modification	Modified by	Description
21.3.2023	TuM	A1: 2004274; INTRODUCED DRAWING.
23.8.2023	TuM/VR	B2: 2004274; e.g. ADDED CABLES
30.5.2024	TuM	C3: 2005065; Voltage meter AC_V3, Grounding cable added.

Date	21.3.2023
Drawing by	TuM
Sheet rev.	3
Project rev.	C

NAVIX

Copyright by

Axopar	SEE EXP VIEW	38353		
Boat	Sub-product code	Product code	Project ID	
45	STANDARD WARDROBE	HL	319 / 444	
Boat model	Title	Loc	Sheet	
	AC FUSE PANEL - USA			

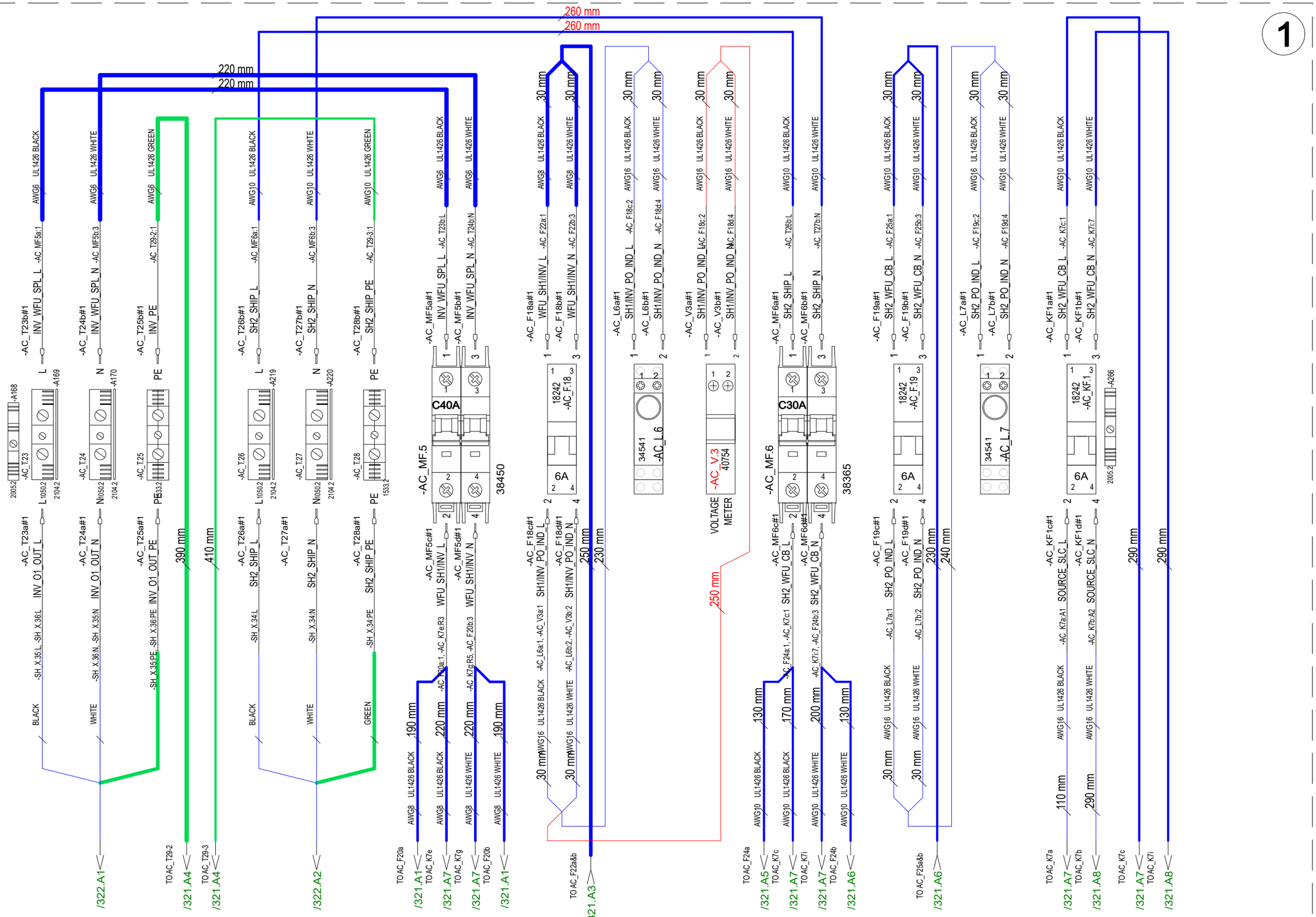

21.3.2023	TuM	A1: 2004274; INTRODUCED DRAWING.	Date	21.3.2023	NAVIX	Axopar	SEE EXP VIEW	38353	
23.8.2023	TuM/VR	B2: 2004274; e.g. ADDED CABLES	Drawing by	TuM		Boat	Sub-product code	Product code	Project ID
30.5.2024	TuM	C3: 2005065; Voltage meter AC_V3, Grounding cable added.	Sheet rev.	3		45	STANDARD WARDROBE AC FUSE PANEL - USA	HL	320 / 444
Date of modification	Modified by	Description	Project rev.	C	Copyright by	Boat model	Title	Loc	Sheet

2

-AC_F.20
38418
C20A
-AC_F20a#1 WFU_SH1/INV_L -AC_MF5c:2, -AC_F21a:1
-AC_F20b#1 WFU_SH1/INV_N -AC_MF5d:4, -AC_F21b:3
-AC_F20c#1 EL GRILL_L -SH_X38:L
-AC_F20d#1 EL_GRILL_N -SH_X38:N
-SH_X37:L, -SH_X38:L BLACK
-SH_X37:N, -SH_X38:N WHITE
GREEN /321.D3
GREEN /321.D4
/322.A3

-AC_F.21
38417
C15A
-AC_F21a#1 WFU_SH1/INV_L -AC_F22a:1, -AC_F20a:1
-AC_F21b#1 WFU_SH1/INV_N -AC_F20b:3, -AC_F22b:3
-AC_F21c#1 ACCOM_OUTLET_L -SH_X39:L
-AC_F21d#1 ACCOM_OUTLET_N -SH_X39:N
BLACK
WHITE
GREEN /321.D4
/322.A3

-AC_F.22
38417
C15A
-AC_F22a#1 WFU_SH1/INV_L -AC_F18a:1, -AC_F21a:1
-AC_F22b#1 WFU_SH1/INV_N -AC_F18b:3, -AC_F21b:3
-AC_F22c#1 TOIL/WETB_OUTLET_L -SH_X40:L
-AC_F22d#1 TOIL/WETB_OUTLET_N -SH_X40:N
BLACK
WHITE
GREEN /321.D4
/322.A4

AWG8 UL1426 BLACK 110 mm
AWG8 UL1426 WHITE 110 mm
30 mm
/320.F4

AWG6 UL1426 GREEN
AWG10 UL1426 GREEN
/320.F2

-AC_T:29
2301
28042
WFU AC GROUNDING BUSBAR
-AC_T25b:PE
-AC_T29-2#1 6 INV_PE
-AC_T29-10#1 EL GRILL_PE
-AC_T29-4#1 EL GRILL_PE
-AC_T29-5#1 ACCOM_OUTLET_PE
-AC_T29-6#1 TOIL/WETB_OUTLET_PE
-AC_T29-7#1 A/C U1_PE
-AC_T29-8#1 A/C U2_PE
-AC_T29-9#1 A/C U3_PE
-AC_T29-3#1 4 SH2_SHIP_PE
-AC_T28b:PE
-SH_X37:PE
-SH_X38:PE
-SH_X39:PE
-SH_X40:PE
-SH_X41:PE
-SH_X42:PE
-SH_X43:PE
/321.E1
/321.E2
/321.E2
/321.E3
/321.E5
/321.E6
/321.E7

-AC_F.23
38418
C20A
-AC_F23a#1 WFU_SS_L -AC_K7f:R4
-AC_F23b#1 WFU_SS_N -AC_K7h:R6
-AC_F23c#1 A/C U1_L -SH_X41:L
-AC_F23d#1 A/C U1_N -SH_X41:N
BLACK
WHITE
GREEN /321.D4
/322.A5

-AC_F.24
38418
C20A
-AC_F24a#1 SH2_WFU_CB_L -AC_MF6c:2, -AC_F25a:1
-AC_F24b#1 SH2_WFU_CB_N -AC_MF6d:4, -AC_F25b:3
-AC_F24c#1 A/C U2_L -SH_X42:L
-AC_F24d#1 A/C U2_N -SH_X42:N
BLACK
WHITE
GREEN /321.D4
/322.A5

-AC_F.25
38418
C20A
-AC_F25a#1 SH2_WFU_CB_L -AC_F19a:1, -AC_F24a:1
-AC_F25b#1 SH2_WFU_CB_N -AC_F19b:3, -AC_F24b:3
-AC_F25c#1 A/C U3_L -SH_X43:L
-AC_F25d#1 A/C U3_N -SH_X43:N
BLACK
WHITE
GREEN /321.D4
/322.A6

AWG10 UL1426 BLACK 110 mm
AWG10 UL1426 WHITE 110 mm
30 mm
/320.F5
/320.F6
/320.F6

390 mm
380 mm

-AC_K.7
28870
-AC_K7c#1 SH2_WFU_CB_L -AC_KF1a:1, -AC_MF6c:2
-AC_K7e#1 WFU_SH1/INV_L -AC_MF5c:2
-AC_K7a#1 SOURCE_SLC_L -AC_KF1c:2
-AC_K7g#1 WFU_SH1/INV_N -AC_MF5d:4
-AC_K7i#1 SH2_WFU_CB_N -AC_MF6d:4, -AC_KF1b:3
-AC_K7d#1 WFU_SS_L -AC_K7f:R4
-AC_K7f#1 WFU_SS_L -AC_F23a:1, -AC_K7d:2
-AC_K7b#1 SOURCE_SLC_N -AC_KF1d:4
-AC_K7h#1 WFU_SS_N -AC_F23b:3, -AC_K7j:8
-AC_K7j#1 WFU_SS_N -AC_K7h:R6
AWG10 UL1426 BLACK
AWG10 UL1426 WHITE
AWG8 UL1426 BLACK
AWG16 UL1426 BLACK
AWG8 UL1426 WHITE
90 mm
/320.F6
/320.F7
/320.F4
/320.F7
/320.F4
/320.F6
/320.F8
/320.F7

21.3.2023	TuM	A1: 2004274; INTRODUCED DRAWING.	Date	21.3.2023	NAVIX	Axopar	SEE EXP VIEW	38353	
23.8.2023	TuM/VR	B2: 2004274; e.g. ADDED CABLES	Drawing by	TuM		Boat	Sub-product code	Product code	Project ID
30.5.2024	TuM	C3: 2005065; Voltage meter AC_V3, Grounding cable added.	Sheet rev.	3		45	STANDARD WARDROBE	HL	
Date of modification	Modified by	Description	Project rev.	C	Copyright by	Boat model	AC FUSE PANEL - USA	Loc	321/ 444
							Title		Sheet

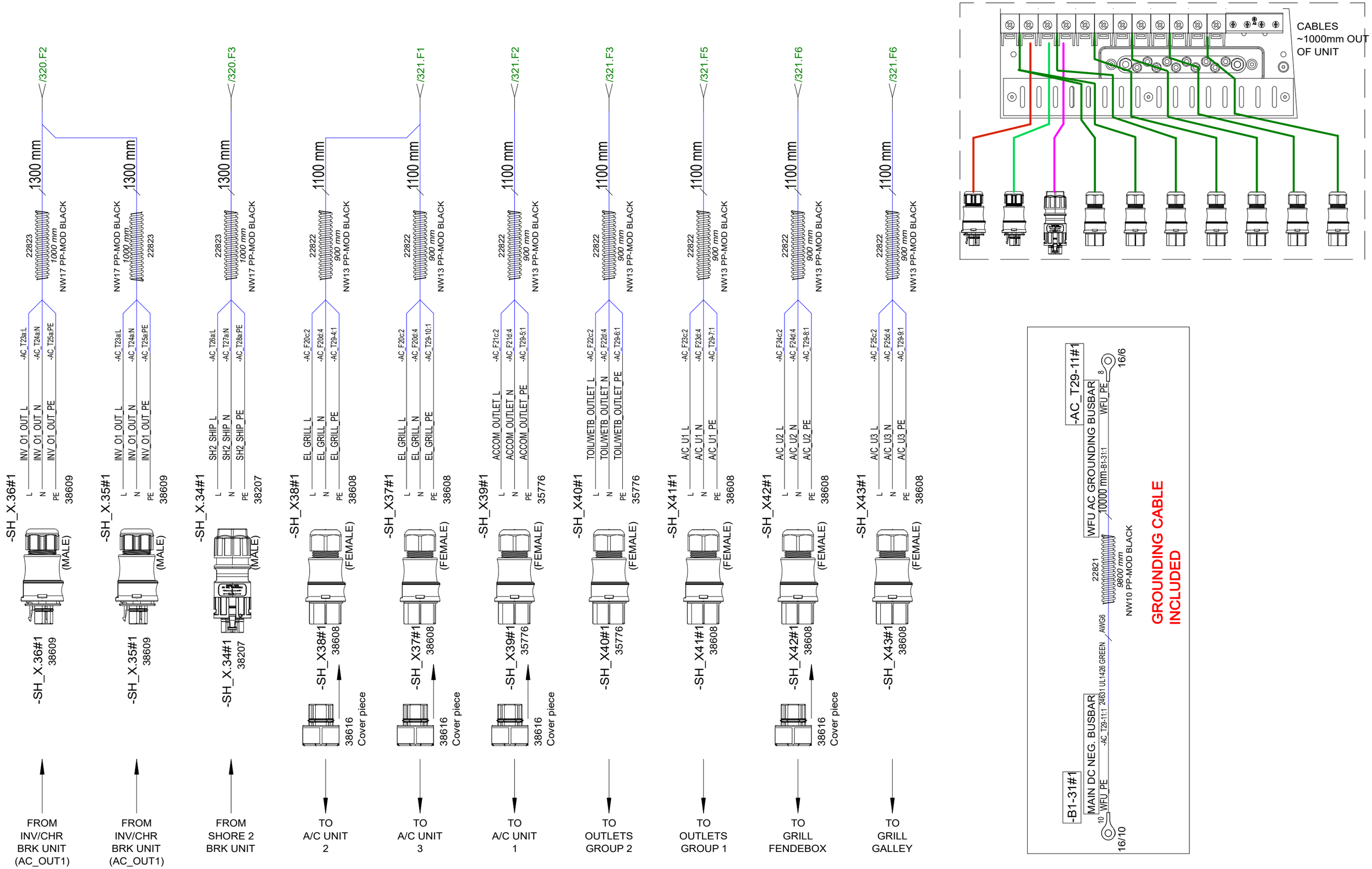

21.3.2023	TuM	A1: 2004274; INTRODUCED DRAWING.	Date	22.8.2023	NAVIX	Axopar	SEE EXP-VIEW	38353	
23.8.2023	TuM/VR	B2: 2004274; e.g. ADDED CABLES	Drawing by	TuM		Boat	Sub-product code	Product code	Project ID
30.5.2024	TuM	C3: 2005065; Voltage meter AC_V3, Grounding cable added.	Sheet rev.	3		45	STANDARD WARDROBE	HL	322 / 444
Date of modification	Modified by	Description	Project rev.	C	Copyright by	Boat model	AC FUSE PANEL - USA	Loc	Sheet
							Title		

EXP VIEW GENERAL

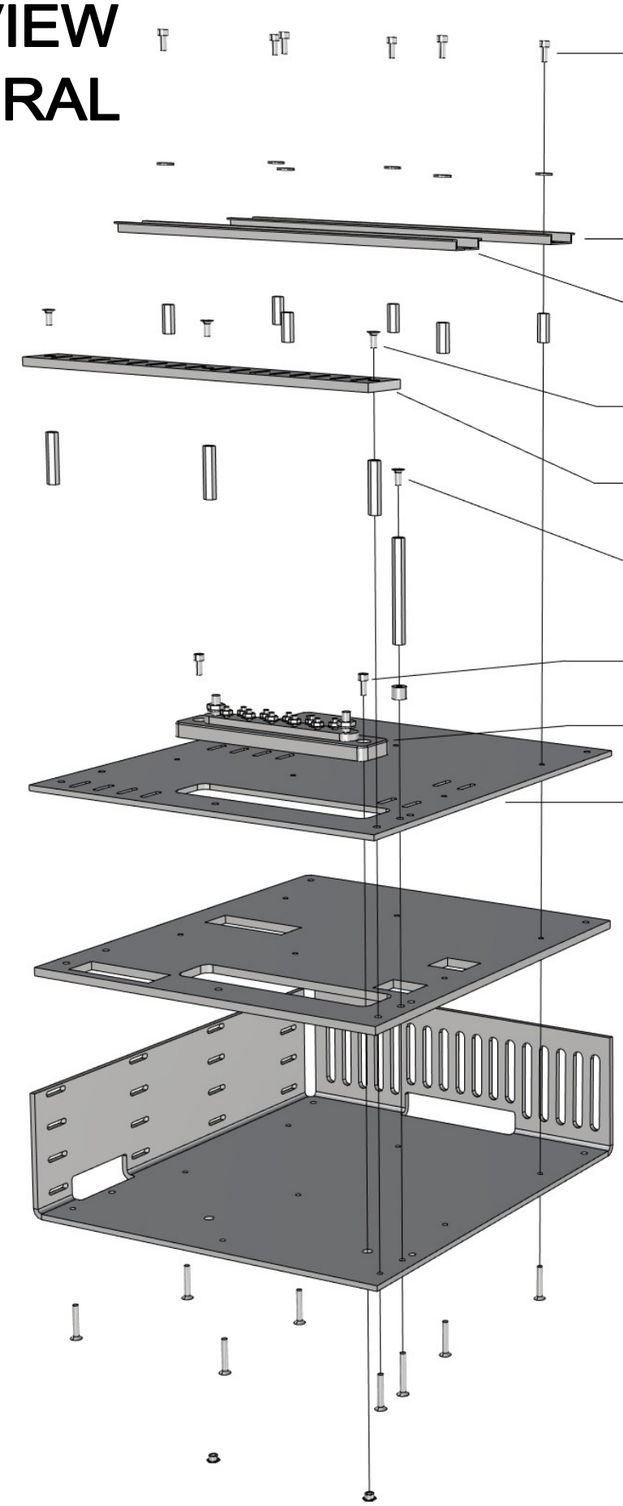

1.

2.

3.

4.

5.

6.

7.

8.

9.

10.

11.

38353_AXOPAR_45_STANDARD_WARDROBE_AC_FUSE_PANEL_USA

1. 6PCS VMI30943 HEX SOCKET HEAD CAP SCREW M4X10 DIN912
 6PCS VMI30907 M4 WASHER WITH LARGE OUTSIDE DIAMETER 12MM DIN9021
 6PCS VMI32036 EXTENSION BOLT M4 L-20
 6PCS VMI30919 COUNTERSUNK HEAD SCREW HEX SOCKET M4X25 DIN7991

2. 1PCS DIN_RAIL_270mm

3. 1PCS DIN_RAIL_275mm

4. 3PCS VMI30914 COUNTERSUNK HEAD SCREW HEX SOCKET M4X10 DIN7991
 3PCS VMI32039 EXTENSION BOLT M4 L-35
 3PCS VMI30919 COUNTERSUNK HEAD SCREW HEX SOCKET M4X25 DIN7991

5. 1PC 36444_AXOPAR_45_ZERO_EM_WARDROBE_AC_BRK_PANEL_EU_RACK_V1

6. 1PCS 27022_BOLT_M4X10_HEX_COATED_SOFT_BLACK (TIGHTEN LOOSELY)
 1PCS VMI35429 EXTENSION BOLT M4 L-70
 1PCS 15569_NAVIX_LINE_8mm_SPACER
 1PCS VMI30920 COUNTERSUNK HEAD SCREW HEX SOCKET M4X30 DIN7991

7. 2PCS VMI30943 HEX SOCKET HEAD CAP SCREW M4X10 DIN912
 2PCS 9872 M4 X 4 ETSOS

8. 1PC 28042 - Busbar 10 Gang 150A - Blue Sea 2301

9. 1PC 36443_AXOPAR_45_ZERO_EM_WARDROBE_AC_BRK_PANEL_EU_TOP_V1

10. 1PC 36442_AXOPAR_45_ZERO_EM_WARDROBE_AC_BRK_PANEL_EU_MID_V1

11. 1PC 36441_AXOPAR_45_ZERO_EM_WARDROBE_AC_BRK_PANEL_EU_BACK_V1

17.02.2023 TS

Date of modification	Modified by	Description
21.3.2023	TuM	A1: 2004274; INTRODUCED DRAWING.
23.8.2023	TuM/VR	B2: 2004274; e.g. ADDED CABLES
30.5.2024	TuM	C3: 2005065; Voltage meter AC_V3, Grounding cable added.

Date	21.3.2023
Drawing by	TuM
Sheet rev.	3
Project rev.	C

Copyright by

NAVIX

Axopar Boat	SEE EXP VIEW Sub-product code	38353 Product code	Project ID
45 Boat model	STANDARD WARDROBE AC FUSE PANEL - USA Title	HL Loc	323 / 444 Sheet

USA SPC INSPECTION SHEET

PRODUCT LABEL

* DDMMYY-RUNNING NUMBER (For example. 11th March 2019 made product has serial number 110319-01, next is 110319-02 etc.)

	SERIAL NUMBER*						
VISUAL/ MANUAL	1. PERFORM FULL SYSTEM TEST -LABEL IN PLACE						
	2. CORRECT COMPONENTS AND CONNECTIONS						
	3. GROUND CONNECTION IN AND OUT						
	4. RCBO AND CIRCUIT BREAKERS IN I-POSITION						
TESTER	5. ISOLATION RESISTANCE (mA) max **						
	6. GROUND CIRCUIT 10A (Ohm) max **						
	7. RCD TEST, (ms @30mA) max						
	8. POLARITY TEST, PASS or FAIL **						
115Vac VOLTAGE LIVE	9. FUNCTIONAL AND RCD*** TEST, PASS or FAIL						
	SERIAL NUMBER STICKER						
	DATE						
	TESTED BY						

Made according to CENELEC EN 50106:2008 WITH ADDITION OF (8) POLARITY TEST AND (9) 115Vac FUNCTIONAL AND RCD TEST

** (5) ISOLATION RESISTANCE, (6) GROUND CIRCUIT AND (8) POLARITY TEST SHOULD BE TESTED FOR EVERY IN AND OUT

*** (9) RDC TEST-BUTTON OPERATION VERIFICATION

LIMITS:

ISOLATING RESISTOR 1000V = <5mA

GROUND CIRCUIT 10A = <0,2 Ohm

RDC TEST, Time <100mS @30mA

REVISION B

Date of modification	Modified by	Description
21.3.2023	TuM	A1: 2004274; INTRODUCED DRAWING.
23.8.2023	TuM/VR	B2: 2004274; e.g. ADDED CABLES
30.5.2024	TuM	C3: 2005065; Voltage meter AC_V3, Grounding cable added.

Date	21.3.2023
Drawing by	TuM
Sheet rev.	3
Project rev.	C

Copyright by NAVIX

Axopar	SEE EXP VIEW	38353	
Boat	Sub-product code	Product code	Project ID
45	STANDARD WARDROBE	HL	324 / 444
Boat model	Title	Loc	Sheet

AC FUSE PANEL - USA

GENERAL LAYOUT/ LABEL INSTALLATION

WITHOUT COVER

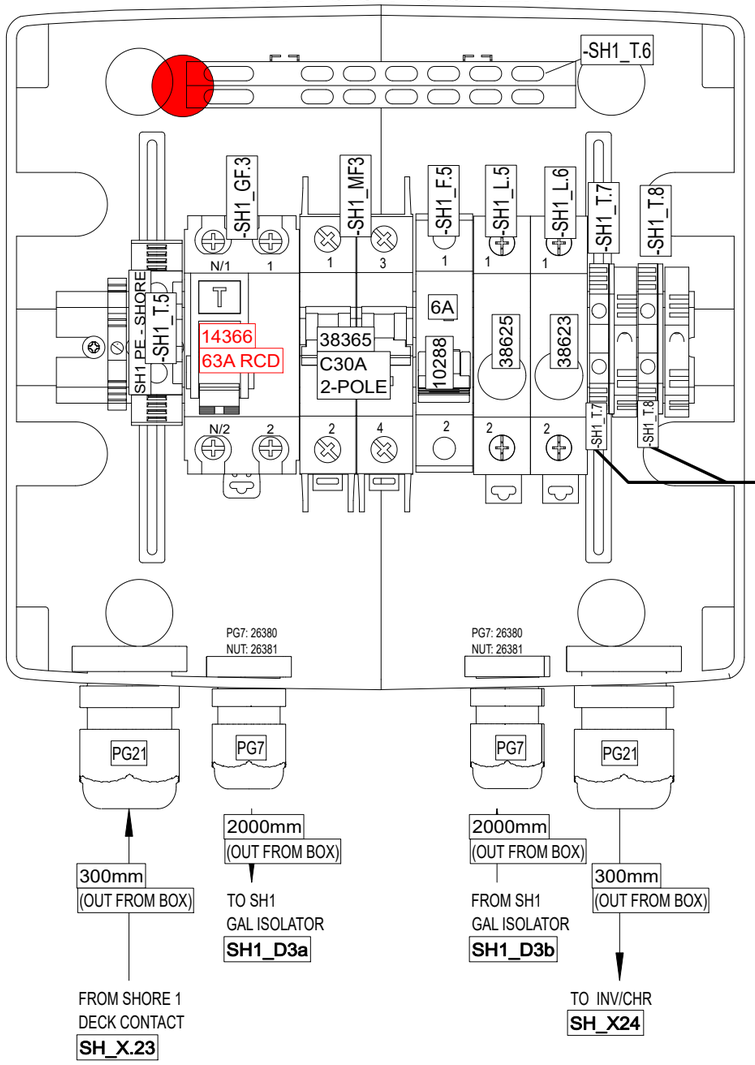

LABELS

ENCLOSURE:
18113 (8-mod)

WITH COVER

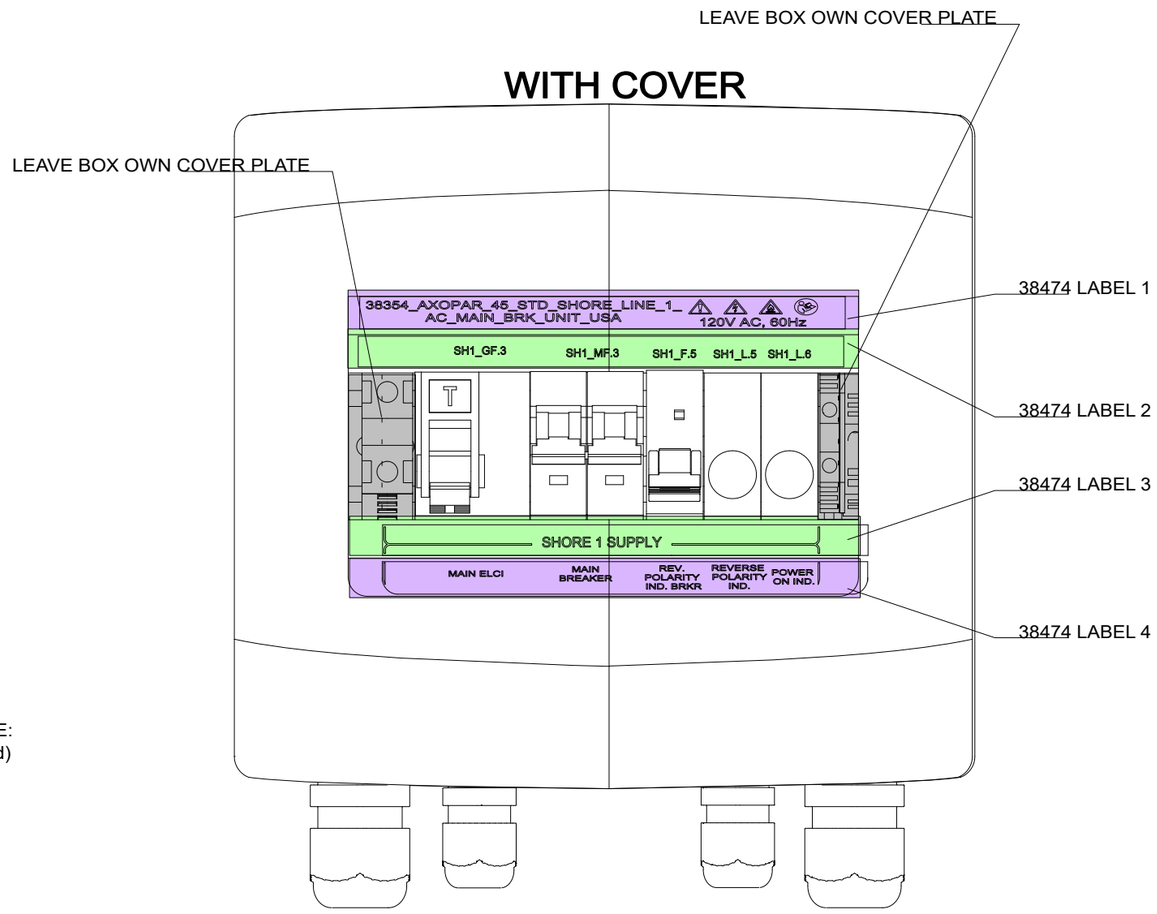

INCLUDED TO DELIVERY

1 x



34599_NAVIX_ABYC_INVERTER_WARNING_LABEL_V1

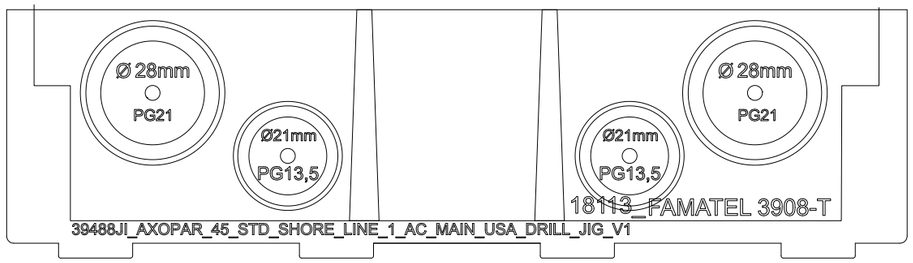

DRILL HOLES WITH 39473JI_V1 AND 39488JI_V1 AS GUIDE

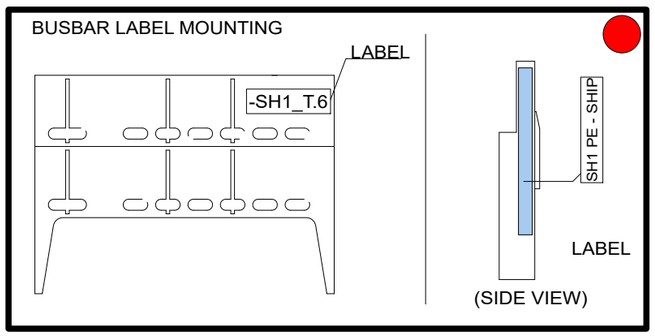

Date of modification	Modified by	Description
20.3.2023	TuM	A1: 2004274; INTRODUCED DRAWING.
23.8.2023	TuM/VR	B2: 2004274; ADDED CABLES, REMOVED SH1_F.6
9.11.2023	PF/TuM	C3: 2004890; Added end clamp, 2005065: SH1_GF3 TYPE CHANGED TO 14366 RCD.

Date 20.3.2023
Drawing by TuM
Checked by
Project rev. C

Copyright by

NAVIX

Boat: Axopar
Boat model: 45
Sub-product code: 38474
Product code: 38354
Project ID:
Title: STANDARD SHORE 1 LINE AC MAIN BRK UNIT - USA
Loc:
Sheet: 325 / 444

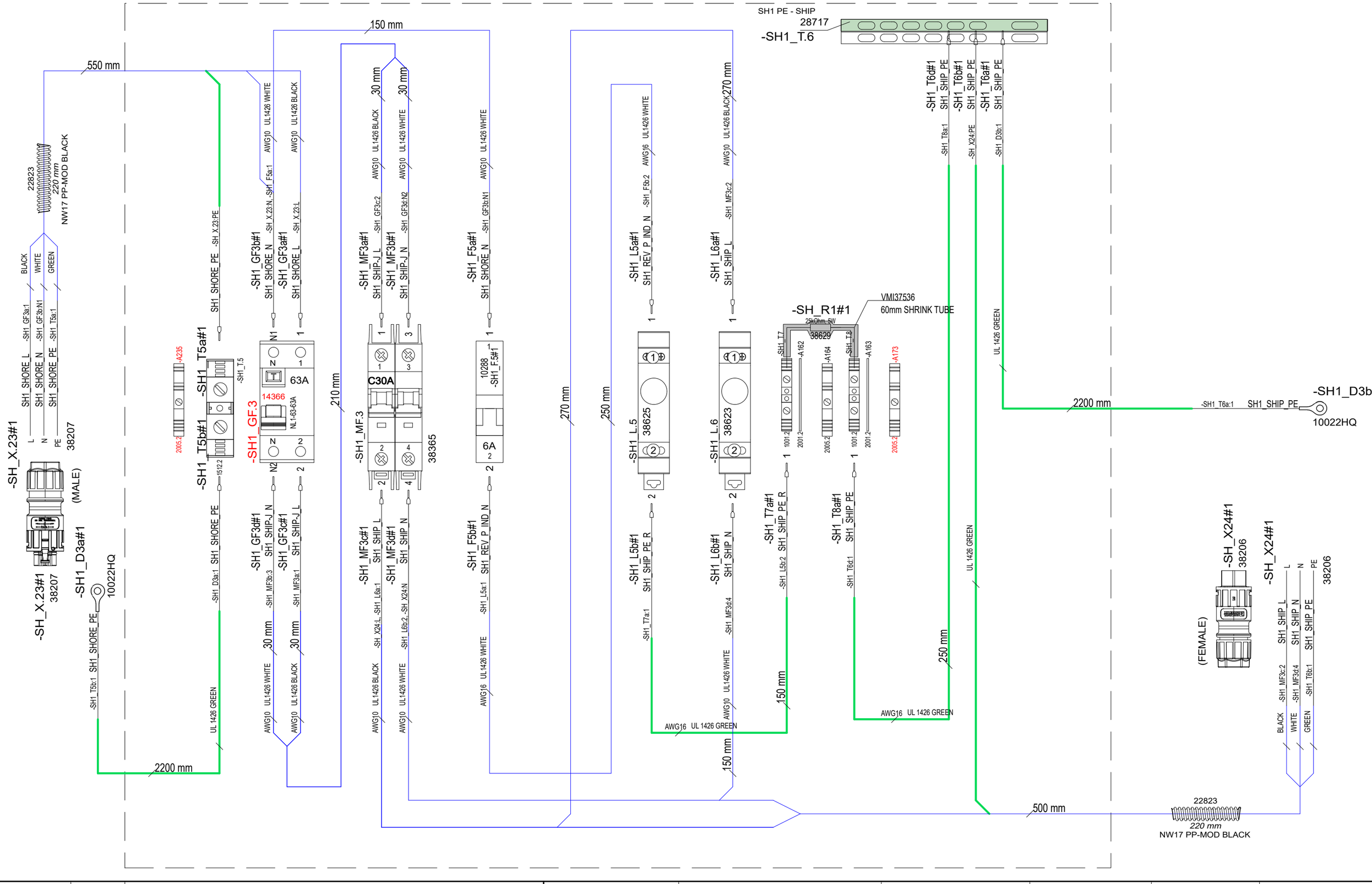

Date of modification	Modified by	Description					
20.3.2023	TuM	A1: 2004274; INTRODUCED DRAWING.	Date	20.3.2023	NAVIX	Axopar	38474 / 38354 / Project ID
23.8.2023	TuM/VR	B2: 2004274; ADDED CABLES, REMOVED SH1_F.6	Drawing by	TuM		Boat	Sub-product code / Product code
9.11.2023	PF/TuM	C3: 2004890; Added end clamp, 2005065: SH1_GF3 TYPE CHANGED TO 14366 RCD.	Checked by			45	STANDARD SHORE 1 LINE AC MAIN BRK UNIT - USA
			Project rev.	C	Copyright by	Boat model	Title / Loc / 326 / 444 Sheet

USA SPC INSPECTION SHEET

PRODUCT LABEL

* DDMMYY-RUNNING NUMBER (For example. 11th March 2019 made product has serial number 110319-01, next is 110319-02 etc.)

	SERIAL NUMBER*						
VISUAL/ MANUAL	1. PERFORM FULL SYSTEM TEST -LABEL IN PLACE						
	2. CORRECT COMPONENTS AND CONNECTIONS						
	3. GROUND CONNECTION IN AND OUT						
	4. RCBO AND CIRCUIT BREAKERS IN I-POSITION						
TESTER	5. ISOLATION RESISTANCE (mA) max **						
	6. GROUND CIRCUIT 10A (Ohm) max **						
	7. RCD TEST, (ms @30mA) max						
	8. POLARITY TEST, PASS or FAIL **						
115Vac VOLTAGE LIVE	9. FUNCTIONAL AND RCD*** TEST, PASS or FAIL						
	SERIAL NUMBER STICKER						
	DATE						
	TESTED BY						

Made according to CENELEC EN 50106:2008 WITH ADDITION OF (8) POLARITY TEST AND (9) 115Vac FUNCTIONAL AND RCD TEST

** (5) ISOLATION RESISTANCE, (6) GROUND CIRCUIT AND (8) POLARITY TEST SHOULD BE TESTED FOR EVERY IN AND OUT

*** (9) RDC TEST-BUTTON OPERATION VERIFICATION

LIMITS:

ISOLATING RESISTOR 1000V = <5mA

GROUND CIRCUIT 10A = <0,2 Ohm

RDC TEST, Time <100mS @30mA

REVISION B

Date of modification	Modified by	Description
20.3.2023	TuM	A1: 2004274; INTRODUCED DRAWING.
23.8.2023	TuM/VR	B2: 2004274; ADDED CABLES, REMOVED SH1_F.6
9.11.2023	PF/TuM	C3: 2004890; Added end clamp, 2005065: SH1_GF3 TYPE CHANGED TO 14366 RCD.

Date	20.3.2023
Drawing by	TuM
Checked by	
Project rev.	C

Copyright by NAVIX

Axopar	38474	38354	
Boat	Sub-product code	Product code	Project ID
45	STANDARD SHORE 1 LINE AC MAIN BRK UNIT - USA	PL	327 / 444
Boat model	Title	Loc	Sheet

GENERAL LAYOUT/ LABEL INSTALLATION

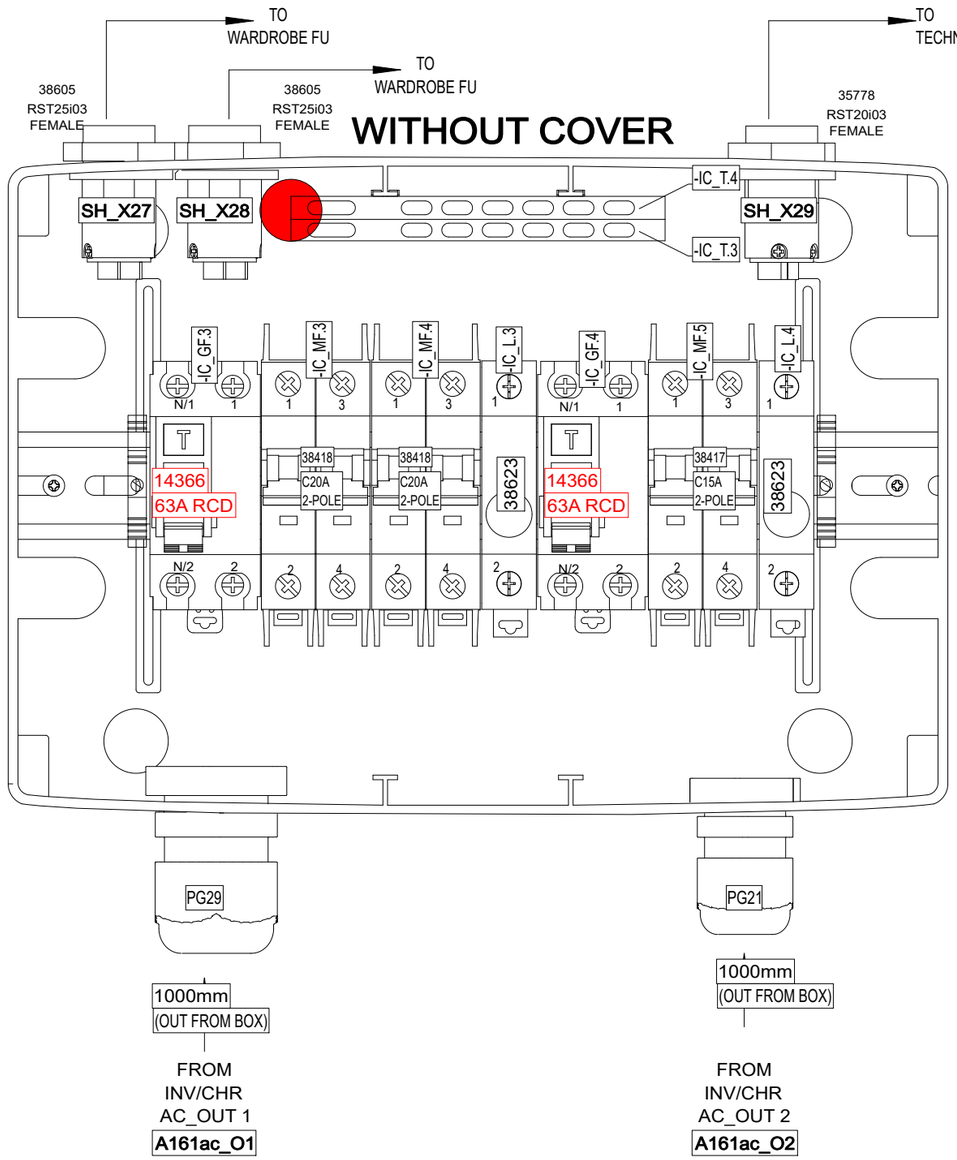

ENCLOSURE:
18114 (12-mod)

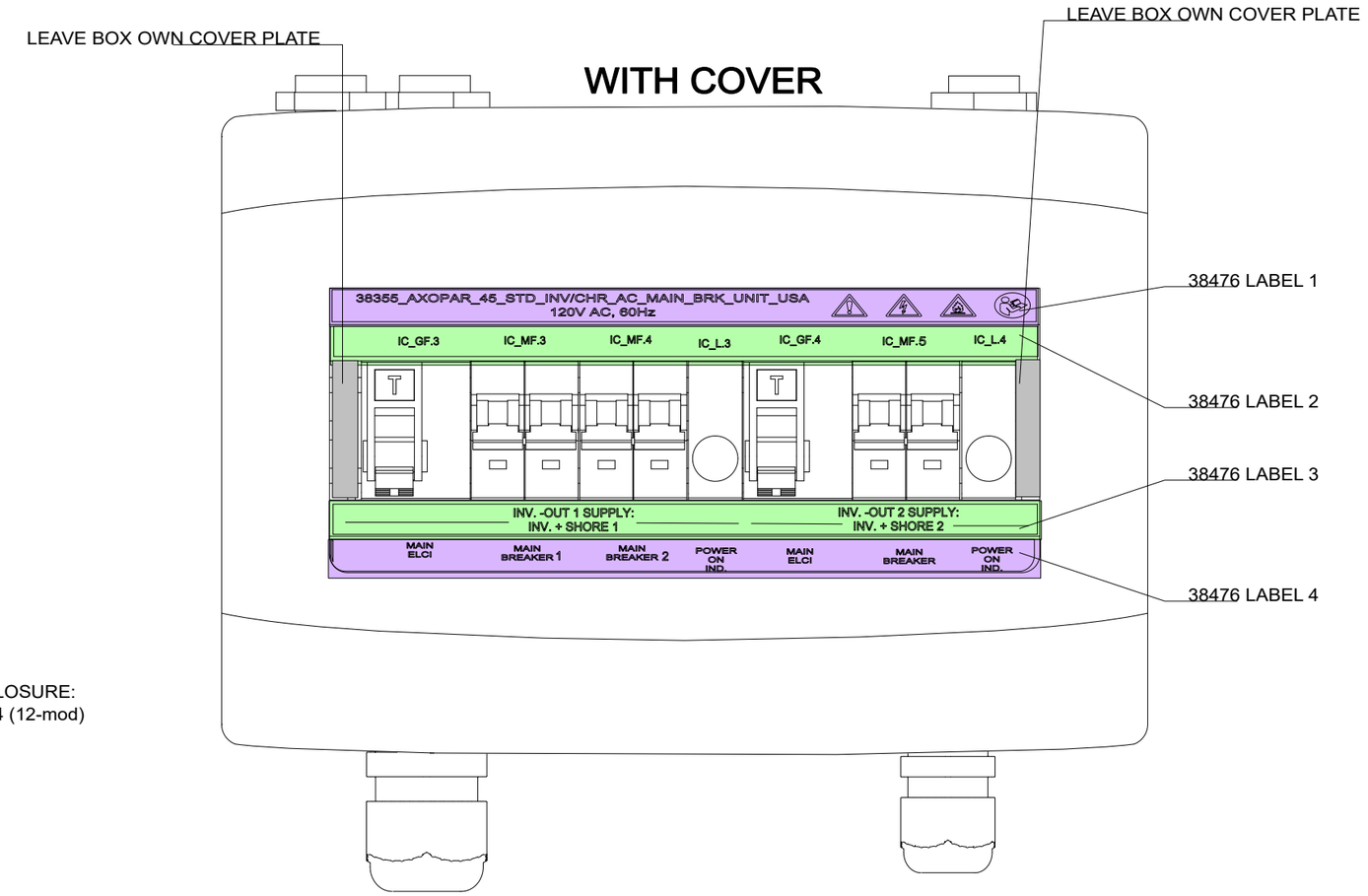

INCLUDED TO DELIVERY

1 x

⚠ WARNING
High Voltage
Avoid serious injury or death from electrical shock.
Disconnect AC shore power and DC battery power to inverter before opening panel.

34599_NAVIX_ABYC_INVERTER_CHARGER_WARNING_LABEL_V1

DRILL HOLES WITH 39478JI_V1 AND 39502JI_V1 AS GUIDE

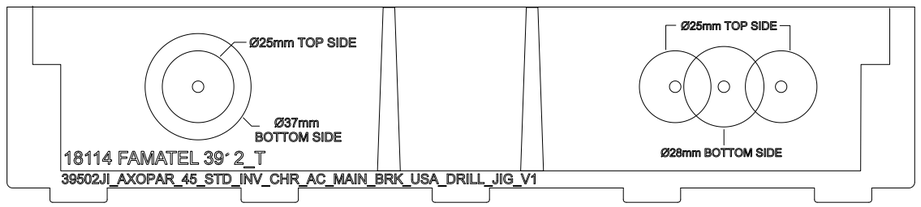

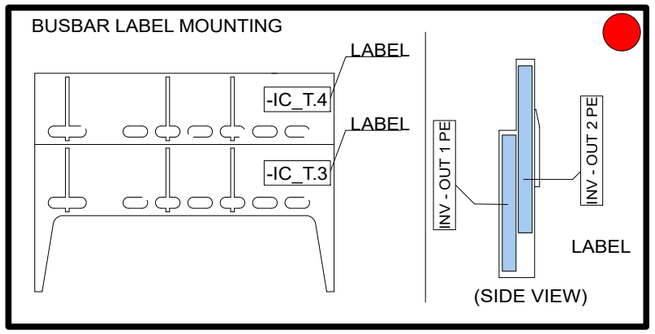

Date of modification	Modified by	Description
21.3.2023	TuM	A1: 2004274; INTRODUCED DRAWING.
28.8.2023	TuM/VR	B2: 2004274; ADDED CABLES
9.11.2023	PF/TuM	C3: 2004890; Added end clamps, 2005065: IC_GF3 & IC_GF4 TYPE CHANGED TO 14366 RCD.

Date 21.3.2023
Drawing by TuM
Checked by
Project rev. C

NAVIX
Copyright by

Boat	Sub-product code	Product code	Project ID
Axopar	38476	38355	
45	STANDARD INV/CHR AC MAIN BRK UNIT - USA	HL	328 / 444
Boat model	Title	Loc	Sheet

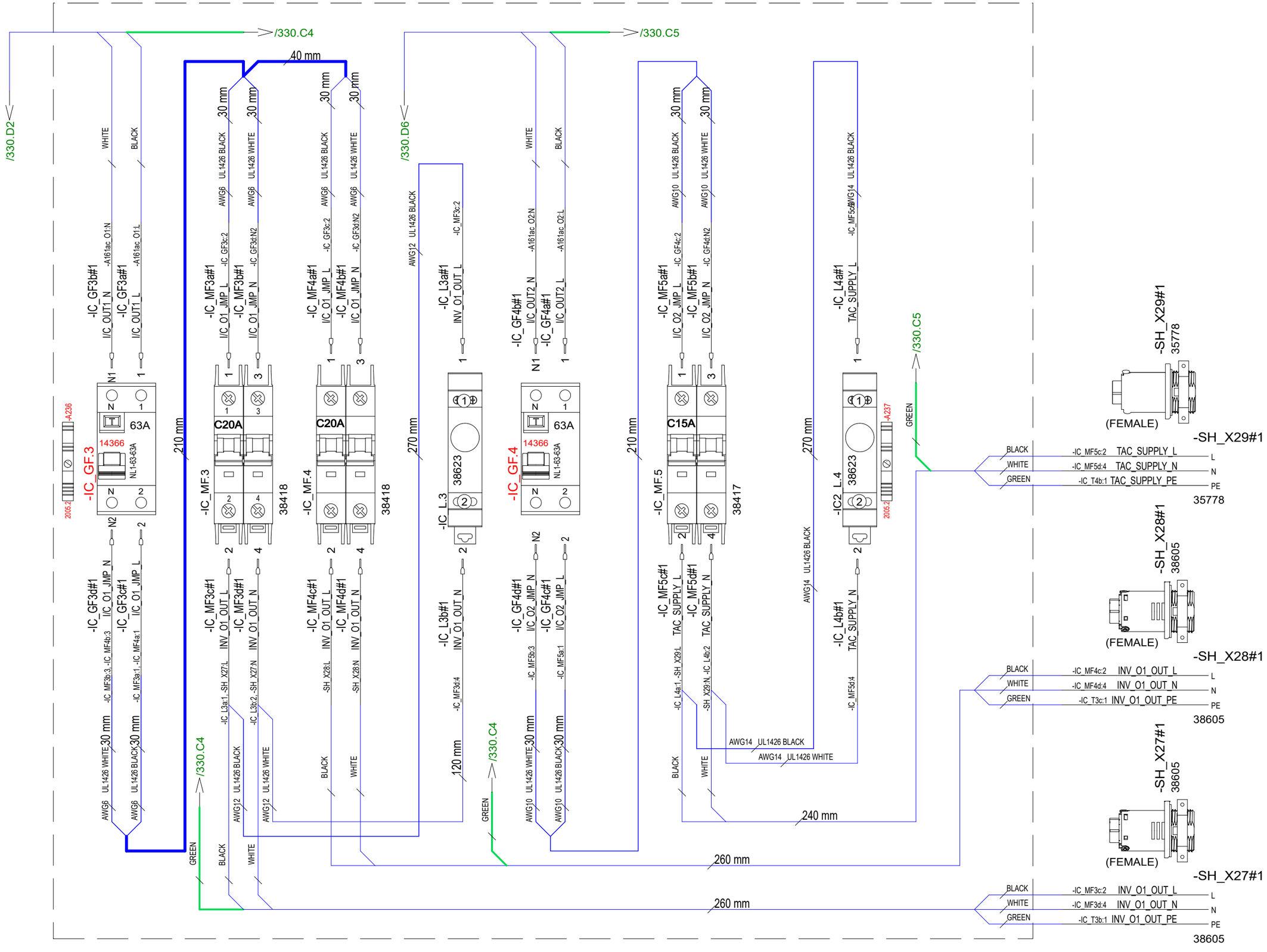

21.3.2023	TuM	A1: 2004274; INTRODUCED DRAWING.	Date	21.3.2023	NAVIX	Axopar	38476	38355	
28.8.2023	TuM/VR	B2: 2004274; ADDED CABLES	Drawing by	TuM		Boat	Sub-product code	Product code	Project ID
9.11.2023	PF/TuM	C3: 2004890; Added end clamps, 2005065: IC_GF3 & IC_GF4 TYPE CHANGED TO 14366 RCD.	Sheet rev.	3		45	STANDARD INV/CHR AC MAIN BRK UNIT - USA	HL	329 / 444
Date of modification	Modified by	Description	Project rev.	C	Copyright by	Boat model	Title	Loc	Sheet

ENCLOSURE TOP

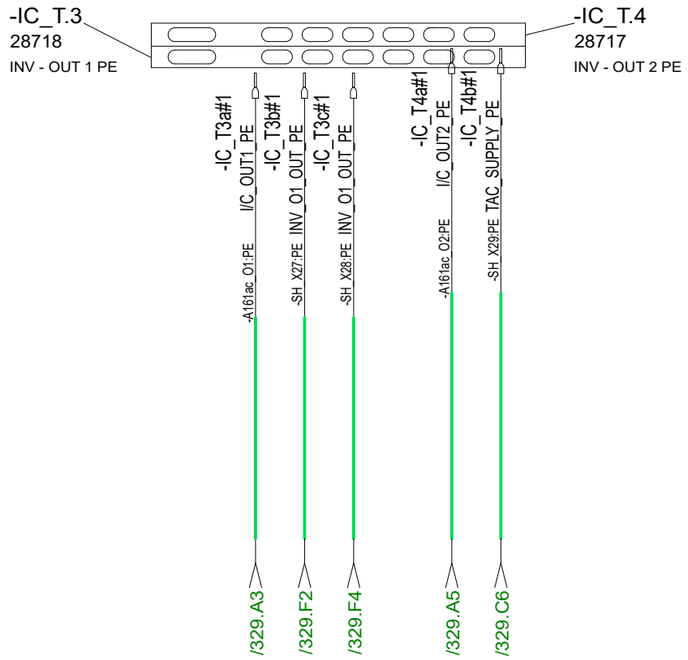

ENCLOSURE BOTTOM

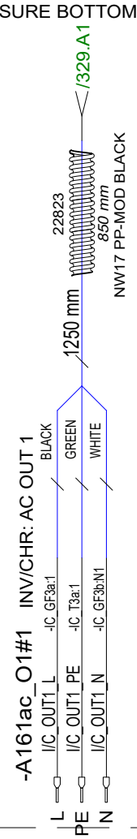

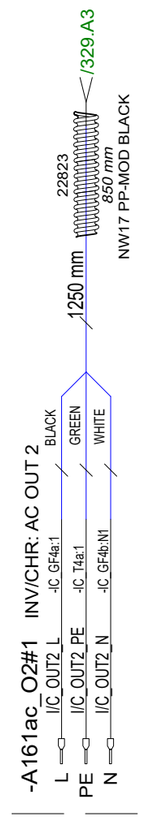

Date of modification	Modified by	Description						
21.3.2023	TuM	A1: 2004274; INTRODUCED DRAWING.	Date	21.3.2023	NAVIX	Axopar	38476	38355	
28.8.2023	TuM/VR	B2: 2004274; ADDED CABLES	Drawing by	TuM		Boat	Sub-product code	Product code	Project ID
9.11.2023	PF/TuM	C3: 2004890; Added end clamps, 2005065: IC_GF3 & IC_GF4 TYPE CHANGED TO 314366 RCD.	Sheet rev.	3		45	STANDARD INV/CHR AC MAIN BRK UNIT - USA	HL	330 / 444
			Project rev.	C	Copyright by	Boat model	Title	Loc	Sheet

USA SPC INSPECTION SHEET

PRODUCT LABEL

* DDMMYY-RUNNING NUMBER (For example. 11th March 2019 made product has serial number 110319-01, next is 110319-02 etc.)

	SERIAL NUMBER*						
VISUAL/ MANUAL	1. PERFORM FULL SYSTEM TEST -LABEL IN PLACE						
	2. CORRECT COMPONENTS AND CONNECTIONS						
	3. GROUND CONNECTION IN AND OUT						
	4. RCBO AND CIRCUIT BREAKERS IN I-POSITION						
TESTER	5. ISOLATION RESISTANCE (mA) max **						
	6. GROUND CIRCUIT 10A (Ohm) max **						
	7. RCD TEST, (ms @30mA) max						
	8. POLARITY TEST, PASS or FAIL **						
115Vac VOLTAGE LIVE	9. FUNCTIONAL AND RCD*** TEST, PASS or FAIL						
	SERIAL NUMBER STICKER						
	DATE						
	TESTED BY						

Made according to CENELEC EN 50106:2008 WITH ADDITION OF (8) POLARITY TEST AND (9) 115Vac FUNCTIONAL AND RCD TEST

** (5) ISOLATION RESISTANCE, (6) GROUND CIRCUIT AND (8) POLARITY TEST SHOULD BE TESTED FOR EVERY IN AND OUT

*** (9) RDC TEST-BUTTON OPERATION VERIFICATION

LIMITS:

ISOLATING RESISTOR 1000V = <5mA

GROUND CIRCUIT 10A = <0,2 Ohm

RDC TEST, Time <100mS @30mA

REVISION B

Date of modification	Modified by	Description
21.3.2023	TuM	A1: 2004274; INTRODUCED DRAWING.
28.8.2023	TuM/VR	B2: 2004274; ADDED CABLES
9.11.2023	PF/TuM	C3: 2004890; Added end clamps, 2005065: IC_GF3 & IC_GF4 TYPE CHANGED TO 314366 RCD.

Date	21.3.2023
Drawing by	TuM
Checked by	
Project rev.	C

Copyright by NAVIX

Axopar	38476	38355	
Boat	Sub-product code	Product code	Project ID
45	STANDARD INV/CHR AC MAIN BRK UNIT - USA	HL	331/ 444
Boat model	Title	Loc	Sheet

GENERAL LAYOUT/ LABEL INSTALLATION

WITHOUT COVER

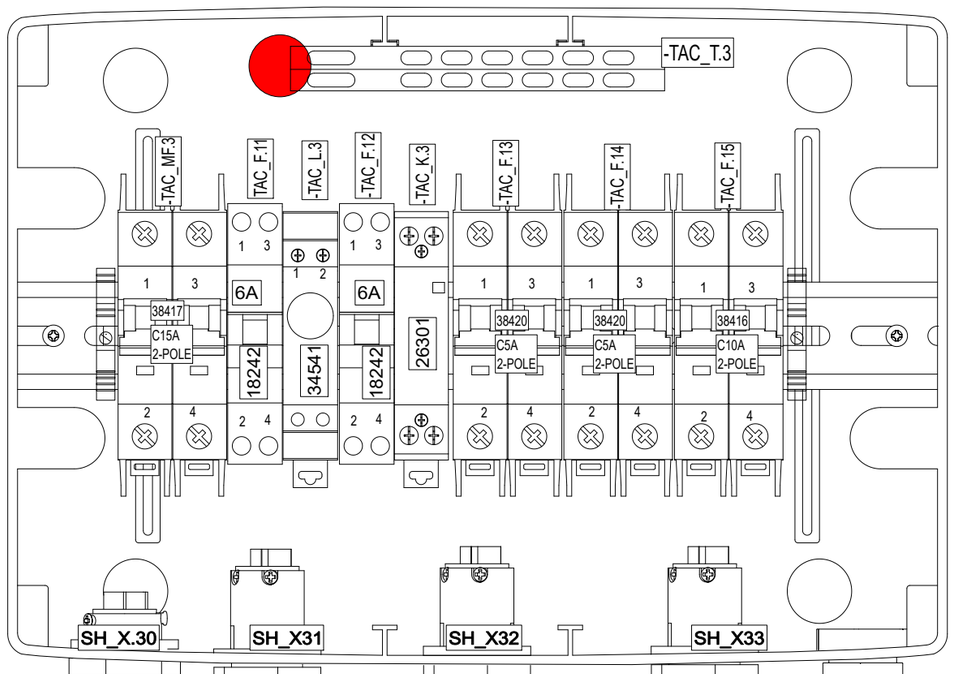

ENCLOSURE:
18114 (12-mod)

LABEL
12VDC
DC/DC CHARGER
CONTROL
(UNDER PG GLAND)

LEAVE BOX OWN COVER PLATE

WITH COVER

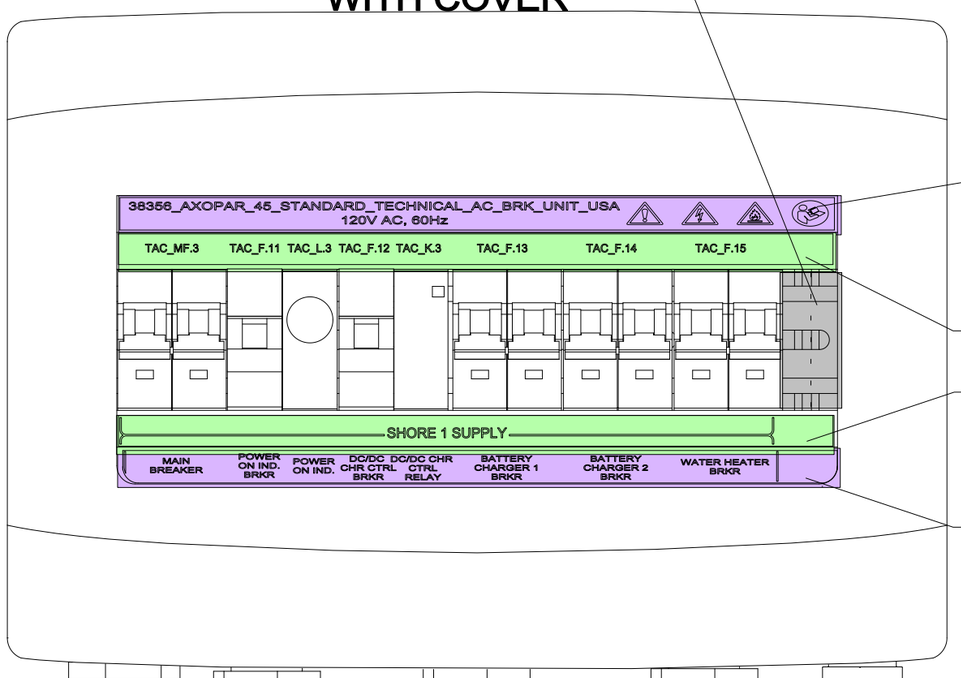

38473 LABEL 1

38473 LABEL 2

38473 LABEL 3

38473 LABEL 4

INCLUDED TO DELIVERY

1 x



34599_NAVIX_ABYC_INVERTER_CHARGER_WARNING_LABEL_V1

BUSBAR LABEL MOUNTING

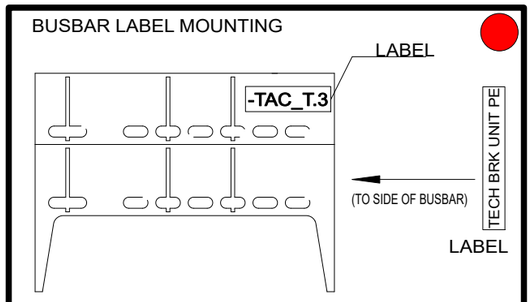

Date of modification	Modified by	Description
21.3.2023	TuM	A1: 2004274; INTRODUCED DRAWING.
28.2.2023	TuM/VR	B2: 2004274; ADDED CABLES
9.11.2023	PF	C3: 2004890; Added end clamps

Date	21.3.2023
Drawing by	TuM
Sheet rev.	3
Project rev.	C

Copyright by

Axopar	38473	38356	
Boat	Sub-product code	Product code	Project ID
45	STANDARD TECHNICAL AC BRK UNIT - USA	HL	332 / 444
Boat model	Title	Loc	Sheet

-SH_X.30#1

L TAC_SUPPLY_L -TAC_MF3a:1

N TAC_SUPPLY_N -TAC_MF3b:3

PE TAC_SUPPLY_PE -TAC_T3a:1

35779

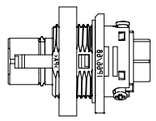

(MALE)

35779
-SH_X.30#1

/334.B3

UL1426 GREEN

250 mm
250 mm
250 mm

-TAC_MF3a#1 TAC_SUPPLY_L -SH_X.30:L UL1426 BLACK
-TAC_MF3b#1 TAC_SUPPLY_N -SH_X.30:N UL1426 WHITE

-TAC_MF.3
C15A
38417
2005:2 -A238

-TAC_MF3c#1 -TAC_F11a:1, -TAC_F13a:1 TAC_MAIN_L AWG12 UL1426 BLACK 30 mm
-TAC_MF3d#1 -TAC_F11b:3, -TAC_F13b:3 TAC_MAIN_N AWG12 UL1426 WHITE 30 mm

210 mm

-TAC_F11a#1 TAC_MAIN_L -TAC_MF3c:2 AWG12 UL1426 BLACK 30 mm
-TAC_F11b#1 TAC_MAIN_N -TAC_MF3d:4 AWG12 UL1426 WHITE 30 mm

18242 -TAC_F.11
6A

-TAC_F11c#1 -TAC_L3a:1 TAC_P_IND_L AWG16 UL1426 BLACK 30 mm
-TAC_F11d#1 -TAC_L3b:2 TAC_P_IND_N AWG16 UL1426 WHITE 30 mm

190 mm

-TAC_L3a#1 TAC_P_IND_L -TAC_F11c:2 AWG16 UL1426 BLACK 30 mm
-TAC_L3b#1 TAC_P_IND_N -TAC_F11d:4 AWG16 UL1426 WHITE 30 mm

34541 -TAC_L.3

-TAC_F12a#1 TAC_MAIN_L -TAC_F15a:1 AWG12 UL1426 BLACK 30 mm
-TAC_F12b#1 TAC_MAIN_N -TAC_F15b:3 AWG12 UL1426 WHITE 30 mm

18242 -TAC_F.12
6A

250 mm

-TAC_K3a#1 DC/DC_CH_CT_L -TAC_F12c:2 AWG16 UL1426 BLACK
-TAC_K3c#1 CHR_DISCNN_REL+ -TAC_X1-3dc:1 1.5 RED

-TAC_K.3
26301

-TAC_F12c#1 -TAC_K3a:A1 DC/DC_CH_CT_L AWG16 UL1426 BLACK
-TAC_F12d#1 -TAC_K3b:A2 DC/DC_CH_CT_N AWG16 UL1426 WHITE

100 mm

-TAC_K3b#1 DC/DC_CH_CT_N -TAC_F12d:4 AWG16 UL1426 WHITE
-TAC_K3d#1 CHR_DISCNN+ -TAC_X1-3dc:2 1.5 RED

120 mm

-TAC_F13a#1 TAC_MAIN_L -TAC_F14a:1, -TAC_MF3c:2 AWG12 UL1426 BLACK 30 mm
-TAC_F13b#1 TAC_MAIN_N -TAC_MF3d:4, -TAC_F14b:3 AWG12 UL1426 WHITE 30 mm

AWG12 UL1426 BLACK 110 mm
AWG12 UL1426 WHITE 110 mm

-TAC_F.13
C5A
38420

-TAC_F14a#1 TAC_MAIN_L -TAC_F13a:1, -TAC_F15a:1 AWG12 UL1426 BLACK 30 mm
-TAC_F14b#1 TAC_MAIN_N -TAC_F15b:3, -TAC_F13b:3 AWG12 UL1426 WHITE 30 mm

AWG12 UL1426 BLACK 110 mm
AWG12 UL1426 WHITE 110 mm

-TAC_F.14
C5A
38420

350 mm

-TAC_F15a#1 TAC_MAIN_L -TAC_F14a:1, -TAC_F12a:1 AWG12 UL1426 BLACK 30 mm
-TAC_F15b#1 TAC_MAIN_N -TAC_F14b:3, -TAC_F12b:3 AWG12 UL1426 WHITE 30 mm

-TAC_F.15
C10A
38416
2005:2 -A239

LABEL
12VDC

27041
320 mm
NW7.5 PP-MOD BLACK

-TAC_F13c#1 -SH_X31:L BATT_CHR_1_L
-TAC_F13d#1 -SH_X31:N BATT_CHR_1_N

-TAC_F14c#1 -SH_X32:L BATT_CHR_2_L
-TAC_F14d#1 -SH_X32:N BATT_CHR_2_N

-TAC_F15c#1 -SH_X33:L WATER_H_L
-TAC_F15d#1 -SH_X33:N WATER_H_N

/334.C3
/334.C3
/334.C4
/334.C4
/334.C6
/334.C6

27041
200 mm
NW7.5 PP-MOD BLACK

230 mm

12Vdc WIRING

80 mm

PG16

LABEL
12VDC

27041
350 mm
NW7.5 PP-MOD BLACK

310 mm

PG GLAND AND CONDUIT INSTALLATION

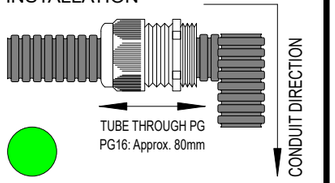

-TAC_X1-3dc#1
DT06-2S
10930002
WEDGELOCK: 10930102

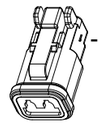

-TAC_X1-3dc#1

1 CHR_DISCNN_REL+ -TAC_K3c:3 1.5 RED
2 CHR_DISCNN+ -TAC_K3d:4 1.5 RED

DT06-2S

300 mm

21.3.2023	TuM	A1: 2004274; INTRODUCED DRAWING.	Date 21.3.2023	NAVIX	Axopar	38473	38356
28.2.2023	TuM/VR	B2: 2004274; ADDED CABLES	Drawing by TuM		Boat	Sub-product code	Product code
9.11.2023	PF	C3: 2004890; Added end clamps	Sheet rev. 3		45	STANDARD TECHNICAL	HL
Date of modification	Modified by	Description	Project rev. C	Copyright by	Boat model	AC BRK UNIT - USA	333 / 444
						Title	Loc Sheet

Project ID

ENCLOSURE TOP

-TAC_T.3
28717
TECH BRK UNIT PE

-TAC_T3a#1
-SH_X30:PE TAC_SUPPLY_PE

-TAC_T3c#1
-SH_X31:PE BATT_CHR_1_PE

-TAC_T3d#1
-SH_X32:PE BATT_CHR_2_PE

-TAC_T3e#1
-SH_X33:PE WATER_H_PE

/333.A3

ENCLOSURE BOTTOM

/333.E5
/333.E5
150 mm
150 mm
200 mm
UL1426 BLACK
UL1426 WHITE
UL1426 GREEN
-TAC_F13c:2 BATT_CHR_1_L
-TAC_F13d:4 BATT_CHR_1_N
-TAC_T3c:1 BATT_CHR_1_PE

/333.E6
/333.E6
100 mm
100 mm
180 mm
UL1426 BLACK
UL1426 WHITE
UL1426 GREEN
-TAC_F14c:2 BATT_CHR_2_L
-TAC_F14d:4 BATT_CHR_2_N
-TAC_T3d:1 BATT_CHR_2_PE

/333.E7
/333.E7
80 mm
80 mm
200 mm
UL1426 BLACK
UL1426 WHITE
UL1426 GREEN
-TAC_F15c:2 WATER_H_L
-TAC_F15d:4 WATER_H_N
-TAC_T3e:1 WATER_H_PE

-SH_X31#1
35778
(FEMALE)

-SH_X31#1
L
N
PE
35778

-SH_X32#1
35778
(FEMALE)

-SH_X32#1
L
N
PE
35778

-SH_X33#1
35778
(FEMALE)

-SH_X33#1
L
N
PE
35778

21.3.2023	TuM	A1: 2004274; INTRODUCED DRAWING.	Date	21.3.2023	NAVIX	Axopar	38473	38356	
28.2.2023	TuM/VR	B2: 2004274; ADDED CABLES	Drawing by	TuM		Boat	Sub-product code	Product code	Project ID
9.11.2023	PF	C3: 2004890; Added end clamps	Sheet rev.	3		45	STANDARD TECHNICAL	HL	334 / 444
Date of modification	Modified by	Description	Project rev.	C	Copyright by	Boat model	AC BRK UNIT - USA Title	Loc	Sheet

USA SPC INSPECTION SHEET

PRODUCT LABEL

* DDMMYY-RUNNING NUMBER (For example. 11th March 2019 made product has serial number 110319-01, next is 110319-02 etc.)

	SERIAL NUMBER*						
VISUAL/ MANUAL	1. PERFORM FULL SYSTEM TEST -LABEL IN PLACE						
	2. CORRECT COMPONENTS AND CONNECTIONS						
	3. GROUND CONNECTION IN AND OUT						
	4. RCBO AND CIRCUIT BREAKERS IN I-POSITION						
TESTER	5. ISOLATION RESISTANCE (mA) max **						
	6. GROUND CIRCUIT 10A (Ohm) max **						
	7. RCD TEST, (ms @30mA) max						
	8. POLARITY TEST, PASS or FAIL **						
115Vac VOLTAGE LIVE	9. FUNCTIONAL AND RCD*** TEST, PASS or FAIL						
	SERIAL NUMBER STICKER						
	DATE						
	TESTED BY						

Made according to CENELEC EN 50106:2008 WITH ADDITION OF (8) POLARITY TEST AND (9) 115Vac FUNCTIONAL AND RCD TEST

** (5) ISOLATION RESISTANCE, (6) GROUND CIRCUIT AND (8) POLARITY TEST SHOULD BE TESTED FOR EVERY IN AND OUT

*** (9) RDC TEST-BUTTON OPERATION VERIFICATION

LIMITS:

ISOLATING RESISTOR 1000V = <5mA

GROUND CIRCUIT 10A = <0,2 Ohm

RDC TEST, Time <100mS @30mA

REVISION B

Date of modification	Modified by	Description
21.3.2023	TuM	A1: 2004274; INTRODUCED DRAWING.
28.2.2023	TuM/VR	B2: 2004274; ADDED CABLES
9.11.2023	PF	C3: 2004890; Added end clamps

Date	21.3.2023
Drawing by	TuM
Sheet rev.	3
Project rev.	C

Copyright by NAVIX

Axopar (Boat)	38473 (Sub-product code)	38356 (Product code)	Project ID
45 (Boat model)	STANDARD TECHNICAL AC BRK UNIT - USA (Title)	HL / Loc	335 / 444 (Sheet)

GENERAL LAYOUT

38357 Axopar 45 ZERO EMISSION 120VAC SYSTEM - USA

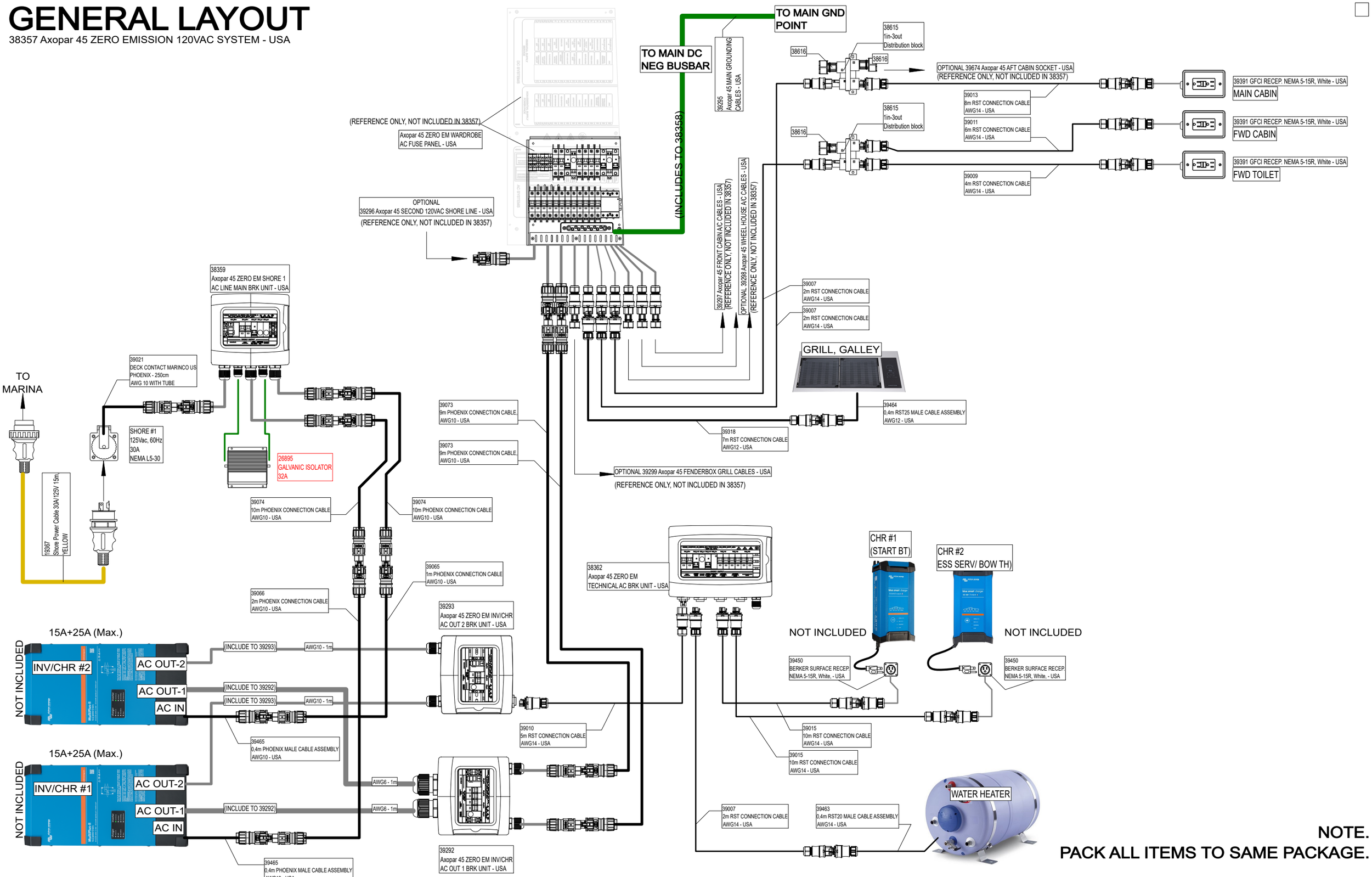

NOTE.
PACK ALL ITEMS TO SAME PACKAGE.

Date of modification	Modified by	Description
6.4.2023	TuM	A1: 2004274; INTRODUCED DRAWING.
21.8.2023	TuM	B2: 2004274; SYSTEM STRUCTURE ADDED
28.5.2024	TuM	C3: 2005065: Galvanic isolator changed 30A -->32A.

Date	21.8.2023
Drawing by	TuM
Sheet rev.	3
Project rev.	C

NAVIX

Copyright by

Axopar		38357	
Boat	Sub-product code	Product code	Project ID
45	ZERO EMISSION 120VAC SYSTEM - USA	HL	336 / 444
Boat model	Title	Loc	Sheet

GENERAL LAYOUT/ LABEL INSTALLATION

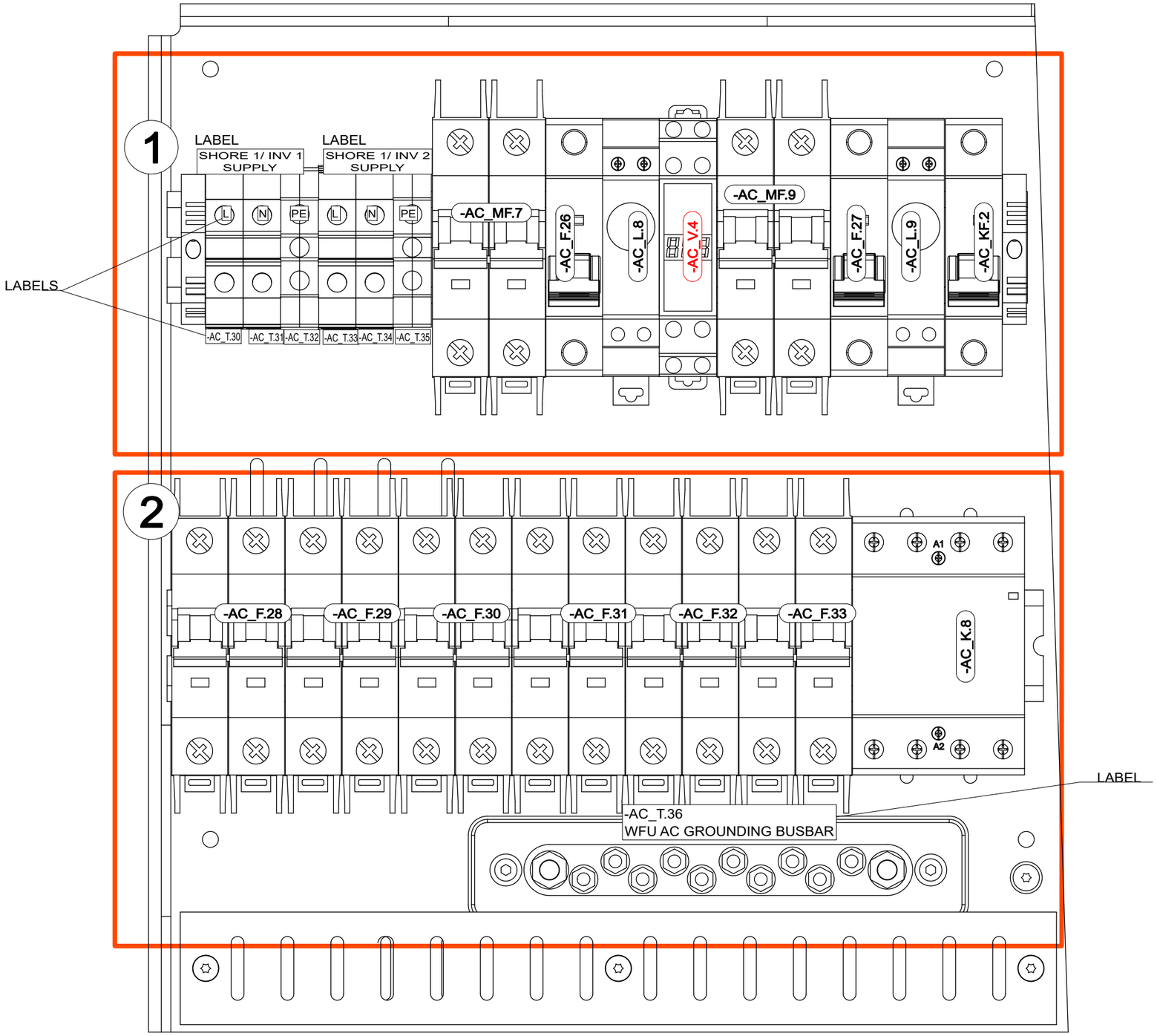

Date of modification	Modified by	Description
28.3.2023	TuM	A1: 2004274; INTRODUCED DRAWING.
14.8.2023	TuM/VR	B2: 2004274; ADDED CABLING
30.5.2024	TuM	C3: 2005065; Voltage meter, AC_V4 added, MF_8 removed, contactor 40->63A, SH12INV FD wires AWG10->8

Date 28.3.2023
Drawing by TuM
Sheet rev. 1
Project rev. C

Copyright by NAVIX

Boat	Sub-product code	Product code	Project ID
Axopar	SEE EXP VIEW	38358	
Boat model	Title	HL	Sheet
45	ZERO EM WARDROBE AC FUSE PANEL - USA	Loc	337 / 444

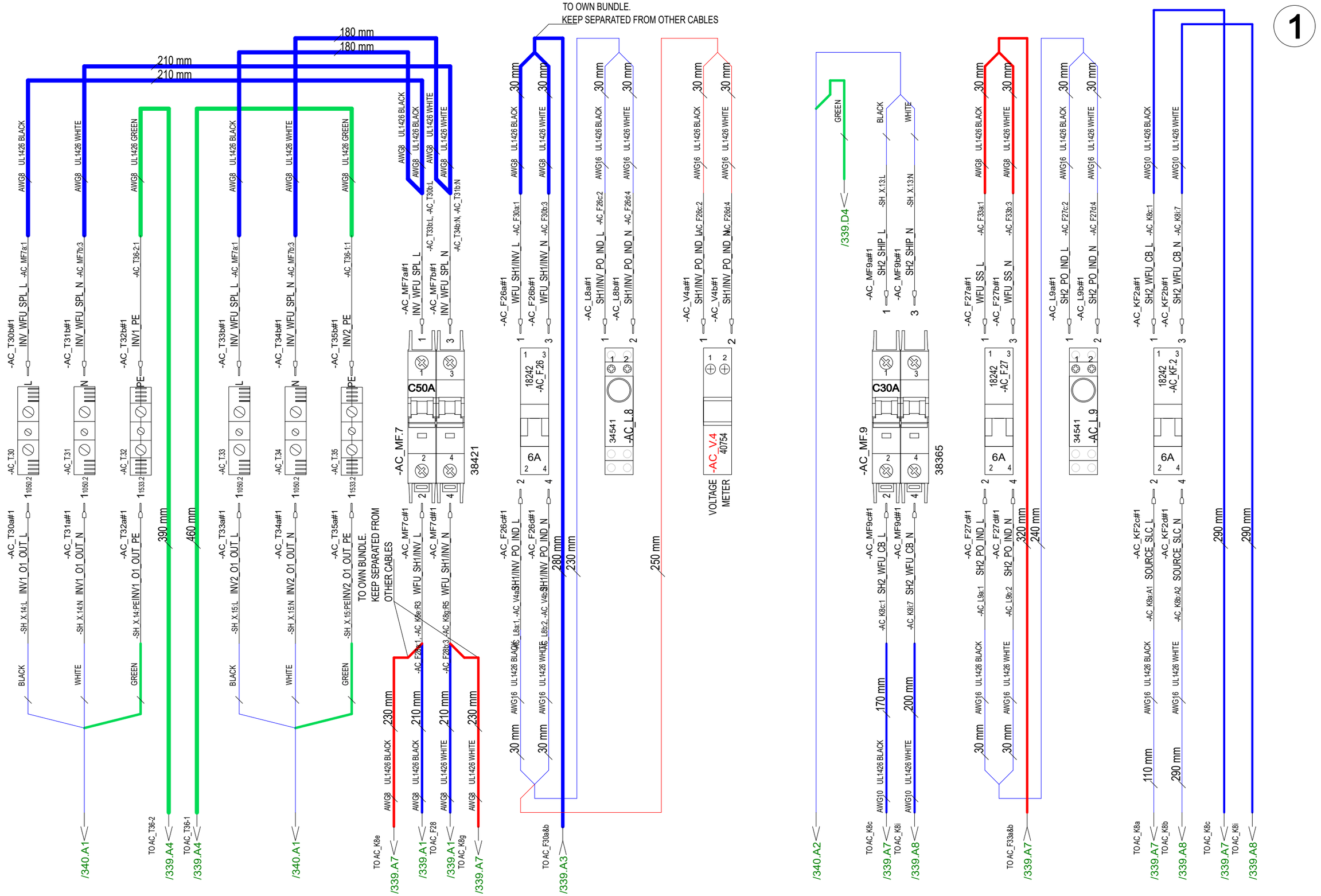

Date of modification	Modified by	Description
28.3.2023	TuM	A1: 2004274; INTRODUCED DRAWING.
14.8.2023	TuM/VR	B2: 2004274; ADDED CABLING
30.5.2024	TuM	C3: 2005065; Voltage meter, AC_V4 added, MF_8 removed, contactor 40->63A, SH13 INV FD wires AWG16->8

Date 28.3.2023
Drawing by TuM
Checked by
Project rev. C

NAVIX
Copyright by

Axopar
Boat
45
Boat model

SEE EXP VIEW
Sub-product code
38358
Product code
Project ID

ZERO EM WARDROBE
AC FUSE PANEL - USA
Title
HL
Loc
338 / 444
Sheet

TO OWN BUNDLE.
KEEP SEPARATED FROM
OTHER CABLES

/338.F3
/338.F4
/338.F2
/338.F7
/338.F6
/338.F8
/338.F3
/338.F7
/338.F4
/338.F8
/338.F6
/338.F8

2

AWG8 UL1426 BLACK
AWG8 UL1426 WHITE
100 mm
30 mm
110 mm
390 mm
380 mm
90 mm

-AC_F28a#1 WFU_SH1/INV_L -AC_F28a:1, -AC_MF7c:2
-AC_F28b#1 WFU_SH1/INV_N -AC_MF7d:4, -AC_F29b:3
-AC_F29a#1 WFU_SH1/INV_L -AC_F30a:1, -AC_F28a:3
-AC_F29b#1 WFU_SH1/INV_N -AC_F30b:3, -AC_F28b:3
-AC_F30a#1 WFU_SH1/INV_L -AC_F26a:1, -AC_F29a:1
-AC_F30b#1 WFU_SH1/INV_N -AC_F26b:3, -AC_F29b:3
-AC_F31a#1 WFU_SS_L -AC_F32a:1, -AC_K8fR4
-AC_F31b#1 WFU_SS_N -AC_F32b:3, -AC_K8hR6
-AC_F32a#1 WFU_SS_L -AC_F31a:1, -AC_F33a:1
-AC_F32b#1 WFU_SS_N -AC_F31b:3, -AC_F33b:3
-AC_F33a#1 WFU_SS_L -AC_F27a:1, -AC_F32a:1
-AC_F33b#1 WFU_SS_N -AC_F27b:3, -AC_F32b:3

C20A
C15A

-AC_F.28 38418
-AC_F.29 38417
-AC_F.30 38417
-AC_F.31 38418
-AC_F.32 38418
-AC_F.33 38418

-AC_F28c#1 EL_GRILL_L -SH_X16:L, -SH_X17:L
-AC_F28d#1 EL_GRILL_N -SH_X16:N, -SH_X17:N
-AC_F29c#1 ACCOM_OUTLET_L -SH_X18:L
-AC_F29d#1 ACCOM_OUTLET_N -SH_X18:N
-AC_F30c#1 TOILWETB_OUTLET_L -SH_X19:L
-AC_F30d#1 TOILWETB_OUTLET_N -SH_X19:N
-AC_F31c#1 A/C_U1_L -SH_X20:L
-AC_F31d#1 A/C_U1_N -SH_X20:N
-AC_F32c#1 A/C_U2_L -SH_X21:L
-AC_F32d#1 A/C_U2_N -SH_X21:N
-AC_F33c#1 A/C_U3_L -SH_X22:L
-AC_F33d#1 A/C_U3_N -SH_X22:N

BLACK
WHITE
GREEN

/339.D3
/339.D4
/339.D5
/340.A3
/340.A4
/340.A5
/340.A6

/339.E1
/339.E2
/339.E3
/339.E5
/339.E6
/338.B6
/339.E7

-AC_T36-1#1 6 INV2_PE -AC_T35b:PE
-AC_T36-10#1 10/6 EL_GRILL_PE -SH_X16:PE
-AC_T36-4#1 EL_GRILL_PE -SH_X17:PE
-AC_T36-5#1 ACCOM_OUTLET_PE -SH_X18:PE
-AC_T36-6#1 TOILWETB_OUTLET_PE -SH_X19:PE
-AC_T36-7#1 A/C_U1_PE -SH_X20:PE
-AC_T36-8#1 A/C_U2_PE -SH_X21:PE
-AC_T36-3#1 4 SH2_SHIP_PE -SH_X.13:PE
-AC_T36-9#1 A/C_U3_PE -SH_X22:PE
-AC_T36-2#1 6 INV1_PE -AC_T32b:PE 10/6

-AC_T:36
2301
28042

-AC_K.8
28870

-AC_K8c#1 SH2_WFU_CB_L -AC_KF2a:1, -AC_MF9c:2
-AC_K8e#1 WFU_SH1/INV_L -AC_MF7c:2
-AC_K8a#1 SOURCE_SLC_L -AC_KF2c:2
-AC_K8g#1 WFU_SH1/INV_N -AC_MF7d:4
-AC_K8i#1 SH2_WFU_CB_N -AC_KF2b:3, -AC_MF9d:4
-AC_K8d#1 WFU_SS_L -AC_K8fR4
-AC_K8f#1 WFU_SS_L -AC_F31a:1, -AC_K8d:2
-AC_K8b#1 SOURCE_SLC_N -AC_KF2d:4
-AC_K8h#1 WFU_SS_N -AC_K8i:8, -AC_F31b:3
-AC_K8j#1 WFU_SS_N -AC_K8hR6

AWG10 UL1426 BLACK
AWG10 UL1426 WHITE
AWG16 UL1426 BLACK
AWG16 UL1426 WHITE

28.3.2023	TuM	A1: 2004274; INTRODUCED DRAWING.	Date	28.3.2023	NAVIX	Axopar	SEE EXP VIEW	38358	
14.8.2023	TuM/VR	B2: 2004274; ADDED CABLING	Drawing by	TuM		Boat	Sub-product code	Product code	Project ID
30.5.2024	TuM	C3: 2005065; Voltage meter, AC_V4 added, MF_8 removed, contactor 40->63A, SH1/INV FD wires AWG16->8	Sheet rev.	3		45	ZERO EM WARDROBE AC FUSE PANEL - USA	HL	339 / 444
Date of modification	Modified by	Description	Project rev.	C	Copyright by	Boat model	Title	Loc	Sheet

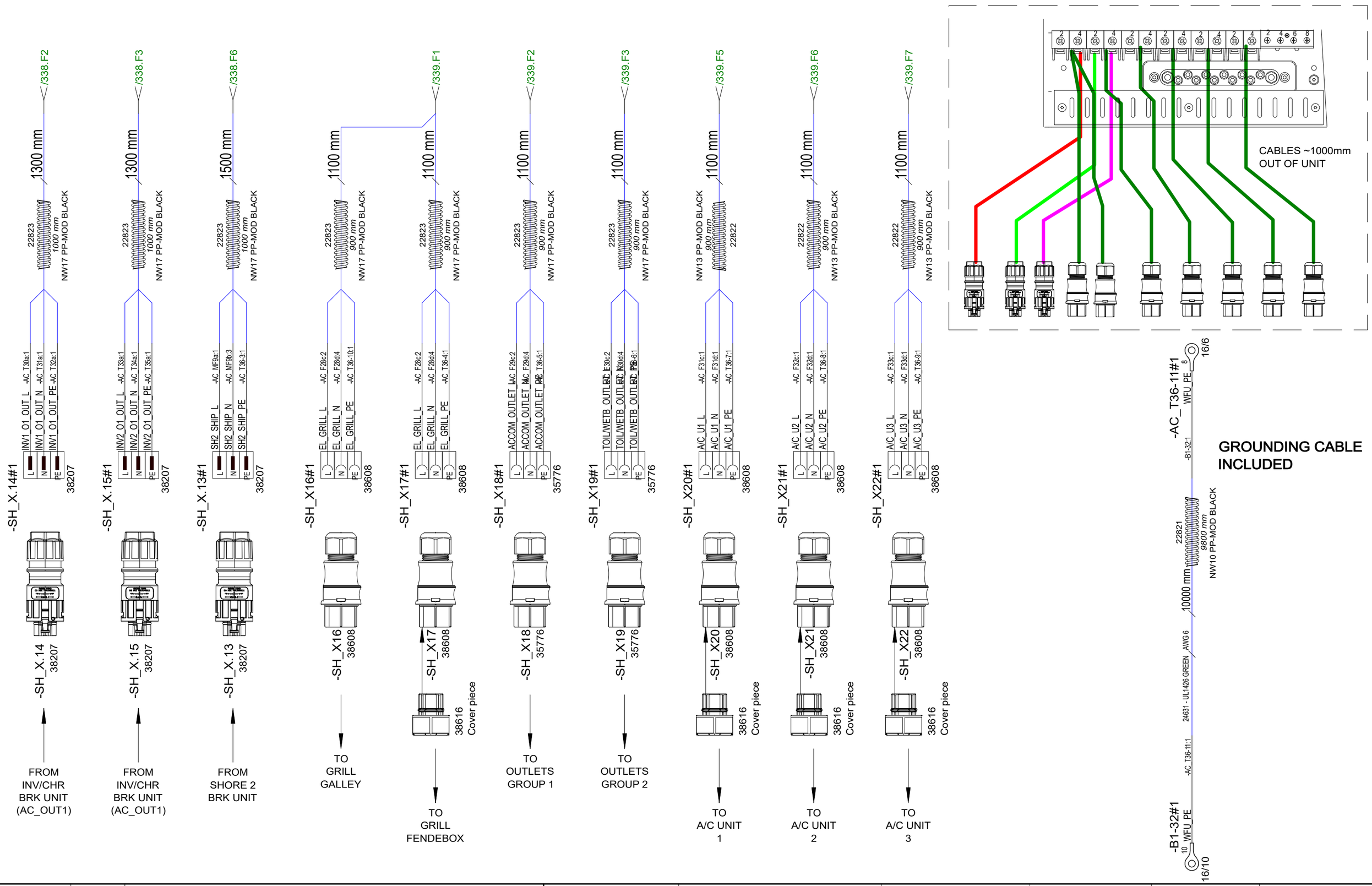

Date of modification	Modified by	Description
28.3.2023	TuM	A1: 2004274; INTRODUCED DRAWING.
14.8.2023	TuM/VR	B2: 2004274; ADDED CABLING
30.5.2024	TuM	C3: 2005065; Voltage meter, AC_V4 added, MF_8 removed, contactor 40->63A; SH12 INV FD wires AWG10->8

Date	10.8.2023
Drawing by	TuM
Sheet rev.	B
Project rev.	C

Copyright by

NAVIX

Axopar	SEE EXP VIEW	38358	
Boat	Sub-product code	Product code	Project ID
45	ZERO EM WARDROBE AC FUSE PANEL - USA	HL	340 / 444
Boat model	Title	Loc	Sheet

EXP VIEW GENERAL

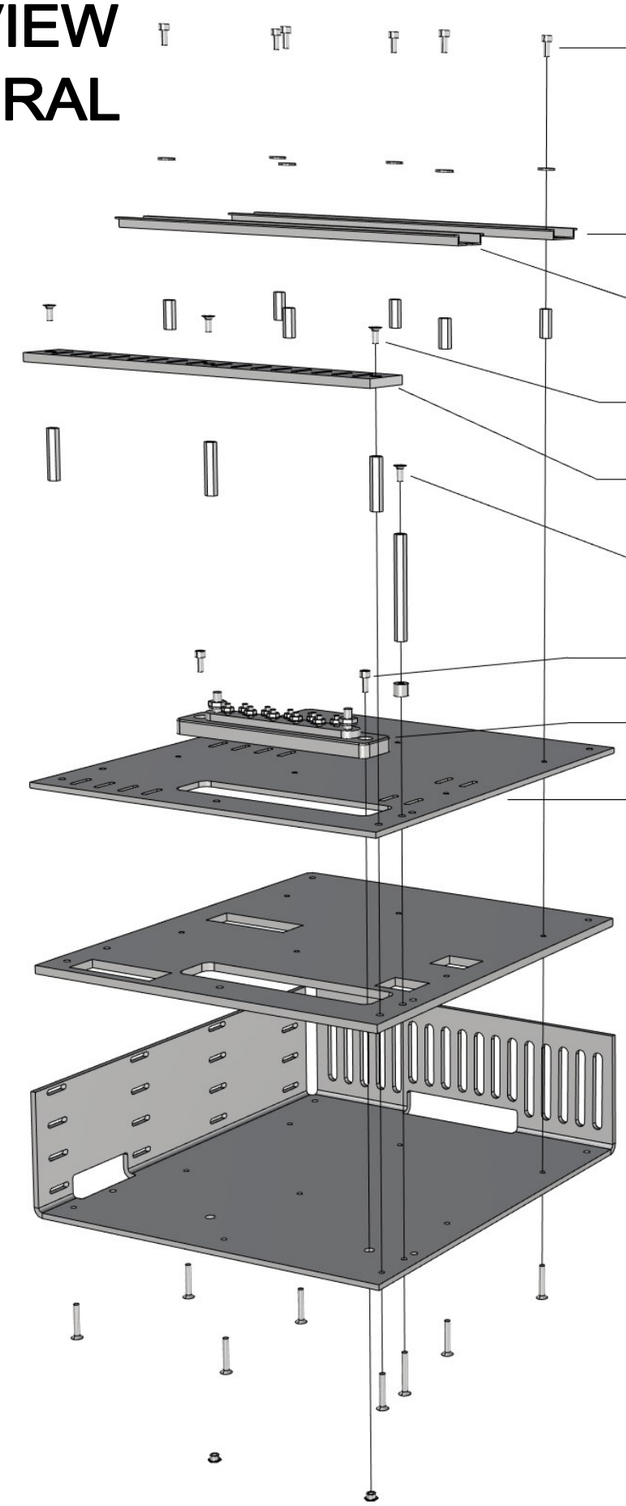

38358_AXOPAR_45_ZERO_EM_WARDROBE_AC_FUSE_PANEL_USA

1. 6PCS VMI30943 HEX SOCKET HEAD CAP SCREW M4X10 DIN912
 6PCS VMI30907 M4 WASHER WITH LARGE OUTSIDE DIAMETER 12MM DIN9021
 6PCS VMI32036 EXTENSION BOLT M4 L-20
 6PCS VMI30919 COUNTERSUNK HEAD SCREW HEX SOCKET M4X25 DIN7991

2. 1PCS DIN_RAIL_270mm

3. 1PCS DIN_RAIL_275mm

4. 3PCS VMI30914 COUNTERSUNK HEAD SCREW HEX SOCKET M4X10 DIN7991
 3PCS VMI32039 EXTENSION BOLT M4 L-35
 3PCS VMI30919 COUNTERSUNK HEAD SCREW HEX SOCKET M4X25 DIN7991

5. 1PC 36444_AXOPAR_45_ZERO_EM_WARDROBE_AC_BRK_PANEL_EU_RACK_V1

6. 1PCS 27022_BOLT_M4X10_HEX_COATED_SOFT_BLACK (TIGHTEN LOOSELY)
 1PCS VMI35429 EXTENSION BOLT M4 L-70
 1PCS 15569_NAVIX_LINE_8mm_SPACER
 1PCS VMI30920 COUNTERSUNK HEAD SCREW HEX SOCKET M4X30 DIN7991

7. 2PCS VMI30943 HEX SOCKET HEAD CAP SCREW M4X10 DIN912
 2PCS 9872 M4 X 4 ETSOS

8. 1PC 28042 - Busbar 10 Gang 150A - Blue Sea 2301

9. 1PC 36443_AXOPAR_45_ZERO_EM_WARDROBE_AC_BRK_PANEL_EU_TOP_V1

10. 1PC 36442_AXOPAR_45_ZERO_EM_WARDROBE_AC_BRK_PANEL_EU_MID_V1

11. 1PC 36441_AXOPAR_45_ZERO_EM_WARDROBE_AC_BRK_PANEL_EU_BACK_V1

01.03.2023 TS

Date of modification	Modified by	Description
28.3.2023	TuM	A1: 2004274; INTRODUCED DRAWING.
14.8.2023	TuM/VR	B2: 2004274; ADDED CABLING
30.5.2024	TuM	C3: 2005065; Voltage meter, AC_V4 added, MF_8 removed, contactor 40->63A, SH12NV FD wires AWG10->8

Date	28.3.2023
Drawing by	TuM
Checked by	
Project rev.	C

NAVIX

Copyright by

Axopar	SEE EXP VIEW	38358	
Boat	Sub-product code	Product code	Project ID
45	ZERO EM WARDROBE AC FUSE PANEL - USA	HL	341/ 444
Boat model	Title	Loc	Sheet

USA SPC INSPECTION SHEET

PRODUCT LABEL

* DDMMYY-RUNNING NUMBER (For example. 11th March 2019 made product has serial number 110319-01, next is 110319-02 etc.)

	SERIAL NUMBER*						
VISUAL/ MANUAL	1. PERFORM FULL SYSTEM TEST -LABEL IN PLACE						
	2. CORRECT COMPONENTS AND CONNECTIONS						
	3. GROUND CONNECTION IN AND OUT						
	4. RCBO AND CIRCUIT BREAKERS IN I-POSITION						
TESTER	5. ISOLATION RESISTANCE (mA) max **						
	6. GROUND CIRCUIT 10A (Ohm) max **						
	7. RCD TEST, (ms @30mA) max						
	8. POLARITY TEST, PASS or FAIL **						
115Vac VOLTAGE LIVE	9. FUNCTIONAL AND RCD*** TEST, PASS or FAIL						
	SERIAL NUMBER STICKER						
	DATE						
	TESTED BY						

Made according to CENELEC EN 50106:2008 WITH ADDITION OF (8) POLARITY TEST AND (9) 115Vac FUNCTIONAL AND RCD TEST

** (5) ISOLATION RESISTANCE, (6) GROUND CIRCUIT AND (8) POLARITY TEST SHOULD BE TESTED FOR EVERY IN AND OUT

*** (9) RDC TEST-BUTTON OPERATION VERIFICATION

LIMITS:

ISOLATING RESISTOR 1000V = <5mA

GROUND CIRCUIT 10A = <0,2 Ohm

RDC TEST, Time <100mS @30mA

REVISION B

Date of modification	Modified by	Description
28.3.2023	TuM	A1: 2004274; INTRODUCED DRAWING.
14.8.2023	TuM/VR	B2: 2004274; ADDED CABLING
30.5.2024	TuM	C3: 2005065; Voltage meter, AC_V4 added, MF_8 removed, contactor 40->63A, SH13NV FD wires AWG16->8

Date 28.3.2023
Drawing by TuM
Checked
Project rev. C

NAVIX
Copyright by

Axopar
Boat

45
Boat model

SEE EXP VIEW
Sub-product code

38358
Product code

Project ID

ZERO EM WARDROBE
AC FUSE PANEL - USA
Title

HL
Loc

342 / 444
Sheet

GENERAL LAYOUT/ LABEL INSTALLATION

WITHOUT COVER

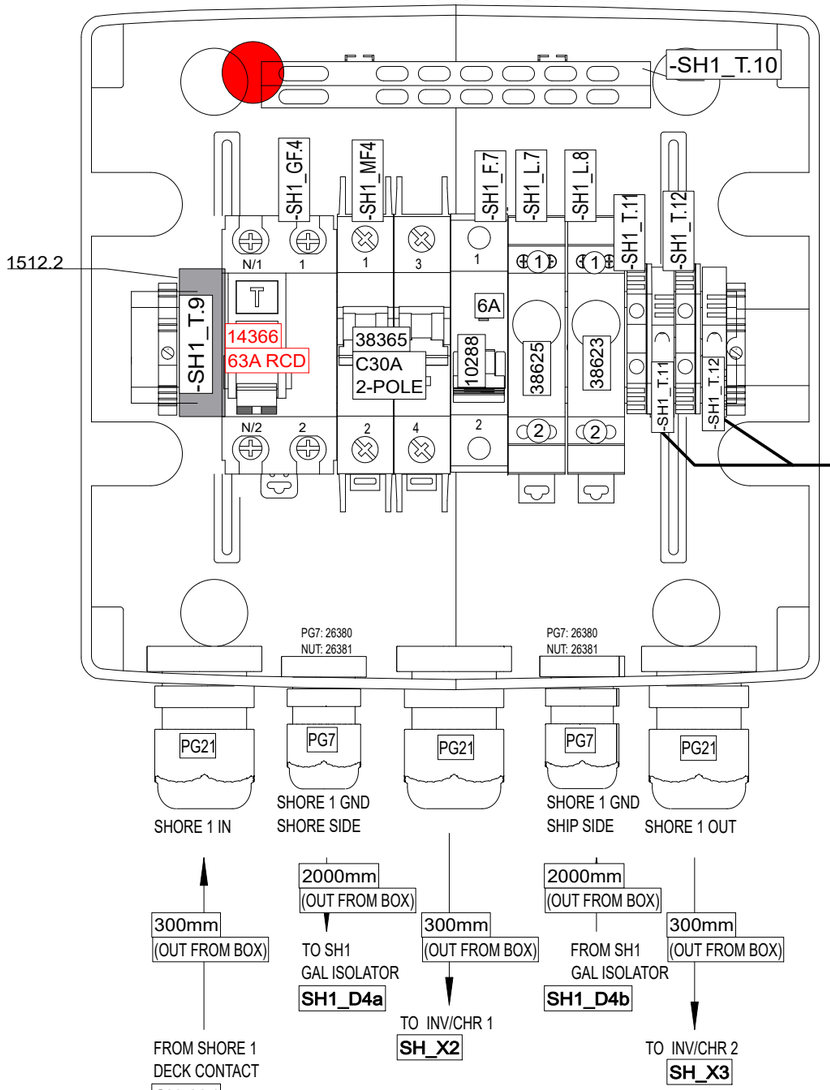

ENCLOSURE:
18113 (8-mod)

WITH COVER

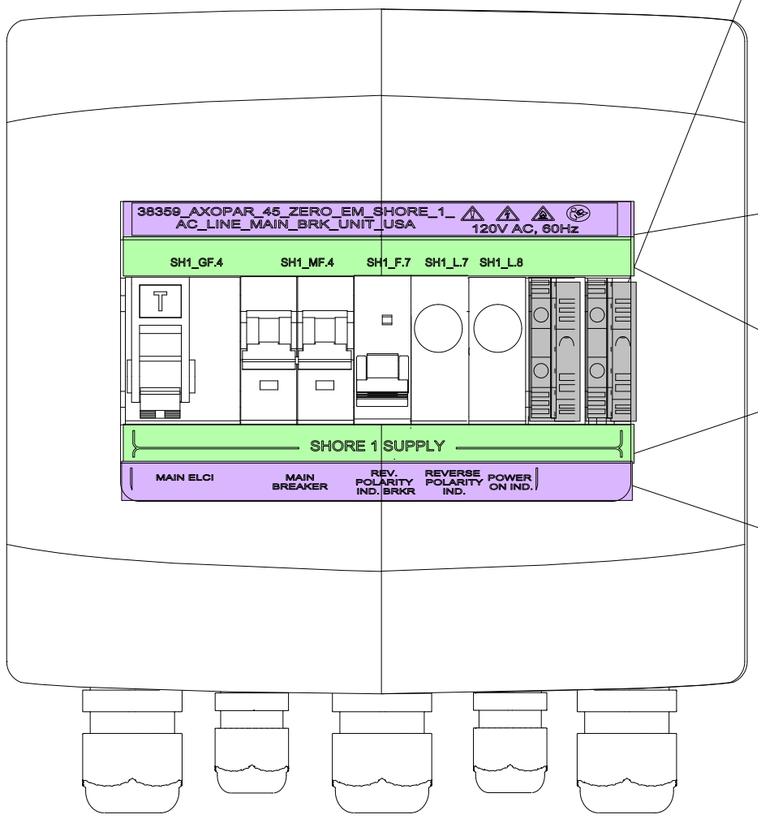

INCLUDED TO DELIVERY

1 x

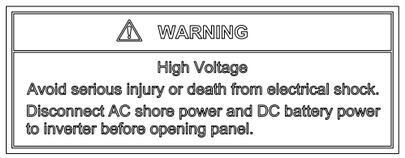

34599_NAVIX_ABYC_INVERTER_CHARGER_WARNING_LABEL_V1

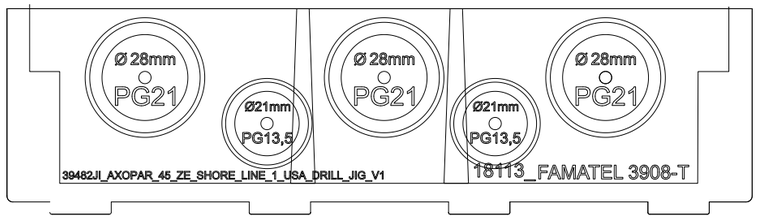

DRILL HOLES WITH 39473JI_V1 AND 39482JI_V1 AS GUIDE

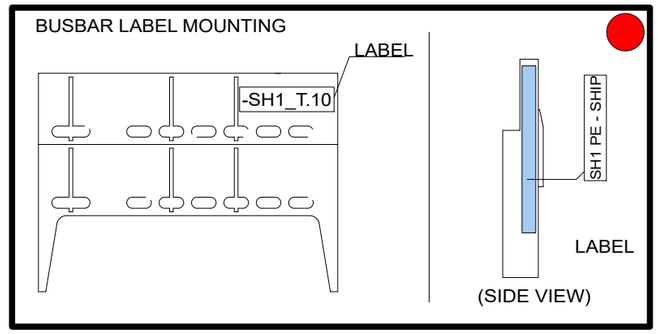

Date of modification	Modified by	Description
27.3.2023	TuM	A1: 2004274; INTRODUCED DRAWING.
14.8.2023	TuM/VR	B2: 2004274; REMOVED SH1_F.8, ADDED CABLES
9.11.2023	PF/TuM	C3: 2004890; Added end clamps, 2005065: SH1_GF4 TYPE CHANGED TO 14366 RCD.

Date	27.3.2023
Drawing by	TuM
Checked by	
Project rev.	C

NAVIX

Copyright by

Axopar	38545	38359	
Boat	Sub-product code	Product code	Project ID
45	ZERO EM SHORE 1 AC LINE MAIN BRK UNIT - USA		
Boat model	Title	Loc	Sheet 343 / 444

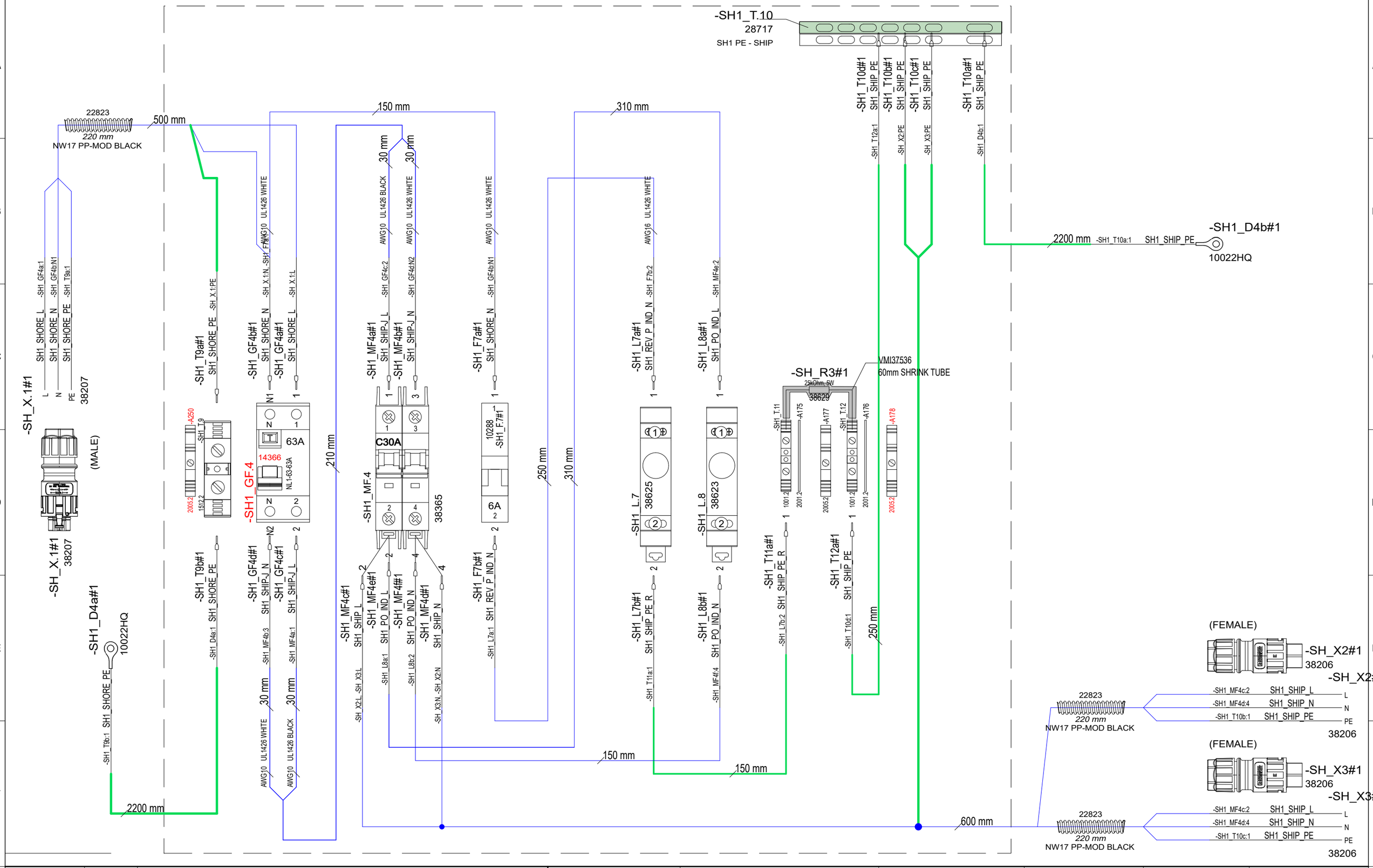

Date of modification	Modified by	Description
27.3.2023	TuM	A1: 2004274; INTRODUCED DRAWING.
14.8.2023	TuM/VR	B2: 2004274; REMOVED SH1_F.8, ADDED CABLES
9.11.2023	PF/TuM	C3: 2004890; Added end clamps, 2005065: SH1_GF4 TYPE CHANGED TO 14366 PCD.

Date	27.3.2023
Drawing by	TuM
Sheet size	A3
Project rev.	C

Copyright by NAVIX

Axopar Boat	38545 Sub-product code	38359 Product code	Project ID
45 Boat model	ZERO EM SHORE 1 AC LINE MAIN BRK UNIT - USA Title	HL Loc	344 / 444 Sheet

USA SPC INSPECTION SHEET

PRODUCT LABEL

* DDMMYY-RUNNING NUMBER (For example. 11th March 2019 made product has serial number 110319-01, next is 110319-02 etc.)

	SERIAL NUMBER*						
VISUAL/ MANUAL	1. PERFORM FULL SYSTEM TEST -LABEL IN PLACE						
	2. CORRECT COMPONENTS AND CONNECTIONS						
	3. GROUND CONNECTION IN AND OUT						
	4. RCBO AND CIRCUIT BREAKERS IN I-POSITION						
TESTER	5. ISOLATION RESISTANCE (mA) max **						
	6. GROUND CIRCUIT 10A (Ohm) max **						
	7. RCD TEST, (ms @30mA) max						
	8. POLARITY TEST, PASS or FAIL **						
115Vac VOLTAGE LIVE	9. FUNCTIONAL AND RCD*** TEST, PASS or FAIL						
	SERIAL NUMBER STICKER						
	DATE						
	TESTED BY						

Made according to CENELEC EN 50106:2008 WITH ADDITION OF (8) POLARITY TEST AND (9) 115Vac FUNCTIONAL AND RCD TEST

** (5) ISOLATION RESISTANCE, (6) GROUND CIRCUIT AND (8) POLARITY TEST SHOULD BE TESTED FOR EVERY IN AND OUT

*** (9) RDC TEST-BUTTON OPERATION VERIFICATION

LIMITS:

ISOLATING RESISTOR 1000V = <5mA

GROUND CIRCUIT 10A = <0,2 Ohm

RDC TEST, Time <100mS @30mA

REVISION B

Date of modification	Modified by	Description
27.3.2023	TuM	A1: 2004274; INTRODUCED DRAWING.
14.8.2023	TuM/VR	B2: 2004274; REMOVED SH1_F.8, ADDED CABLES
9.11.2023	PF/TuM	C3: 2004890; Added end clamps, 2005065: SH1_GF4 TYPE CHANGED TO 14366 RCD.

Date 27.3.2023
Drawing by TuM
Sheet size A3
Project rev. C

Copyright by NAVIX

Axopar
Boat

45
Boat model

38545
Sub-product code

38359
Product code

Project ID

ZERO EM SHORE 1 AC LINE MAIN BRK UNIT - USA
Title

HL
Loc

345 / 444
Sheet

GENERAL LAYOUT/ LABEL INSTALLATION

WITHOUT COVER

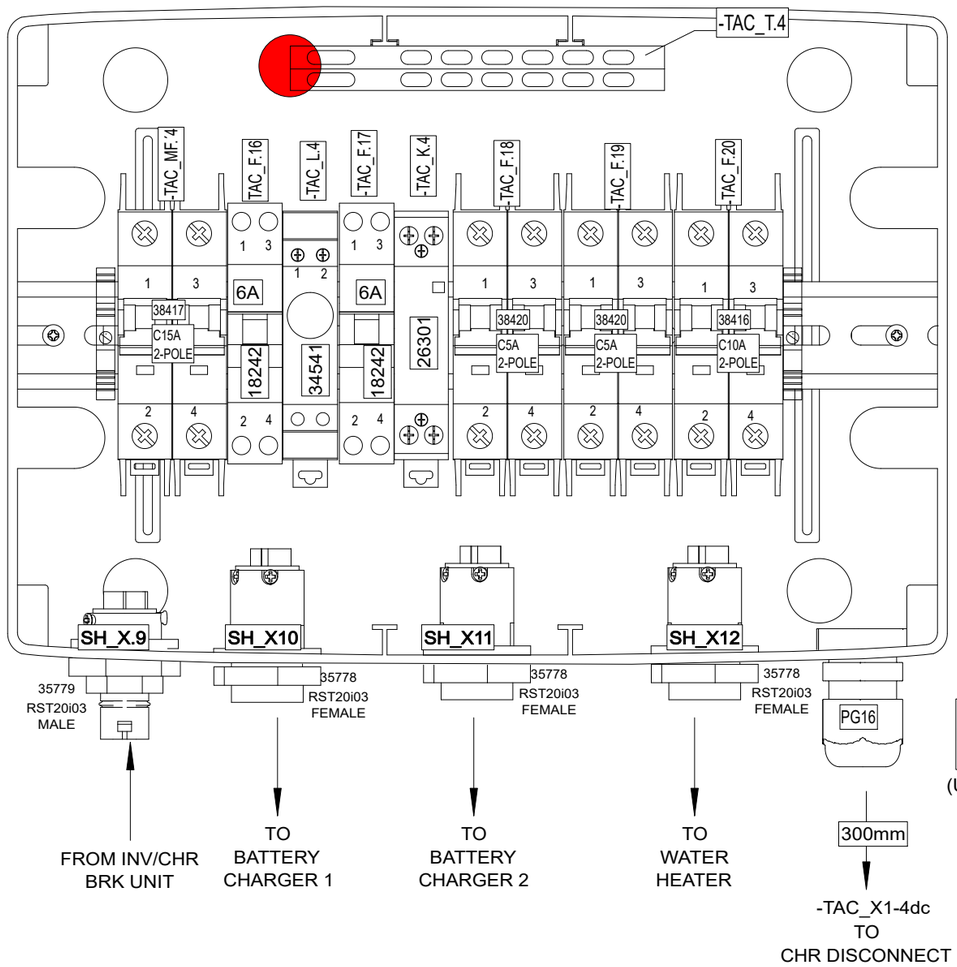

ENCLOSURE:
18114 (12-mod)

LABEL
12VDC
DC/DC CHARGER
CONTROL
(UNDER PG GLAND)

LEAVE BOX OWN COVER PLATE

WITH COVER

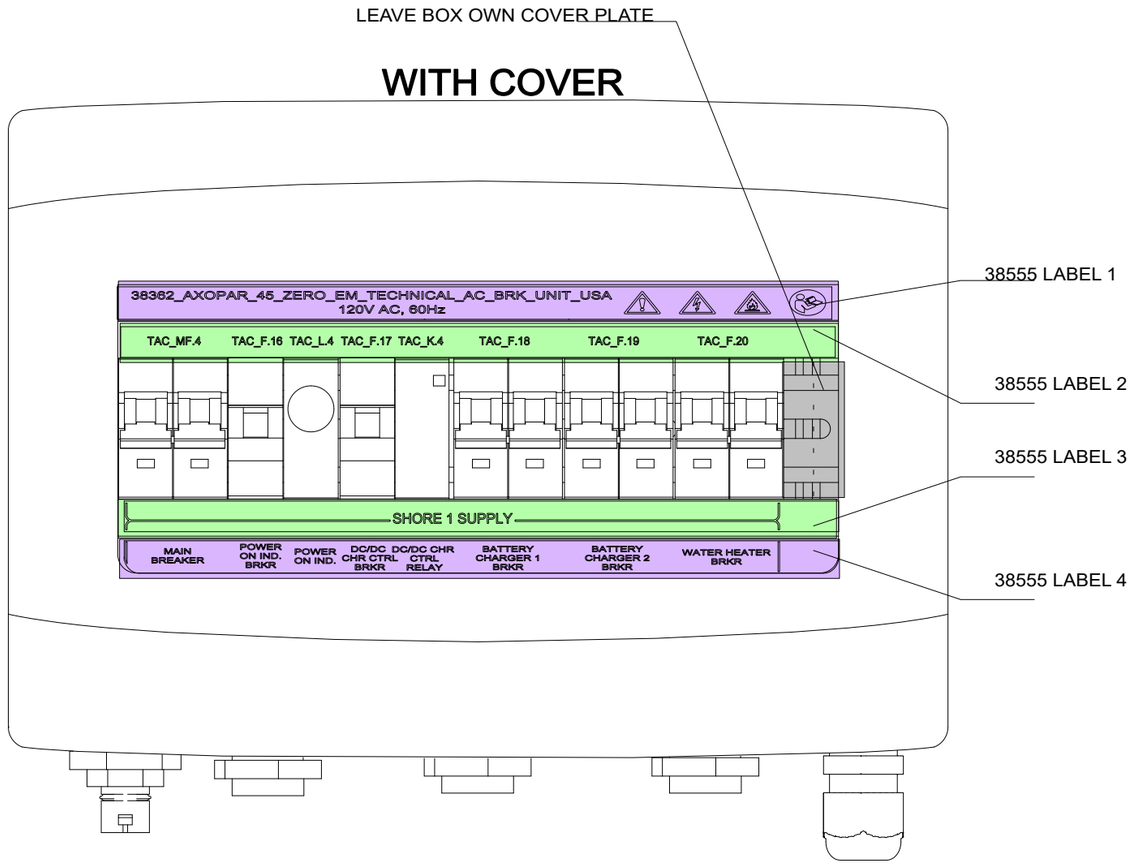

INCLUDED TO DELIVERY

1 x

⚠ WARNING

High Voltage

Avoid serious injury or death from electrical shock.
Disconnect AC shore power and DC battery power to inverter before opening panel.

34599_NAVIX_ABYC_INVERTER_CHARGER_WARNING_LABEL_V1

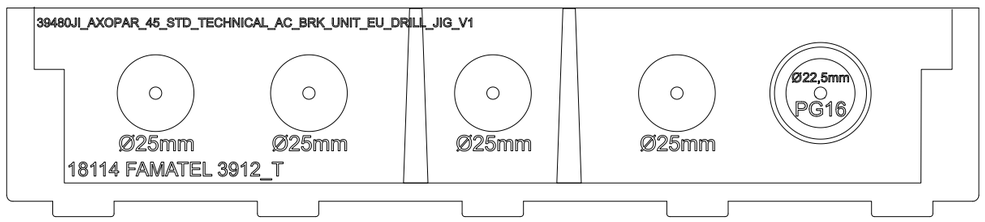

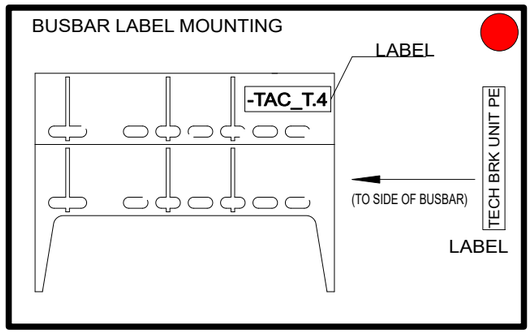

DRILL HOLES WITH 39478JI_V1 AND 39480JI_V1 AS GUIDE

Date of modification	Modified by	Description
28.3.2023	TuM	A1: 2004274; INTRODUCED DRAWING.
15.8.2023	TuM/VR	B2: 2004274; ADDED CABLING
9.11.2023	PF	C3: 2004890; Added end clamps

Date	28.3.2023
Drawing by	TuM
Sheet rev.	3
Project rev.	C

NAVIX

Copyright by

Axopar	38555	38362	
Boat	Sub-product code	Product code	Project ID
45	ZERO EM TECHNICAL AC BRK UNIT - USA	HL	346 / 444
Boat model	Title	Loc	Sheet

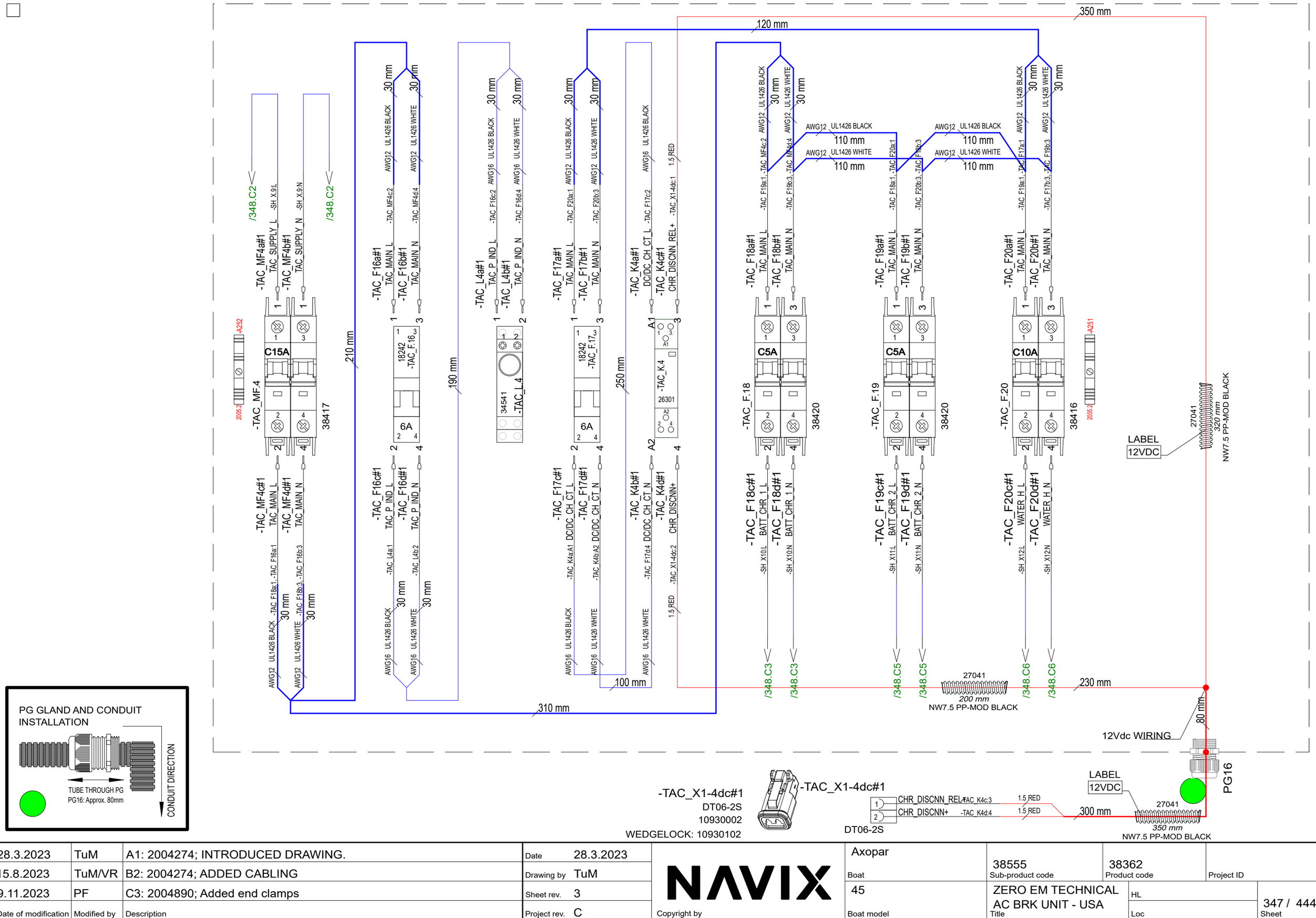

28.3.2023	TuM	A1: 2004274; INTRODUCED DRAWING.	Date	28.3.2023	NAVIX	Axopar	38555 / 38362 / Project ID
15.8.2023	TuM/VR	B2: 2004274; ADDED CABLING	Drawing by	TuM		Boat	Sub-product code / Product code
9.11.2023	PF	C3: 2004890; Added end clamps	Sheet rev.	3		45	ZERO EM TECHNICAL AC BRK UNIT - USA / HL
Date of modification	Modified by	Description	Project rev.	C	Copyright by	Boat model	Title / Loc / 347 / 444 Sheet

ENCLOSURE TOP

ENCLOSURE BOTTOM

TECH BRK UNIT PE
28717
-TAC_T.4

-TAC_T4a#1
-SH X.9:PE TAC_SUPPLY_PE

-TAC_T4c#1
-SH X10:PE BATT_CHR_1_PE

-TAC_T4d#1
-SH X11:PE BATT_CHR_2_PE

-TAC_T4e#1
-SH X12:PE WATER_H_PE

/347.B2 /347.B2
250 mm 250 mm 250 mm

/347.E5 /347.E5
130 mm 130 mm 230 mm

/347.E6 /347.E6
90 mm 90 mm 180 mm

/347.E7 /347.E7
80 mm 80 mm 200 mm

-SH_X.9
35779

-SH_X.9#1
-TAC_MF4a:1 TAC_SUPPLY_L
-TAC_MF4b:1 TAC_SUPPLY_N
-TAC_T4e:1 TAC_SUPPLY_PE
L N PE
35779

-SH_X10#1
35778

-SH_X10#1
-TAC_F18c:2 BATT_CHR_1_L
-TAC_F18d:4 BATT_CHR_1_N
-TAC_T4c:1 BATT_CHR_1_PE
L N PE
35778

-SH_X11#1
35778

-SH_X11#1
-TAC_F19c:2 BATT_CHR_2_L
-TAC_F19d:4 BATT_CHR_2_N
-TAC_T4d:1 BATT_CHR_2_PE
L N PE
35778

-SH_X12
35778

-SH_X12#1
-TAC_F20c:2 WATER_H_L
-TAC_F20d:4 WATER_H_N
-TAC_T4e:1 WATER_H_PE
L N PE
35778

			Date	15.8.2023	NAVIX	Axopar			
15.8.2023	TuM/VR	B2: 2004274; ADDED CABLING	Drawing by	TuM		Boat	38555 Sub-product code	38362 Product code	Project ID
9.11.2023	PF	C3: 2004890; Added end clamps	Sheet rev.	3		45	ZERO EM TECHNICAL AC BRK UNIT - USA	HL	348 / 444
Date of modification	Modified by	Description	Project rev.	C	Copyright by	Boat model	Title	Loc	Sheet

USA SPC INSPECTION SHEET

PRODUCT LABEL

* DDMMYY-RUNNING NUMBER (For example. 11th March 2019 made product has serial number 110319-01, next is 110319-02 etc.)

	SERIAL NUMBER*						
VISUAL/ MANUAL	1. PERFORM FULL SYSTEM TEST -LABEL IN PLACE						
	2. CORRECT COMPONENTS AND CONNECTIONS						
	3. GROUND CONNECTION IN AND OUT						
	4. RCBO AND CIRCUIT BREAKERS IN I-POSITION						
TESTER	5. ISOLATION RESISTANCE (mA) max **						
	6. GROUND CIRCUIT 10A (Ohm) max **						
	7. RCD TEST, (ms @30mA) max						
	8. POLARITY TEST, PASS or FAIL **						
115Vac VOLTAGE LIVE	9. FUNCTIONAL AND RCD*** TEST, PASS or FAIL						
	SERIAL NUMBER STICKER						
	DATE						
	TESTED BY						

Made according to CENELEC EN 50106:2008 WITH ADDITION OF (8) POLARITY TEST AND (9) 115Vac FUNCTIONAL AND RCD TEST

** (5) ISOLATION RESISTANCE, (6) GROUND CIRCUIT AND (8) POLARITY TEST SHOULD BE TESTED FOR EVERY IN AND OUT

*** (9) RDC TEST-BUTTON OPERATION VERIFICATION

LIMITS:

ISOLATING RESISTOR 1000V = <5mA

GROUND CIRCUIT 10A = <0,2 Ohm

RDC TEST, Time <100mS @30mA

REVISION B

Date of modification	Modified by	Description
28.3.2023	TuM	A1: 2004274; INTRODUCED DRAWING.
15.8.2023	TuM/VR	B2: 2004274; ADDED CABLING
9.11.2023	PF	C3: 2004890; Added end clamps

Date	28.3.2023
Drawing by	TuM
Sheet rev.	3
Project rev.	C

Copyright by NAVIX

Axopar (Boat)	38555 (Sub-product code)	38362 (Product code)	Project ID
45 (Boat model)	ZERO EM TECHNICAL AC BRK UNIT - USA (Title)	HL / Loc	349 / 444 (Sheet)

GENERAL LAYOUT/ LABEL INSTALLATION

WITHOUT COVER

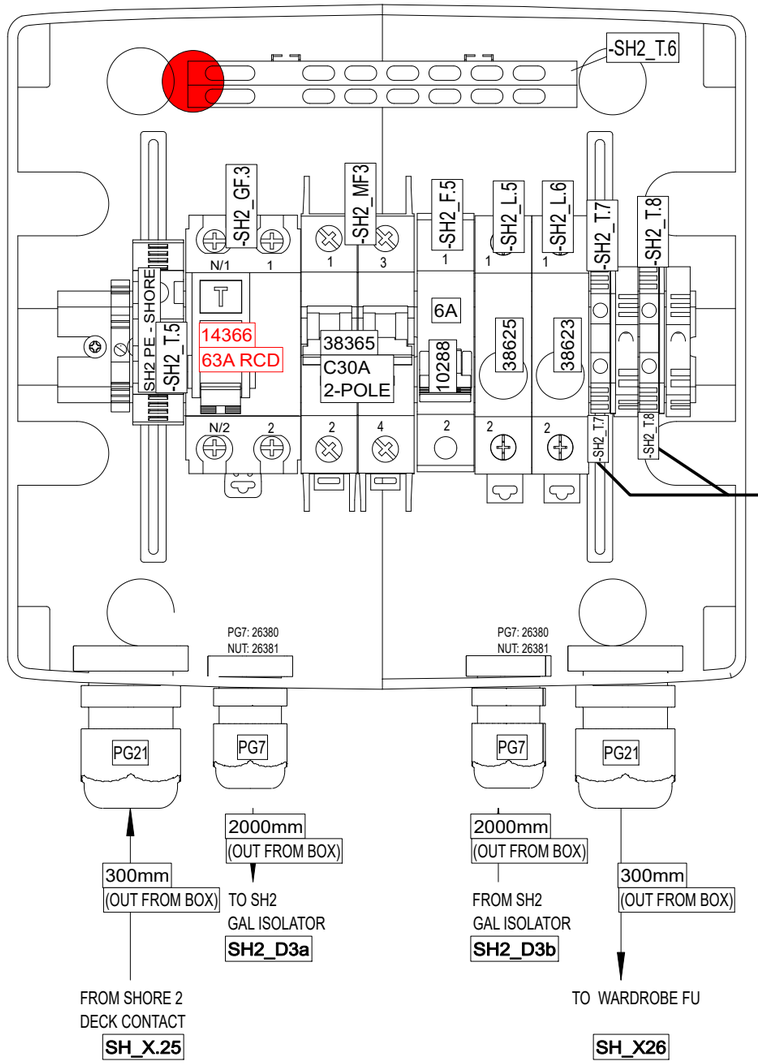

LABELS

ENCLOSURE:
18113 (8-mod)

WITH COVER

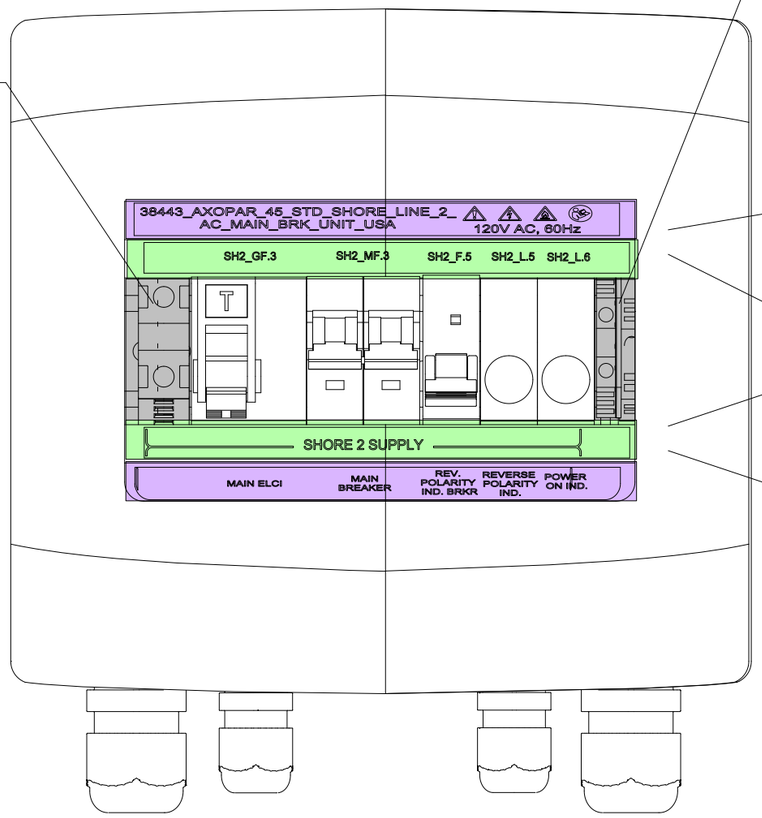

INCLUDED TO DELIVERY

1 x

⚠ WARNING

High Voltage
Avoid serious injury or death from electrical shock.
Disconnect AC shore power and DC battery power to inverter before opening panel.

34599_NAVIX_ABYC_INVERTER_CHARGER_WARNING_LABEL_V1

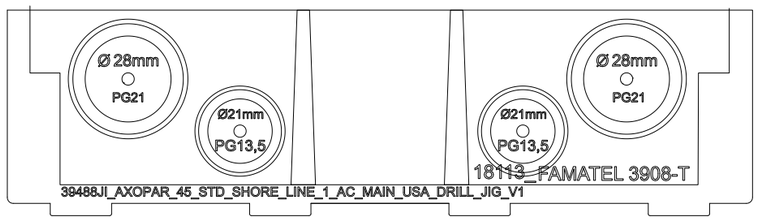

DRILL HOLES WITH 39473JI_V1 AND 39488JI_V1 AS GUIDE

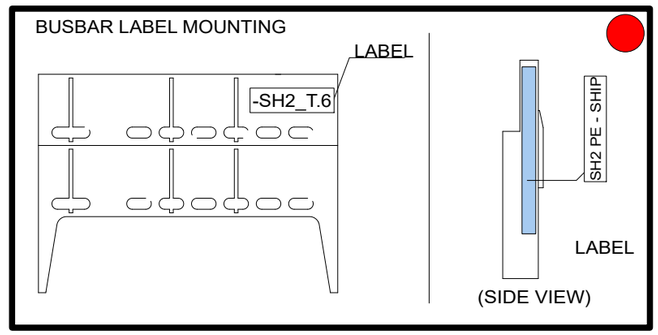

Date of modification	Modified by	Description
20.3.2023	TuM	A1: 2004274; INTRODUCED DRAWING.
24.8.2023	TuM/VR	B2: 2004274; e.g. ADDED CABLES
9.11.2023	PF/TuM	C3: 2004890; Added end clamps: 2005065: SH2_GF3 TYPE CHANGED TO 14366 RCD.

Date 20.3.2023
Drawing by TuM
Sheet rev. B
Project rev. C

NAVIX
Copyright by

Boat: Axopar
Boat model: 45
Sub-product code: 38475
Product code: 38443
Project ID:
Title: STANDARD SHORE 2 LINE AC MAIN BRK UNIT - USA
Loc:
Sheet: 350 / 444

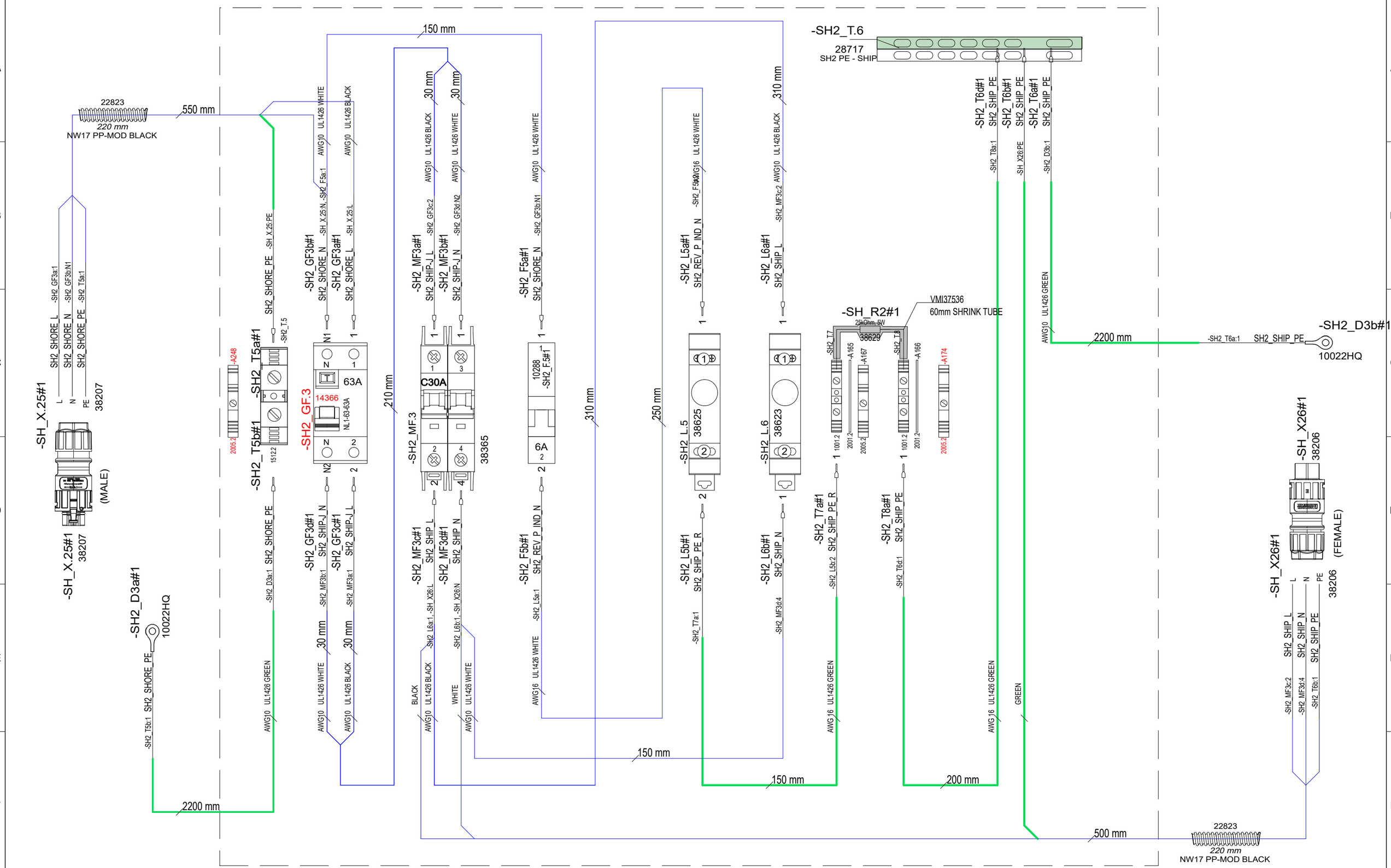

Date of modification	Modified by	Description
20.3.2023	TuM	A1: 2004274; INTRODUCED DRAWING.
24.8.2023	TuM/VR	B2: 2004274; e.g. ADDED CABLES
9.11.2023	PF/TuM	C3: 2004890; Added end clamps: 2005065: SH2_GF3 TYPE CHANGED TO 14366 RCD.

Date	20.3.2023
Drawing by	TuM
Sheet rev.	B
Project rev.	C

Copyright by

NAVIX

Axopar	38475	38443	Project ID
Boat	Sub-product code	Product code	
45	STANDARD SHORE 2 LINE AC MAIN BRK UNIT - USA		351/ 444
Boat model	Title	Loc	Sheet

USA SPC INSPECTION SHEET

PRODUCT LABEL

* DDMMYY-RUNNING NUMBER (For example. 11th March 2019 made product has serial number 110319-01, next is 110319-02 etc.)

	SERIAL NUMBER*						
VISUAL/ MANUAL	1. PERFORM FULL SYSTEM TEST -LABEL IN PLACE						
	2. CORRECT COMPONENTS AND CONNECTIONS						
	3. GROUND CONNECTION IN AND OUT						
	4. RCBO AND CIRCUIT BREAKERS IN I-POSITION						
TESTER	5. ISOLATION RESISTANCE (mA) max **						
	6. GROUND CIRCUIT 10A (Ohm) max **						
	7. RCD TEST, (ms @30mA) max						
	8. POLARITY TEST, PASS or FAIL **						
115Vac VOLTAGE LIVE	9. FUNCTIONAL AND RCD*** TEST, PASS or FAIL						
	SERIAL NUMBER STICKER						
	DATE						
	TESTED BY						

Made according to CENELEC EN 50106:2008 WITH ADDITION OF (8) POLARITY TEST AND (9) 115Vac FUNCTIONAL AND RCD TEST

** (5) ISOLATION RESISTANCE, (6) GROUND CIRCUIT AND (8) POLARITY TEST SHOULD BE TESTED FOR EVERY IN AND OUT

*** (9) RDC TEST-BUTTON OPERATION VERIFICATION

LIMITS:

ISOLATING RESISTOR 1000V = <5mA

GROUND CIRCUIT 10A = <0,2 Ohm

RDC TEST, Time <100mS @30mA

REVISION B

Date of modification	Modified by	Description
20.3.2023	TuM	A1: 2004274; INTRODUCED DRAWING.
24.8.2023	TuM/VR	B2: 2004274; e.g. ADDED CABLES
9.11.2023	PF/TuM	C3: 2004890; Added end clamps: 2005065: SH2_GF3 TYPE CHANGED TO 14366 RCD.

Date	20.3.2023
Drawing by	TuM
Sheet size	A3
Project rev.	C

Copyright by NAVIX

Axopar	38475	38443	
Boat	Sub-product code	Product code	Project ID
45	STANDARD SHORE 2 LINE AC MAIN BRK UNIT - USA	PL	352 / 444
Boat model	Title	Loc	Sheet

GENERAL LAYOUT/ LABEL INSTALLATION

WITHOUT COVER

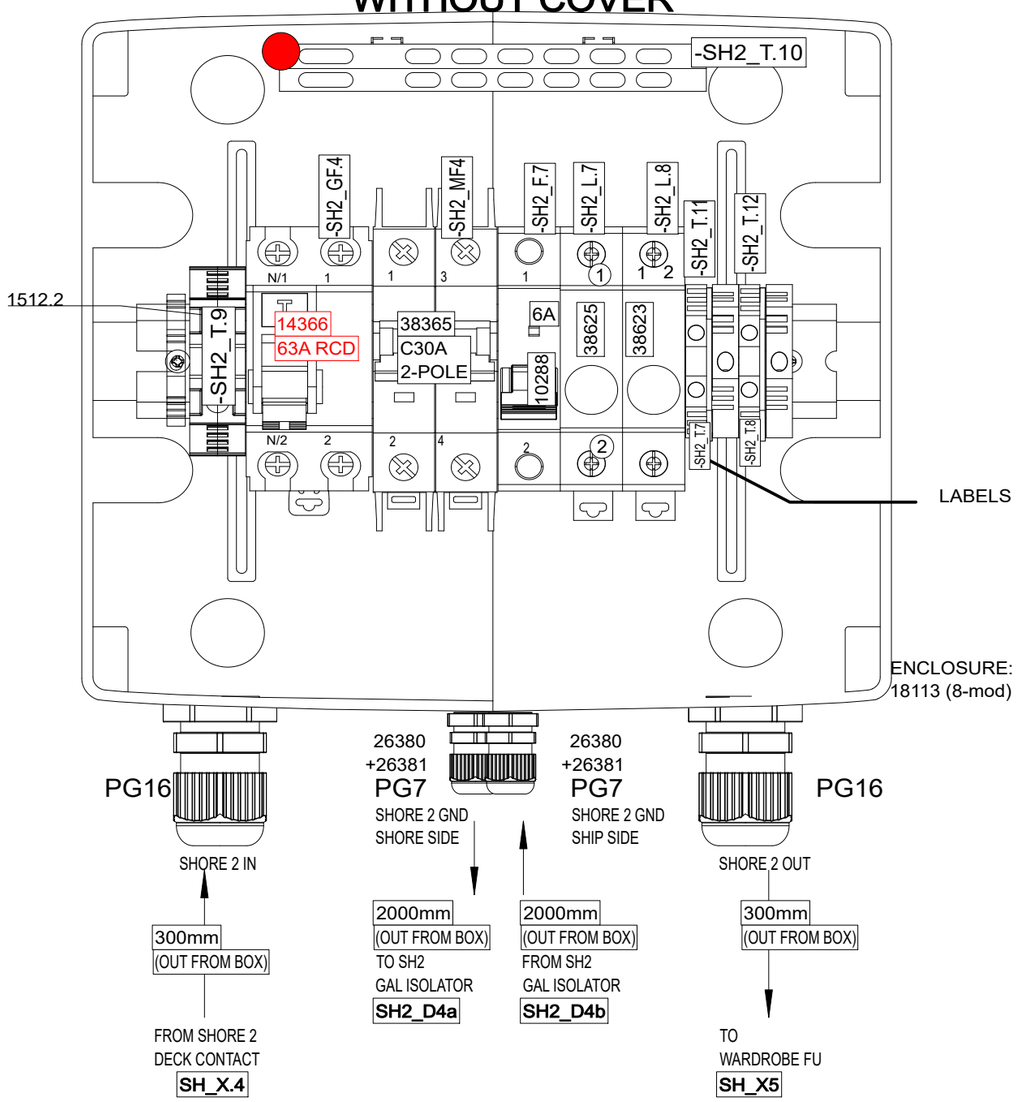

WITH COVER

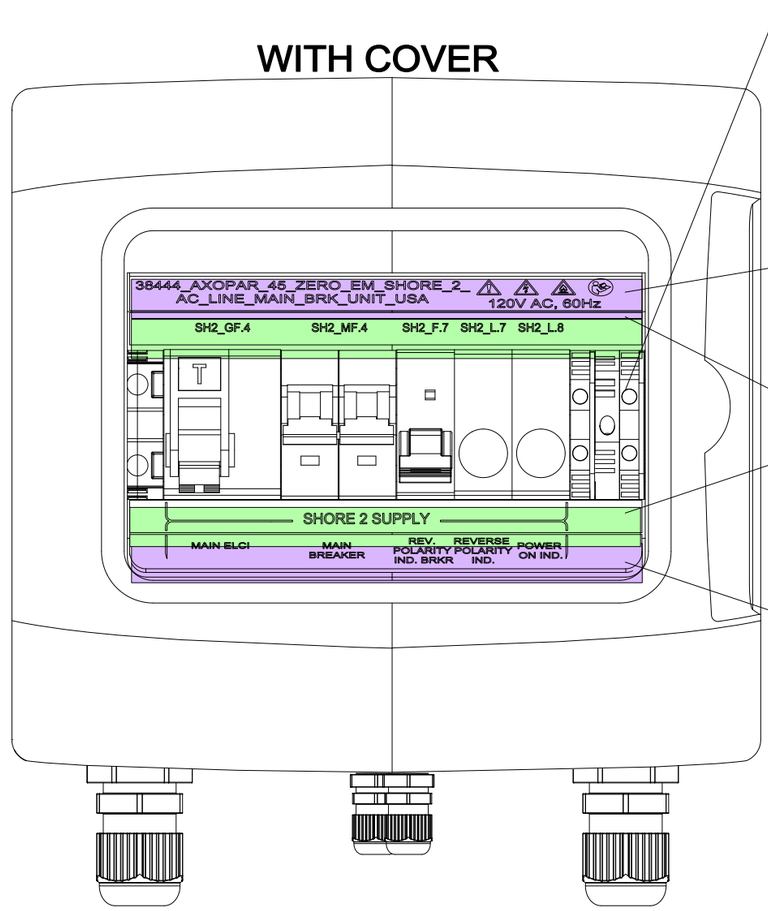

INCLUDED TO DELIVERY

1 x



34599_NAVIX_ABYC_INVERTER_CHARGER_WARNING_LABEL_V1

BUSBAR LABEL MOUNTING

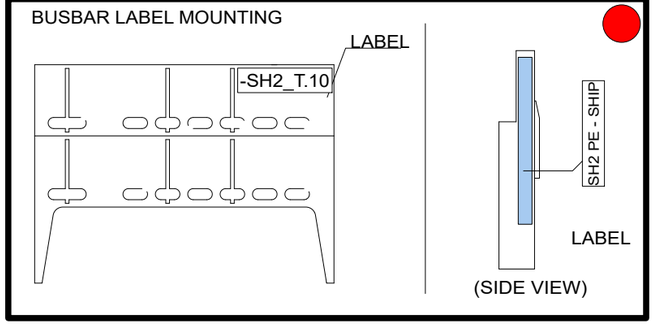

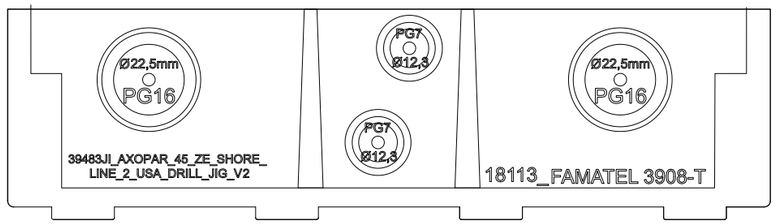

DRILL HOLES WITH 39473JI_V1 AND 39483JI_V2 AS GUIDE

Date of modification	Modified by	Description
28.3.2023	TuM	A1: 2004274; INTRODUCED DRAWING.
15.8.2023	TuM/VR	B2: 2004274; ADDED CABLING
9.11.2023	PF/TuM	C3: 2004890; Added end clamps, 2005065: SH2_GF4 TYPE CHANGED TO 14366 RCD.

Date	28.3.2023
Drawing by	TuM
Sheet size	A3
Project rev.	C

NAVIX

Copyright by

Axopar	38547	38444		
Boat	Sub-product code	Product code	Project ID	
45	ZERO EM SHORE 2 AC LINE MAIN BRK UNIT - USA		HL	353 / 444
Boat model	Title		Loc	Sheet

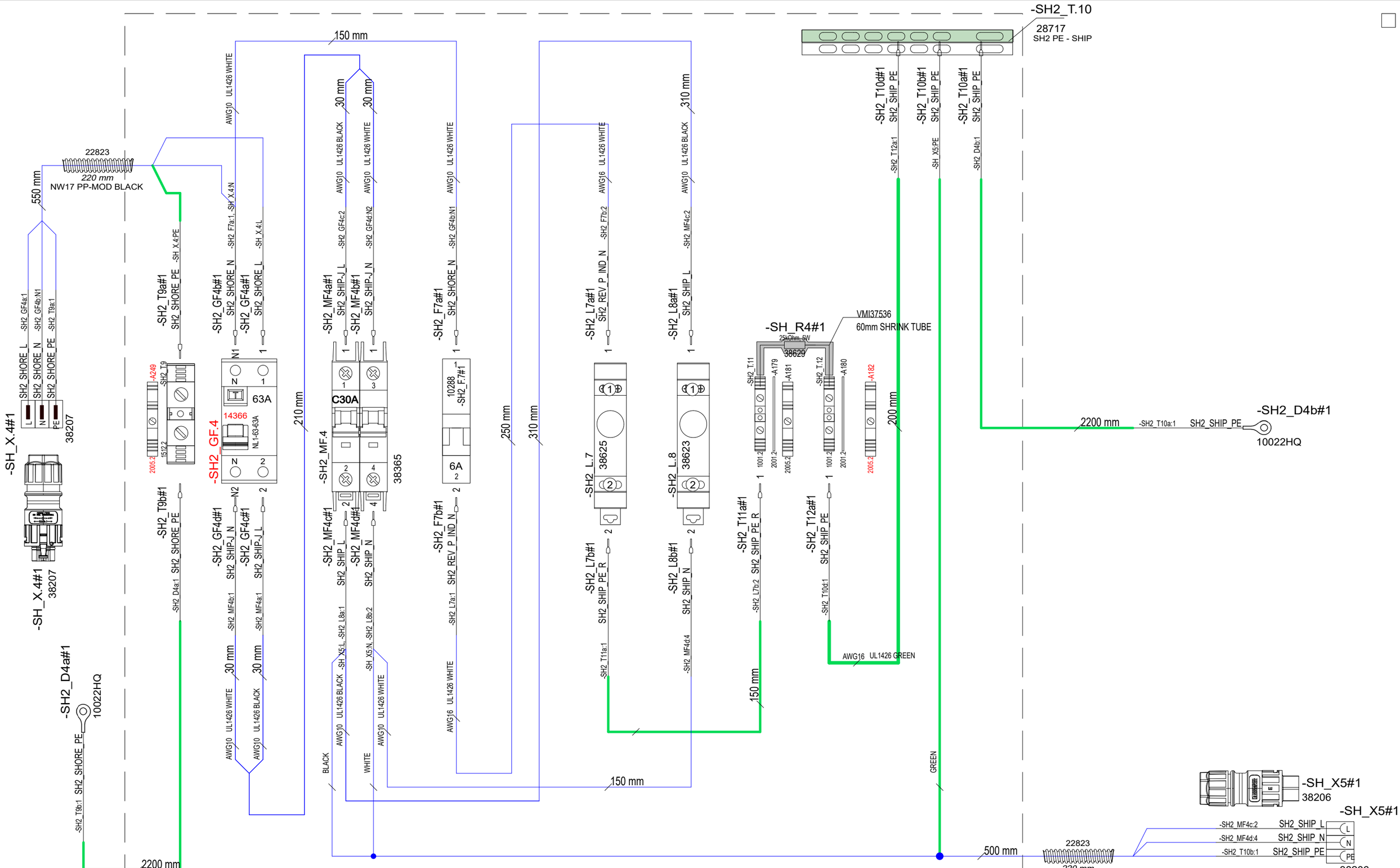

28.3.2023	TuM	A1: 2004274; INTRODUCED DRAWING.	Date	28.3.2023	NAVIX	Axopar	38547	38444	
15.8.2023	TuM/VR	B2: 2004274; ADDED CABLING	Drawing by	TuM		Boat	Sub-product code	Product code	Project ID
9.11.2023	PF/TuM	C3: 2004890; Added end clamps, 2005065: SH2_GF4 TYPE CHANGED TO 14366 FROM	Sheet size	A3		45	ZERO EM SHORE 2 AC LINE		
Date of modification	Modified by	Description	Project rev.	C	Copyright by	Boat model	Title	Loc	354 / 444 Sheet

USA SPC INSPECTION SHEET

PRODUCT LABEL

* DDMMYY-RUNNING NUMBER (For example. 11th March 2019 made product has serial number 110319-01, next is 110319-02 etc.)

	SERIAL NUMBER*						
VISUAL/ MANUAL	1. PERFORM FULL SYSTEM TEST -LABEL IN PLACE						
	2. CORRECT COMPONENTS AND CONNECTIONS						
	3. GROUND CONNECTION IN AND OUT						
	4. RCBO AND CIRCUIT BREAKERS IN I-POSITION						
TESTER	5. ISOLATION RESISTANCE (mA) max **						
	6. GROUND CIRCUIT 10A (Ohm) max **						
	7. RCD TEST, (ms @30mA) max						
	8. POLARITY TEST, PASS or FAIL **						
115Vac VOLTAGE LIVE	9. FUNCTIONAL AND RCD*** TEST, PASS or FAIL						
	SERIAL NUMBER STICKER						
	DATE						
	TESTED BY						

Made according to CENELEC EN 50106:2008 WITH ADDITION OF (8) POLARITY TEST AND (9) 115Vac FUNCTIONAL AND RCD TEST

** (5) ISOLATION RESISTANCE, (6) GROUND CIRCUIT AND (8) POLARITY TEST SHOULD BE TESTED FOR EVERY IN AND OUT

*** (9) RDC TEST-BUTTON OPERATION VERIFICATION

LIMITS:

ISOLATING RESISTOR 1000V = <5mA

GROUND CIRCUIT 10A = <0,2 Ohm

RDC TEST, Time <100mS @30mA

REVISION B

Date of modification	Modified by	Description
28.3.2023	TuM	A1: 2004274; INTRODUCED DRAWING.
15.8.2023	TuM/VR	B2: 2004274; ADDED CABLING
9.11.2023	PF/TuM	C3: 2004890; Added end clamps, 2005065: SH2_GF4 TYPE CHANGED TO 14366 RCD.

Date	28.3.2023
Drawing by	TuM
Sheet rev.	B
Project rev.	C

Copyright by NAVIX

Axopar Boat	38547 Sub-product code	38444 Product code	Project ID
45 Boat model	ZERO EM SHORE 2 AC LINE MAIN BRK UNIT - USA Title	HL Loc	355 / 444 Sheet

HARNESS GENERAL LAYOUT

NOTICE!
THIS PAGE SHOWS ONLY GENERAL LAYOUT OF HARNESS.
MORE DETAILED DRAWINGS ARE SEEN IN FOLLOWED PAGES.

NUMBER INSIDE CIRCLE, FOR IN AREA SHOWS PAGE WHERE ACTUAL DRAWING INCLUDES.

FOR EXAMPLE:

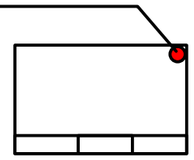

Date of modification	Modified by	Description
22.5.2023	PF	B1: 2004274; INTRODUCED DRAWING.
7.11.2023	PF/TuM	C2: 2004890; A203 wiring, lengths, X.2s added; 2005043 Tubes; 2005065; BMS UPDATE.

Date	22.5.2023
Drawing by	TuM
Sheet rev.	2
Project rev.	C

NAVIX
Copyright by

Axopar		38775	
Boat	Sub-product code	Product code	Project ID
45	HULL HARNESS	HL	356 / 444
Boat model	Title	Loc	Sheet

ASSEMBLY DETAILS

NOTICE!
VERIFY THAT ALL CABLES HAVE MARKINGS
SHOWN IN EXAMPLE BELOW.

EXEMPTION:
ALL <500mm WIRES AND BLACK WIRES
THIS MARKING IS NOT NEEDED.

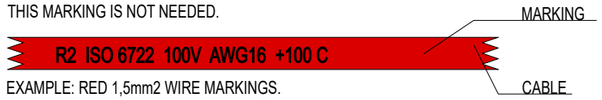

EXAMPLE: RED 1,5mm2 WIRE MARKINGS.

SPLIT TUBE IF NECESSARY

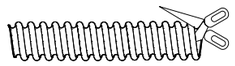

TAPE SPLITTED TUBE EVERY 200 mm

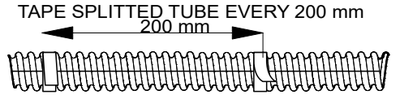

NOTICE!
BATTERY CABLES NEED TO ADD MARKINGS
SHOWN IN EXAMPLE BELOW. PRINTED EVERY 120mm.

EXEMPTION:
ALL BLACK WIRES
THIS MARKING IS NOT NEEDED.



EXAMPLE: RED 16mm2 WIRE MARKINGS.

MARKING SHOWN ABOVE ONLY TO CABLES LISTED BELOW.

	EQUIVALENCY: mm2		AWG
LOOK FOR EQUIVALENT AWG SIZE FOR mm2 AND ADD THIS TO CABLE MARKINGS.	10 mm2	=	AWG8
	16 mm2	=	AWG6
	25 mm2	=	AWG3
FOR EXAMPLE: CABLE SIZE IS 25mm2 --> MARKING AWG3.	35 mm2	=	AWG2

NOTICE!
BATTERY CABLES NEED TO ADD MARKINGS
SHOWN IN EXAMPLE BELOW. PRINTED EVERY 120mm.

EXEMPTION:
ALL BLACK WIRES
THIS MARKING IS NOT NEEDED.



EXAMPLE: RED 50mm2 WIRE MARKINGS.

MARKING SHOWN ABOVE ONLY TO CABLES LISTED BELOW.

	EQUIVALENCY: mm2		AWG
LOOK FOR EQUIVALENT AWG SIZE FOR mm2 AND ADD THIS TO CABLE MARKINGS.	50 mm2	=	AWG0
	70 mm2	=	AWG2/0
	95 mm2	=	AWG3/0
FOR EXAMPLE: CABLE SIZE IS 70mm2 --> MARKING AWG2/0.	120 mm2	=	250 kcmil

NOTICE!
INSTALL CABLES TO DEVICE SO THAT
LARGEST TERMINALS ARE CLOSEST
TO DEVICES CONDUCTIVE AREA.

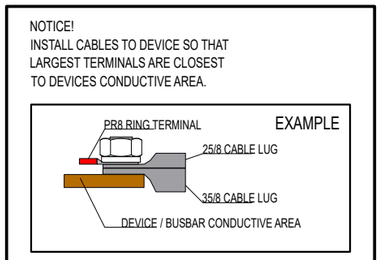

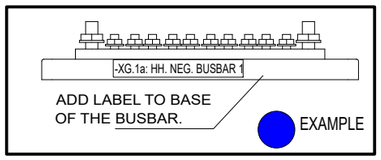

NOTICE! CABLES WITH STICKER
IN MARKED PLACES.

FOR EXAMPLE

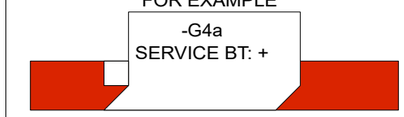

Date of modification	Modified by	Description
29.5.2023	TuM	B1: 2004274; INTRODUCE DRAWGING.
7.11.2023	PF/TuM	C2: 2004890; A203 wiring, lengths, X.2s added; 2005043 Tubes; 2005065; BMS UPDATE.

Date	29.5.2023
Drawing by	TuM
Sheet rev.	2
Project rev.	C

Copyright by NAVIX

Axopar		38775	
Boat	Sub-product code	Product code	Project ID
45	HULL HARNESS	HL	357 / 444
Boat model	Title	Loc	Sheet

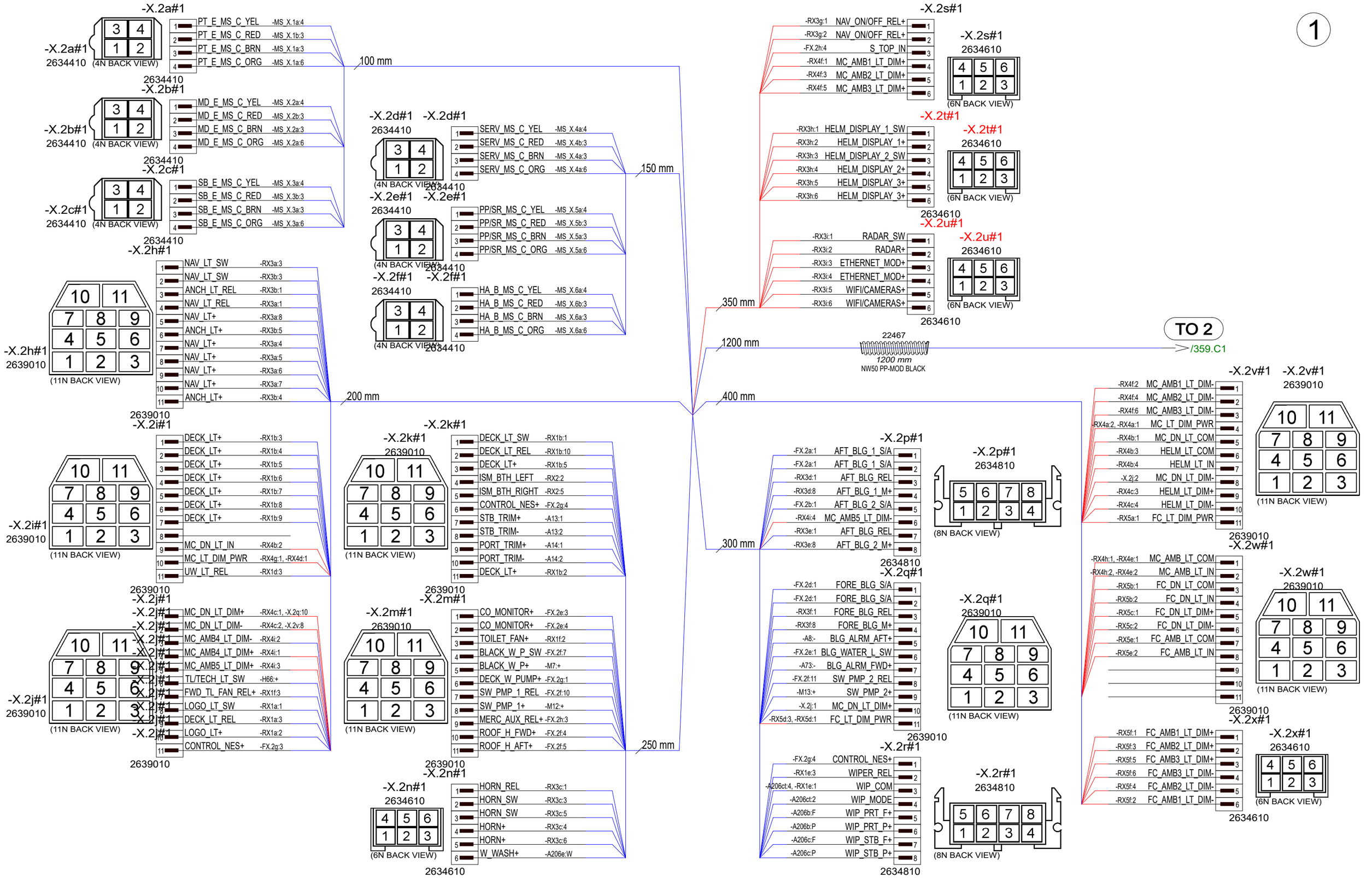

29.5.2023	PF	B1: 2004274; INTRODUCED DRAWING.	Date	12.3.2024	NAVIX	Axopar		38775	
7.11.2023	PF/TuM	C2: 2004890; A203 wiring, lengths, X.2s added; 2005043 Tubes; 2005065; BMS UPDATE.	Drawing by	TuM		Boat	Sub-product code	Product code	Project ID
			Sheet rev.	2		45	HULL HARNESS	HL	358 / 444
Date of modification	Modified by	Description	Project rev.	C	Copyright by	Boat model	Title	Loc	Sheet

2

TO 3

3300 mm — 22824 — 3300 mm — NW22 PP-MOD BLACK — />/360.D1

4300 mm — 22825 — 4300 mm — NW26 PP-MOD BLACK

900 mm — 22820 — 800 mm — NW8.5 PP-MOD BLACK

FW. TANK PRT LVL SENDER -A199#1
-A198:1 FW_PORT_SNS+ 1
-A198:2 FW_PORT_SNS- 2

1000 mm — 22823 — 1000 mm — NW17 PP-MOD BLACK

900 mm — 22822 — 800 mm — NW13 PP-MOD BLACK

HEATER 1 -A23#1
-FX.2h:1 HEATER 1
-FX.2g:2 HEATER_C 2
-XG1c-7:1 INPUT- 3
4
2635410
4 3 / 2 1 -A23#1 2635410 (4U BACK VIEW)

2200 mm — 22822 — 2100 mm — NW13 PP-MOD BLACK

HEATER 2 -A24#1
-FX.2h:2 HEATER 1
-FX.2g:2 HEATER_C 2
-XG1c-8:1 INPUT- 3
4
2635410
4 3 / 2 1 -A24#1 2635410 (4U BACK VIEW)

-XG2c-1#1 DH. NEG. BUSBAR 3
INPUT- -B1-44:1 200 mm
50/6

-XG2a-1#1 DH. AFT NEG. BUSBAR
INPUT- -B1-10:1 200 mm
50/6

1000 mm — 41108 — 1000 mm — NW37 PP-MOD BLACK

TO 1
/358.C7

LABEL -A-

LABEL -C-

BOW W.CTRL BOX: POWER -A50a#1
-MS_X.6c:2 BOW_CTRL+ +
-B2-11:1 INPUT- -

500 mm — 22822 — 400 mm — NW13 PP-MOD BLACK

BOW WINCH C-TOR: CTRL -K1ct#1
-A76ct:A3 AFT_WINCH_A3 A3
-B2-10:1 INPUT- C
-A76ct:A2 AFT_WINCH_A2 A2

500 mm — 22821 — 400 mm — NW10 PP-MOD BLACK

-TAC_X.1dc
DT04-2P
16461
16467 W2P

6300 mm — 22823 — 6300 mm — NW17 PP-MOD BLACK

500 mm — 22822 — 500 mm — NW13 PP-MOD BLACK

300 mm — 22821 — 300 mm — NW10 PP-MOD BLACK

BOW WINCH SWP-A76ct#1
-K1ct:A3 AFT_WINCH_A3 A3
-FX.2g:3 CONTROL_NES+ COM+
-K1ct:A2 AFT_WINCH_A2 A2

5700 mm — 22821 — 5600 mm — NW10 PP-MOD BLACK

700 mm — 22823 — 700 mm — NW17 PP-MOD BLACK

-TAC_X.1dc#1
1 BMS_ATC+ -LX_A3a:4
2 CHR_DISCNN+ -A62d:H
DT04-2P

1000 mm — 22820 — 900 mm — NW8.5 PP-MOD BLACK

BOW TH RELAY SIGNAL -A49ct#1
-RX2:3 BTH_LEFT+ LEFT
-RX2:6 BTH_RIGHT+ RIGHT

700 mm — 22820 — 600 mm — NW8.5 PP-MOD BLACK

-M5#1 MID BILGE PUMP
+ MID_BLG_M+ -BM_X10
- INPUT- -BM_X11

1300 mm — 22822 — 1200 mm — NW13 PP-MOD BLACK

1700 mm — 22824 — 1700 mm — NW22 PP-MOD BLACK

-M7#1 BLACK WATER PUMP
+ BLACK_W_P+ -X.2m:5
- INPUT- -XG1c-17:1

900 mm — 22822 — 800 mm — NW13 PP-MOD BLACK

-A203#1 BW. TANK LEVEL SENSOR
1 INPUT- -A202:1
2 BLACK_W_P_SW -A202:2
3 BW_SIGNAL -A202:3

1000 mm — 22821 — 900 mm — NW10 PP-MOD BLACK

-RX2#1
-B2-8:1 INPUT- 1
-X.2k:4 ISM_BTH_LEFT 2
-A49ct:LEFT BTH_LEFT+ 3
-MS_X.6c:3 BOW_CTRL+ 4
-X.2k:5 ISM_BTH_RIGHT 5
-A49ct:RIGHT BTH_RIGHT+ 6
2635610
6 5 4 / 3 2 1 -RX2#1 2635610 (6U BACK VIEW)

500 mm — 22822 — 400 mm — NW13 PP-MOD BLACK

-BM_X.10
-BM_X10#1 FORE BILGE P MAN
MID_BLG_M+ -FX.2c:1
MID_BLG_M+ -M5:+
MID_BLG_M+ -FX.2c:2
27778
38904 (gel box)

200 mm

HEAVY AUX BOW MS CTRL-MS_X.6a#1
-B2-9:1 INPUT- 1
-MS_X.6b:2 MS_EL_FD_HA_B+ 2
-X.2f:3 HA_B_MS_C_BRN 3
-X.2f:1 HA_B_MS_C_YEL 4
(SEAL PLUG) 5
-X.2f:4 HA_B_MS_C_ORG 6
SEAL PLUG: 25957 RED
DTM04-6P
-MS_X.6a DTM04-6P 33003 33004 WM-6P

400 mm — 22823 — 400 mm — NW17 PP-MOD BLACK

800 mm — 22823 — 700 mm — NW17 PP-MOD BLACK

-BM_X.11
-BM_X11#1 FORE BILGE P NEG
INPUT- -XG1c-14:1
INPUT- -M5:-
INPUT- -XG1c-15:1
27778
38904 (gel box)

700 mm — 22822 — 500 mm — NW13 PP-MOD BLACK

BOW DC NEG. BUSBAR
-RX2:1 INPUT- -B2-8#1
-MS_X.6a:1 INPUT- -B2-9#1
-K1ct:C INPUT- -B2-10#1
-A50a:- INPUT- -B2-11#1

HEAVY AUX BOW MS CTRL-MS_X.6b#1
(SEAL PLUG) 1
-MS_X.6a:2 MS_EL_FD_HA_B+ 2
-X.2f:2 HA_B_MS_C_RED 3
(SEAL PLUG) 4
SEAL PLUG: 10930900 WHITE, 114017
DT044P-E004
-MS_X.6b DT044P-E004 14048 14051 W4P

1200 mm — 22467 — 1200 mm — NW50 PP-MOD BLACK

TO 5
/362.D1

-MS_X.6c#1
-M_RX1:AUX BOW_BT_VOLT+ 1
-A50a:+ BOW_CTRL+ 2
-RX2:4 BOW_CTRL+ 3
2634310
1 2 / 3 -MS_X.6c#1 2634310 (3NT BACK VIEW)

22.5.2023	PF	B1: 2004274; INTRODUCED DRAWING.	Date 22.5.2023	NAVIX	Axopar		38775 / Project ID
7.11.2023	PF/TuM	C2: 2004890; A203 wiring, lengths, X.2s added; 2005043 Tubes; 2005065; BMS UPDATE.	Drawing by PF		Boat	Sub-product code	Product code
			Sheet rev. 2		45	HULL HARNESS	HL / 359 / 444
Date of modification	Modified by	Description	Project rev. C	Copyright by	Boat model	Title	Loc / Sheet

MAIN DC NEG. BUSBAR -B1-7#1
-XG1a-1:1 INPUT- 10
50/10

1620 mm 22823 1500 mm NW17 PP-MOD BLACK

1000 mm 22824 1000 mm NW22 PP-MOD BLACK

1200 mm 22821 1100 mm NW10 PP-MOD BLACK

1400 mm 22822 1300 mm NW13 PP-MOD BLACK

1000 mm 22822 900 mm NW13 PP-MOD BLACK

1000 mm 21693 900 mm NW4.5 PP-MOD BLACK

1100 mm 21693 1000 mm NW4.5 PP-MOD BLACK

1200 mm 21693 1100 mm NW4.5 PP-MOD BLACK

1100 mm 22824 1100 mm NW22 PP-MOD BLACK

2000 mm 22824 2000 mm NW22 PP-MOD BLACK /361.C1

LABEL
-D-

TO 2
/359.A5

170 mm -SBP_A2c:GND INPUT- -XG1a-18#1
150 mm -MS_X.1a:1 INPUT- -XG1a-2#1
150 mm -MS_X.2a:1 INPUT- -XG1a-3#1
130 mm -MS_X.3a:1 INPUT- -XG1a-4#1
130 mm -MS_X.5a:1 INPUT- -XG1a-5#1
110 mm -MS_X.4a:1 INPUT- -XG1a-6#1
110 mm -SBP_A3c:GND INPUT- -XG1a-7#1
90 mm -A54:- INPUT- -XG1a-8#1
90 mm -A55:- INPUT- -XG1a-9#1
30 mm HH. NEG. BUSBAR 1 -XG1a-1#1
-B1-7:1 INPUT-
50/6
90 mm -D2gnd:1 INPUT- -XG1a-11#1
110 mm -D3gnd:1 INPUT- -XG1a-12#1
110 mm -D4gnd:1 INPUT- -XG1a-13#1
130 mm -H66:- INPUT- -XG1a-14#1
130 mm -H62:- INPUT- -XG1a-15#1
150 mm -H63:- INPUT- -XG1a-16#1
150 mm -SBP_A1c:GND INPUT- -XG1a-17#1

LABEL:
-XG.1a: HH. NEG. BUSBAR 1
(TO THE BASE OF BUSBAR BASE)

-XG.1a
2301
28042

TRIM TAB PORT -A14#1
-X.2k:9 PORT_TRIM+ 1
-X.2k:10 PORT_TRIM- 2
DT06-2S
-A14 DT06-2S 10930002 10930102 W2S

UW LIGHT PORT -H63#1
-RX1d:2 PRT_UW_LT+ X +
-XG1a-16:1 INPUT- X -
BS

STORAGE ROOM LT -H66#1
-X.2j:6, -H69:+ TL/TECH_LT_SW X +
-H69:-, -XG1a-14:1 INPUT- X -
BS

PORT ENG. A. ISL: GND -D2gnd#1
-XG1a-11:1 INPUT- 1
RSB 7901

MID ENG. A. ISL: GND -D3gnd#1
-XG1a-12:1 INPUT- 1
RSB 7901

STBD ENG. A. ISL: GND -D4gnd#1
-XG1a-13:1 INPUT- 1
RSB 7901

-MS_X.1b#1 PORT MS CTRL
-MS_X.1b DT044P-E004 14048 14051 W4P
1 (SEAL PLUG)
2 MS_EL_FD_PT+ -MS_X.1a:2
3 PT_E_MS_C_RED -X.2a:2
4 (SEAL PLUG)
DT044P-E004
SEAL PLUG: 10930900 WHITE, 114017

800 mm 22820 700 mm NW8.5 PP-MOD BLACK

500 mm 22823 500 mm NW17 PP-MOD BLACK

400 mm 22822 300 mm NW13 PP-MOD BLACK

PORT MS CTRL -MS_X.1a#1
-XG1a-2:1 INPUT- 1
-MS_X.1b:2 MS_EL_FD_PT+ 2
-X.2a:3 PT_E_MS_C_BRN 3
-X.2a:1 PT_E_MS_C_YEL 4
(SEAL PLUG) 5
-X.2a:4 PT_E_MS_C_ORG 6
SEAL PLUG: 25957 RED
DTM04-6P
-MS_X.1a DTM04-6P 33003 33004 WM-6P

500 mm 22822 500 mm NW13 PP-MOD BLACK

1200 mm 22822 1100 mm NW13 PP-MOD BLACK

900 mm 22821 800 mm NW10 PP-MOD BLACK

800 mm 22820 700 mm NW8.5 PP-MOD BLACK

400 mm 22822 300 mm NW13 PP-MOD BLACK

SERVICE CTRL -MS_X.4a#1
-XG1a-6:1 INPUT- 1
-MS_X.4b:2 MS_EL_FD_SERV+ 2
-X.2d:3 SERV_MS_C_BRN 3
-X.2d:1 SERV_MS_C_YEL 4
(SEAL PLUG) 5
-X.2d:4 SERV_MS_C_ORG 6
SEAL PLUG: 25957 RED
DTM04-6P
-MS_X.4a DTM04-6P 33003 33004 WM-6P

SERVICE CTRL -MS_X.4b#1
(SEAL PLUG) 1
-MS_X.4a:2 MS_EL_FD_SERV+ 2
-X.2d:2 SERV_MS_C_RED 3
(SEAL PLUG) 4
SEAL PLUG: 10930900 WHITE, 114017
DT044P-E004
-MS_X.4b DT044P-E004 14048 14051 W4P

MIDMS CTRL -MS_X.2a#1
-XG1a-3:1 INPUT- 1
-MS_X.2b:2 MS_EL_FD_MD+ 2
-X.2b:3 MD_E_MS_C_BRN 3
-X.2b:1 MD_E_MS_C_YEL 4
(SEAL PLUG) 5
-X.2b:4 MD_E_MS_C_ORG 6
SEAL PLUG: 25957 RED
DTM04-6P
-MS_X.2a DTM04-6P 33003 33004 WM-6P

MID MS CTRL -MS_X.2b#1
(SEAL PLUG) 1
-MS_X.2a:2 MS_EL_FD_MD+ 2
-X.2b:2 MD_E_MS_C_RED 3
(SEAL PLUG) 4
DT044P-E004
SEAL PLUG: 10930900 WHITE, 114017
-MS_X.2b DT044P-E004 14048 14051 W4P

STBD MS CTRL -MS_X.3a#1
-XG1a-4:1 INPUT- 1
-MS_X.3b:2 MS_EL_FD_SB+ 2
-X.2c:3 SB_E_MS_C_BRN 3
-X.2c:1 SB_E_MS_C_YEL 4
(SEAL PLUG) 5
-X.2c:4 SB_E_MS_C_ORG 6
SEAL PLUG: 25957 RED
DTM04-6P
-MS_X.3a DTM04-6P 33003 33004 WM-6P

STBD MS CTRL -MS_X.3b#1
(SEAL PLUG) 1
-MS_X.3a:2 MS_EL_FD_SB+ 2
-X.2c:2 SB_E_MS_C_RED 3
(SEAL PLUG) 4
SEAL PLUG: 10930900 WHITE, 114017
DT044P-E004
-MS_X.3b DT044P-E004 14048 14051 W4P

-MS_X.4c-2, REMOVED

22.5.2023	PF	B1: 2004274; INTRODUCED DRAWING.	Date	22.5.2023	NAVIX	Axopar		38775	
7.11.2023	PF/TuM	C2: 2004890; A203 wiring, lengths, X.2s added; 2005043 Tubes; 2005065; BMS UPDATE.	Drawing by	PF		Boat	Sub-product code	Product code	Project ID
			Sheet rev.	2		45	HULL HARNESS	HL	360 / 444
Date of modification	Modified by	Description	Project rev.	C	Copyright by	Boat model	Title	Loc	Sheet

2

/360.F2

1400 mm — 22821 — 1300 mm — NW10 PP-MOD BLACK

TRIM TAB STBD -A13#1
-X.2k:7 STB_TRIM+ 1
-X.2k:8 STB_TRIM- 2
DT06-2S

-A13#1
DT06-2S
10930002
10930102 W2S

1000 mm — 22822 — 900 mm — NW13 PP-MOD BLACK

AFT STORAGE ROOM OUTLET -A54#1
-MS_X.5c:1 STRG_R_OUTLET+ +
-XG1a-8:1 INPUT- -
MARINE 12V
-A.54#1
AS212

400 mm — 22823 — 400 mm — NW17 PP-MOD BLACK

1500 mm — 22822 — 1400 mm — NW13 PP-MOD BLACK

UW LIGHT STB -H62#1
-RX1d:5 STB_UW_LT+ X +
-XG1a-15:1 INPUT- X -

500 mm — 22820 — 400 mm — NW8.5 PP-MOD BLACK

STORAGE ROOM LT -H69#1
-H66:+ TL/TECH_LT_SW X +
-H66:- INPUT- X -

500 mm — 22822 — 500 mm — NW13 PP-MOD BLACK

400 mm — 22823 — 400 mm — NW17 PP-MOD BLACK

-LX_F.2#1
-LX_F2a#1 1A 24254 -LX_F2b#1
HOLDER: 12136

-LX_F.1#1
-LX_F1a#1 1A 24254 -LX_F1b#1
HOLDER: 12136

-LX_A3a#1 Lynx Smart BMS M-CONN
1 BMS_AUX+ -LX_F2a, -LX_F1a 1.5 RED_FUSE_WIRE
2
3 BMS_ATC_IN -LX_F1b 1.5 RED_FUSE_WIRE
4 BMS_ATC+ -TAC_X.1dc:1
5 BMS_ATD_IN -LX_F2b 1.5 RED_FUSE_WIRE
6 BMS_ATD+ -SBP_A1c:REM-H
7
8
9
10
11
12
13
(ASSEMBLERS MAY IGNORE EMPTY PINS)

1000 mm — 22821 — 800 mm — NW10 PP-MOD BLACK

300 mm — 22822 — 300 mm — NW13 PP-MOD BLACK

600 mm — 22821 — 600 mm — NW10 PP-MOD BLACK

SBP DIRECT SPLY: CONTROL -SBP_A1c#1
-LX_A3a:6, -SBP_A2c:REM-H BMS_ATD+ REM-H
REM-L
ALARM
-XG1a-17:1 INPUT- GND
PROG
(ASSEMBLERS MAY IGNORE EMPTY PINS)

600 mm — 22821 — 600 mm — NW10 PP-MOD BLACK

SBP DIRECT SPLY: CONTROL -SBP_A2c#1
-SBP_A3c:REM-H, -SBP_A1c:REM-H BMS_ATD+ REM-H
REM-L
ALARM
-XG1a-18:1 INPUT- GND
PROG
(ASSEMBLERS MAY IGNORE EMPTY PINS)

600 mm — 22821 — 600 mm — NW10 PP-MOD BLACK

SBP DIRECT SPLY: CONTROL -SBP_A3c#1
-SBP_A2c:REM-H BMS_ATD+ REM-H
REM-L
ALARM
-XG1a-7:1 INPUT- GND
PROG
(ASSEMBLERS MAY IGNORE EMPTY PINS)

800 mm — 22822 — 700 mm — NW13 PP-MOD BLACK

POWER PACK MS CTRL -MS_X.5a#1
-XG1a-5:1 INPUT- 1
-MS_X.5b:2 MS_EL_FD_PWRP+ 2
-X.2e:3 PP/SR_MS_C_BRN 3
-X.2e:1 PP/SR_MS_C_YEL 4
(SEAL PLUG) 5
-X.2e:4 PP/SR_MS_C_ORG 6
SEAL PLUG: 25957 RED
DTM04-6P

-MS_X.5a
DTM04-6P
33003
33004 WM-6P

700 mm — 22822 — 600 mm — NW13 PP-MOD BLACK

POWER PACK MS CTRL -MS_X.5b#1
(SEAL PLUG) 1
-MS_X.5a:2 MS_EL_FD_PWRP+ 2
-X.2e:2 PP/SR_MS_C_RED 3
(SEAL PLUG) 4
SEAL PLUG: 10930900 WHITE, 114017
DT044P-E004

-MS_X.5b
DT044P-E004
14048
14051 W4P

-MS_X.5c#1
-A54:+ STRG_R_OUTLET+ 1
2634110

-MS_X.5c
1
2634110
(1N BACK VIEW)

700 mm — 22820 — 600 mm — NW8.5 PP-MOD BLACK

DC-DC CHARGER 5 -A61d#1
-A60d:H, -A62d:H CHR_DISCNN+ H
L
(ASSEMBLERS MAY IGNORE EMPTY PINS)

500 mm — 22820 — 400 mm — NW8.5 PP-MOD BLACK

DC-DC CHARGER 6 -A62d#1
-A61d:H, -TAC_X.1dc:2 CHR_DISCNN+ H
L
(ASSEMBLERS MAY IGNORE EMPTY PINS)

700 mm — 22820 — 600 mm — NW8.5 PP-MOD BLACK

DC-DC CHARGER 3 -A59d#1
-A58d:H, -A60d:H CHR_DISCNN+ H
L
(ASSEMBLERS MAY IGNORE EMPTY PINS)

500 mm — 22820 — 400 mm — NW8.5 PP-MOD BLACK

DC-DC CHARGER 4 -A60d#1
-A59d:H, -A61d:H CHR_DISCNN+ H
L
(ASSEMBLERS MAY IGNORE EMPTY PINS)

400 mm — 22822 — 400 mm — NW13 PP-MOD BLACK

400 mm — 22822 — 400 mm — NW13 PP-MOD BLACK

1000 mm — 22820 — 900 mm — NW8.5 PP-MOD BLACK

(VICTRON CERBO GX)
EL SYSTEM DISPLAY -A55#1
-FX.2e:5 EL_SYS_DISPL+ +
-XG1a-9:1 INPUT- -

700 mm — 21693 — 600 mm — NW4.5 PP-MOD BLACK

DC-DC CHARGER 1 -A57d#1
-A58d:H CHR_DISCNN+ H
L
(ASSEMBLERS MAY IGNORE EMPTY PINS)

500 mm — 22820 — 400 mm — NW8.5 PP-MOD BLACK

DC-DC CHARGER 2 -A58d#1
-A57d:H, -A59d:H CHR_DISCNN+ H
L
(ASSEMBLERS MAY IGNORE EMPTY PINS)

22.5.2023	PF	B1: 2004274; INTRODUCED DRAWING.	Date	22.5.2023	NAVIX	Axopar	38775
7.11.2023	PF/TuM	C2: 2004890; A203 wiring, lengths, X.2s added; 2005043 Tubes; 2005065; BMS UPDATE.	Drawing by	PF		Boat	Product code
			Sheet rev.	2		45	HULL HARNESS
Date of modification	Modified by	Description	Project rev.	C	Copyright by	Boat model	Title

Sub-product code		Project ID	
HL		361/ 444	
Loc		Sheet	

5

-A206a#1 WIPER C.BOX-1: POWER
+ WIPER+ -FX.2f:3
- INPUT- -XG1c-16:1
200 mm

-A206ct#1 WIPER C.BOX-1: CONTROL
-A206ct 8885 5557-04R
(MINI-FIT JR 4U BACK VIEW)
5557-04R
1 WIP_ON/OFF -RX1e:2
2 WIP_MODE -X.2r:4
3
4 WIP_COM -X.2r:3
200 mm

-A206e#1 WIPER C.BOX-1: WASHER
W W_WASH+ -X.2n:6
200 mm

-A206b#1 WIPER C.BOX-1: W1, PRT SD
P WIP_PRT_P+ -X.2r:6
F WIP_PRT_F+ -X.2r:5
200 mm

-A206c#1 WIPER C.BOX-1: W1, PRT MD
P WIP_STB_P+ -X.2r:8
F WIP_STB_F+ -X.2r:7
200 mm

800 mm 22823 800 mm NW17 PP-MOD BLACK

-T_F13b#1 TOILET FWD
FWD_TOILET_R_BOX+ -A21a:+
1000 mm 22822 900 mm NW13 PP-MOD BLACK

TO 7
/365.D8

TO 2
/359.F4

1400 mm 22467 1400 mm NW50 PP-MOD BLACK

LABEL -B-

1500 mm 41107 1500 mm NW29 PP-MOD BLACK

FWD TOILET: POWER -A21a#1
1700 mm 22824 1600 mm NW22 PP-MOD BLACK
-T_F13b:1 FWD_TOILET_R_BOX+ +
-XG1c-6:1 INPUT- -

FWD SUMP PUMP -M10#1
1900 mm 22821 1800 mm NW10 PP-MOD BLACK
-FX.2f:9 SUMP_PUMP+ +
-XG1b-11:1 INPUT- -

FORE BILGE PUMP -M6#1
1800 mm 22823 1700 mm NW17 PP-MOD BLACK
-BM_X7 FORE_BLG_M+ MAN
-BM_X8 FORE_BLG_S/A AUTO
-BM_X9 INPUT- -

WATER LVL DIGI. SW. FWD -A73#1
1700 mm 22821 1600 mm NW10 PP-MOD BLACK
-FX.2e:2 BLG_WATER_L_SW +
-X.2q:7 BLG_ALRM_FWD+ -

-XG.1c 2301 28042
HH. NEG. BUSBAR 3-XG1c-1#1
30 mm -B1-9:1 INPUT- 50/6
170 mm -RX3g:4 INPUT- -XG1c-20#1
150 mm -RX3a:2 INPUT- -XG1c-2#1
-RX3b:2 INPUT- -XG1c-3#1
130 mm -RX1g:1 INPUT- -XG1c-4#1
-RX3c:2 INPUT- -XG1c-5#1
110 mm -A21a:- INPUT- -XG1c-6#1
-A23:3 INPUT- -XG1c-7#1
90 mm -A24:3 INPUT- -XG1c-8#1
-BM_X9 INPUT- -XG1c-9#1
90 mm -BM_X9 INPUT- -XG1c-10#1
-RX3d:2 INPUT- -XG1c-11#1
110 mm -RX3e:2 INPUT- -XG1c-12#1
-RX3f:2 INPUT- -XG1c-13#1
130 mm -BM_X11 INPUT- -XG1c-14#1
-BM_X11 INPUT- -XG1c-15#1
150 mm -A206a:- INPUT- -XG1c-16#1
-M7:- INPUT- -XG1c-17#1
170 mm -A202:1 INPUT- -XG1c-18#1
-RX3g:3 INPUT- -XG1c-19#1

LABEL:
-XG.1c: HH. NEG. BUSBAR 3
(TO THE BASE OF BUSBAR BASE)

-XG2b-1#1 DH. NEG. BUSBAR 2
INPUT- -B1-11:1 50/6
1600 mm 22823 1500 mm NW17 PP-MOD BLACK

-XG3-1#1 CH. NEG. BUSBAR
INPUT- -B1-35:1 50/6
2400 mm 22823 2300 mm NW17 PP-MOD BLACK

-BM_X.9 27778 38904 (gel box)
-BM_X9#1 FORE BILGE P NEG
INPUT- -XG1c-9:1
INPUT- -M6:-
INPUT- -XG1c-10:1
200 mm

-BM_X.8 27778 38904 (gel box)
-BM_X8#1 FORE BILGE P AUTO
FORE_BLG_S/A -FX.2d:4
FORE_BLG_S/A -M6:AUTO
FORE_BLG_S/A -FX.2d:5

-BM_X.7 27778 38904 (gel box)
-BM_X7#1 FORE BILGE P MAN
FORE_BLG_M+ -RX3f:5
FORE_BLG_M+ -M6:MAN
FORE_BLG_M+ -RX3f:6

LABEL ON TOP OF GELBOX

500 mm 22467 500 mm NW50 PP-MOD BLACK

1000 mm 22823 1000 mm NW17 PP-MOD BLACK

FW. TANK PRT LVL SENSOR -A198#1
200 mm -A199:1 FW_PORT_SNS+ 1
-A199:2 FW_PORT_SNS- 2

FW. TANK STB LVL SENSOR -A200#1
200 mm -A201:1 FW_STBD_SNS+ 1
-A201:2 FW_STBD_SNS- 2

BW. TANK LEVEL SENSOR -A202#1
200 mm -A203:1, -XG1c-18:1 INPUT- 1
-FX.2f:7, -A203:2 BLACK_W_P_SW 2
-A203:3 BW_SIGNAL 3

FUEL TANK LEVEL SENSOR -A204#1
200 mm -A205:1 FUEL_SNS+ 1
-A205:2 FUEL_SNS- 2

700 mm 22467 700 mm NW50 PP-MOD BLACK TO 6 /363.C1
900 mm 41107 900 mm NW29 PP-MOD BLACK /366.A5 TO 9
900 mm 22825 800 mm NW26 PP-MOD BLACK /364.A2 TO 8
900 mm 41107 800 mm NW29 PP-MOD BLACK /364.B5 TO 8
900 mm 22825 900 mm NW26 PP-MOD BLACK /366.A3 TO 9
900 mm 22825 900 mm NW26 PP-MOD BLACK /366.A6 TO 9

22.5.2023	PF	B1: 2004274; INTRODUCED DRAWING.	Date	22.5.2023	NAVIX	Axopar		38775	
7.11.2023	PF/TuM	C2: 2004890; A203 wiring, lengths, X.2s added; 2005043 Tubes; 2005065; BMS UPDATE.	Drawing by	PF		Boat	Sub-product code	Product code	Project ID
			Sheet rev.	2		45	HULL HARNESS	HL	362 / 444
Date of modification	Modified by	Description	Project rev.	C	Copyright by	Boat model	Title	Loc	Sheet

6

-XG.1b
2301
28042

-XG1b-3#1 INPUT- -M9:- 150 mm
-XG1b-4#1 INPUT- -M24:-
-XG1b-5#1 INPUT- -M12:- 130 mm
-XG1b-6#1 INPUT- -M13:-
-XG1b-7#1 INPUT- -BM_X3 110 mm
-XG1b-8#1 INPUT- -BM_X3

-XG1b-1#1 HH. NEG. BUSBAR 2
6 INPUT- -B1-8:1 30 mm
50/6
100 mm

-XG1b-9#1 INPUT- -BM_X6
-XG1b-10#1 INPUT- -BM_X6 90 mm

-XG1b-11#1 INPUT- -M10:- 110 mm

LABEL:
-XG.1b: HH. NEG. BUSBAR 2
(TO THE BASE OF BUSBAR BASE)

LABEL
-E-

TO 5
/362.E8

500 mm 22467 500 mm NW50 PP-MOD BLACK
2600 mm 22467 2600 mm NW50 PP-MOD BLACK
700 mm 22467 700 mm NW50 PP-MOD BLACK
700 mm 22467 700 mm NW50 PP-MOD BLACK

3000 mm 22467 2700 mm NW50 PP-MOD BLACK
2500 mm 22825 2500 mm NW26 PP-MOD BLACK

MAIN DC NEG SHUNT -M_RX1#1
250 mm -MS_X.6c:1 BOW_BT_VOLT+ AUX

MAIN DC NEG. BUSBAR -B1-8#1
100 mm -XG1b-1:1 INPUT- 1 50/10

MAIN DC NEG. BUSBAR -B1-9#1
100 mm -XG1c-1:1 INPUT- 1 50/10

MAIN DC NEG. BUSBAR -B1-10#1
100 mm -XG2a-1:1 INPUT- 1 50/10

MAIN DC NEG. BUSBAR -B1-11#1
100 mm -XG2b-1:1 INPUT- 1 50/10

MAIN DC NEG. BUSBAR -B1-35#1
100 mm -XG3-1:1 INPUT- 1 50/10

MAIN DC NEG. BUSBAR -B1-44#1
100 mm -XG2c-1:1 INPUT- 1 50/10

MAIN DC NEG. BUSBAR -B1-45#1
100 mm -A206:1 FUEL_TANK_GND 1 10024HQ

MAIN DC NEG. BUSBAR -B1-46#1
100 mm -XG1d-1:1 INPUT- 10 25/10

AFT SUMP PUMP -M24#1
2500 mm 22821 2400 mm NW10 PP-MOD BLACK
-FX.2f:9 SUMP_PUMP+ +
-XG1b-4:1 INPUT- -

FRESH WATER PUMP -M9#1
1500 mm 22822 1400 mm NW13 PP-MOD BLACK
-FX.2f:8 FW_PUMP+ +
-XG1b-3:1 INPUT- -

FW. TANK STB LVL SENDER -A201#1
1800 mm 22820 1700 mm NW8.5 PP-MOD BLACK
-A200:1 FW_STBD_SNS+ 1
-A200:2 FW_STBD_SNS- 2

FUEL TANK LEVEL SENDER -A205#1
3300 mm 22820 3200 mm NW8.5 PP-MOD BLACK
-A204:1 FUEL_SNS+ 1
-A204:2 FUEL_SNS- 2

FUEL TANK GND -A206#1
3300 mm 22822 3200 mm NW13 PP-MOD BLACK
-B1-45:1 FUEL_TANK_GND 1 KR4

FUEL TANK GND -A207#1
-A208:1 FUEL_TANK_GND 1 KR4

FUEL FILL GND -A208#1
2100 mm 27041 2000 mm NW7.5 PP-MOD BLACK
-A207:1 FUEL_TANK_GND 1 KR4

1100 mm 22822 1000 mm NW13 PP-MOD BLACK
AFT BILGE PUMP 2 -M4#1
-BM_X4 AFT_BLG_2_M+ MAN
-BM_X5 AFT_BLG_2_S/A AUTO
-BM_X6 INPUT- -

1100 mm 22822 1000 mm NW13 PP-MOD BLACK
AFT BILGE PUMP 1 -M3#1
-BM_X1 AFT_BLG_1_M+ MAN
-BM_X2 AFT_BLG_1_S/A AUTO
-BM_X3 INPUT- -

500 mm 22822 400 mm NW13 PP-MOD BLACK
SEA WATER PUMP 1 -M12#1
-X.2m:8 SW_PMP_1+ +
-XG1b-5:1 INPUT- -

500 mm 22822 400 mm NW13 PP-MOD BLACK
SEA WATER PUMP 2 -M13#1
-X.2q:9 SW_PMP_2+ +
-XG1b-6:1 INPUT- -

1400 mm 22821 1300 mm NW10 PP-MOD BLACK
WATER LVL DIGI. SW. AFT -A8#1
-FX.2e:1 BLG_WATER_L_SW +
-X.2q:5 BLG_ALRM_AFT+ -

200 mm
AFT BILGE P 1 MAN -BM_X1#1
-RX3d:5 AFT_BLG_1_M+
-M3:MAN AFT_BLG_1_M+
-RX3d:6 AFT_BLG_1_M+
-BM_X.1 27778 38904 (gel box)

AFT BILGE P 1 AUTO -BM_X2#1
-FX.2a:4 AFT_BLG_1_S/A
-M3:AUTO AFT_BLG_1_S/A
-FX.2a:5 AFT_BLG_1_S/A
-BM_X.2 27778 38904 (gel box)

AFT BILGE P 1 NEG -BM_X3#1
-XG1b-7:1 INPUT-
-M3:- INPUT-
-XG1b-8:1 INPUT-
-BM_X.3 27778 38904 (gel box)

AFT BILGE P 2 MAN -BM_X4#1
-RX3e:5 AFT_BLG_2_M+
-M4:MAN AFT_BLG_2_M+
-RX3e:6 AFT_BLG_2_M+
-BM_X.4 27778 38904 (gel box)

200 mm
AFT BILGE P 2 AUTO -BM_X5#1
-FX.2b:4 AFT_BLG_2_S/A
-M4:AUTO AFT_BLG_2_S/A
-FX.2b:5 AFT_BLG_2_S/A
-BM_X.5 27778 38904 (gel box)

AFT BILGE P 2 NEG -BM_X6#1
-XG1b-9:1 INPUT-
-M4:- INPUT-
-XG1b-10:1 INPUT-
-BM_X.6 27778 38904 (gel box)

LABEL ON TOP OF GELBOX

Date of modification	Modified by	Description
22.5.2023	PF	B1: 2004274; INTRODUCED DRAWING.
7.11.2023	PF/TuM	C2: 2004890; A203 wiring, lengths, X.2s added; 2005043 Tubes; 2005065; BMS UPDATE.

Date 22.5.2023
Drawing by PF
Sheet rev. 2
Project rev. C

Copyright by NAVIX

Axopar
Boat
45
Boat model
Sub-product code
38775
Product code
Project ID
HULL HARNESS
Title
HL
Loc
363 / 444
Sheet

8

TO 5 /362.E7

200 mm 200 mm

-RX1a#1 2635310
LOGO_LT_SW -X.2j:8
LOGO_LT+ -X.2j:10
DECK_LT_REL -X.2j:9

-RX1b#1 2635310 -RX1b 2638010
DECK_LT_SW -X.2k:1
DECK_LT+ -X.2k:11
DECK_LT+ -X.2i:1
DECK_LT+ -X.2i:2
DECK_LT+ -X.2i:3, -X.2k:3
DECK_LT+ -X.2i:4
DECK_LT+ -X.2i:5
DECK_LT+ -X.2i:6
DECK_LT+ -X.2i:7
DECK_LT_REL -X.2k:2

-RX1d#1 2635610
PRT_UW_LT_SW -FX.2f:1
PRT_UW_LT+ -H63:+
UW_LT_REL -X.2i:11
STB_UW_LT_SW -FX.2f:2
STB_UW_LT+ -H62:+

-RX1e#1 2635310
WIP_COM -X.2r:3
WIP_ON/OFF -A206ct:1
WIPER_REL -X.2r:2

-RX1f#1 2635310
TOILET_FAN_SW -FX.2f:6
TOILET_FAN+ -X.2m:3
FWD_TL_FAN_REL+ -X.2j:7

-RX1g#1 2635110
INPUT- -XG1c-4:1

-RX1a 2635310 (3UT BACK VIEW)
-RX1b 2638010 (11U BACK VIEW)
-RX1d 2635610 (6U BACK VIEW)
-RX1e 2635310 (3UT BACK VIEW)
-RX1f 2635310 (3UT BACK VIEW)
-RX1g 2635110 (1U BACK VIEW)

TO 5 /362.F7

200 mm 200 mm

-RX3a#1 2635810
NAV_LT_REL -X.2h:4
INPUT- -XG1c-2:1
NAV_LT_SW -X.2h:1
NAV_LT+ -X.2h:7
NAV_LT+ -X.2h:8
NAV_LT+ -X.2h:9
NAV_LT+ -X.2h:10
NAV_LT+ -X.2h:5

-RX3b#1 2635610
ANCH_LT_REL -X.2h:3
INPUT- -XG1c-3:1
NAV_LT_SW -X.2h:2
ANCH_LT+ -X.2h:11
ANCH_LT+ -X.2h:6

-RX3c#1 2635610
HORN_REL -X.2h:1
INPUT- -XG1c-5:1
HORN_SW -X.2n:2
HORN+ -X.2n:4
HORN_SW -X.2n:3
HORN+ -X.2n:5

-RX3d#1 2635810
AFT_BLG_REL -X.2p:3
INPUT- -XG1c-11:1
AFT_BLG_1_S/A -FX.2a:2
AFT_BLG_1_S/A -FX.2a:3
AFT_BLG_1_M+ -BM_X1
AFT_BLG_1_M+ -BM_X1
AFT_BLG_1_M+ -X.2p:4

-RX3e#1 2635810
AFT_BLG_REL -X.2p:7
INPUT- -XG1c-12:1
AFT_BLG_2_S/A -FX.2b:2
AFT_BLG_2_S/A -FX.2b:3
AFT_BLG_2_M+ -BM_X4
AFT_BLG_2_M+ -BM_X4
AFT_BLG_2_M+ -X.2p:8

-RX3f#1 2635810
FORE_BLG_REL -X.2q:3
INPUT- -XG1c-13:1
FORE_BLG_S/A -FX.2d:2
FORE_BLG_S/A -FX.2d:3
FORE_BLG_M+ -BM_X7
FORE_BLG_M+ -BM_X7
FORE_BLG_M+ -X.2q:4

-RX3g#1 2635410
NAV_ON/OFF_REL+ -X.2s:1
NAV_ON/OFF_REL+ -X.2s:2
INPUT- -XG1c-19:1
INPUT- -XG1c-20:1

-RX3h#1 2635610
HELM_DISPLAY_1_SW -X.2t:1
HELM_DISPLAY_1+ -X.2t:2
HELM_DISPLAY_2_SW -X.2t:3
HELM_DISPLAY_2+ -X.2t:4
HELM_DISPLAY_3+ -X.2t:5
HELM_DISPLAY_3+ -X.2t:6

-RX3i#1 2635610
RADAR_SW -X.2u:1
RADAR+ -X.2u:2
ETHERNET_MOD+ -X.2u:3
ETHERNET_MOD+ -X.2u:4
WIFI/CAMERAS+ -X.2u:5
WIFI/CAMERAS+ -X.2u:6

-RX3a 2635810 (8U BACK VIEW)
-RX3b 2635610 (6U BACK VIEW)
-RX3c 2635610 (6U BACK VIEW)
-RX3d 2635810 (8U BACK VIEW)
-RX3e 2635810 (8U BACK VIEW)
-RX3f 2635810 (8U BACK VIEW)
-RX3g#1 2635410 (4U BACK VIEW)
-RX3h#1 2635610 (6U BACK VIEW)
-RX3i#1 2635610 (6U BACK VIEW)

-B1-12#1 MAIN DC NEG. BUSBAR
10 INPUT- -XG5a:1
50/10
6000 mm
22823
5900 mm
NW17 PP-MOD BLACK
ROOF H. NEG. CONNECTION -B1-12:1 INPUT- 8
-XG5a#1
50/8
-XG.5
27194
ROOF H. NEG. CONNECTION
+31587 (=COVER)

LABEL:
-XG.5
(TO THE STUD BASE)

-RX1c removed

22.5.2023	PF	B1: 2004274; INTRODUCED DRAWING.	Date	22.5.2023	NAVIX	Axopar		38775	
7.11.2023	PF/TuM	C2: 2004890; A203 wiring, lengths, X.2s added; 2005043 Tubes; 2005065; BMS UPDATE.	Drawing by	PF		Boat	Sub-product code	Product code	Project ID
			Sheet rev.	2		45	HULL HARNESS	HL	364 / 444
Date of modification	Modified by	Description	Project rev.	C	Copyright by	Boat model	Title	Loc	Sheet

7

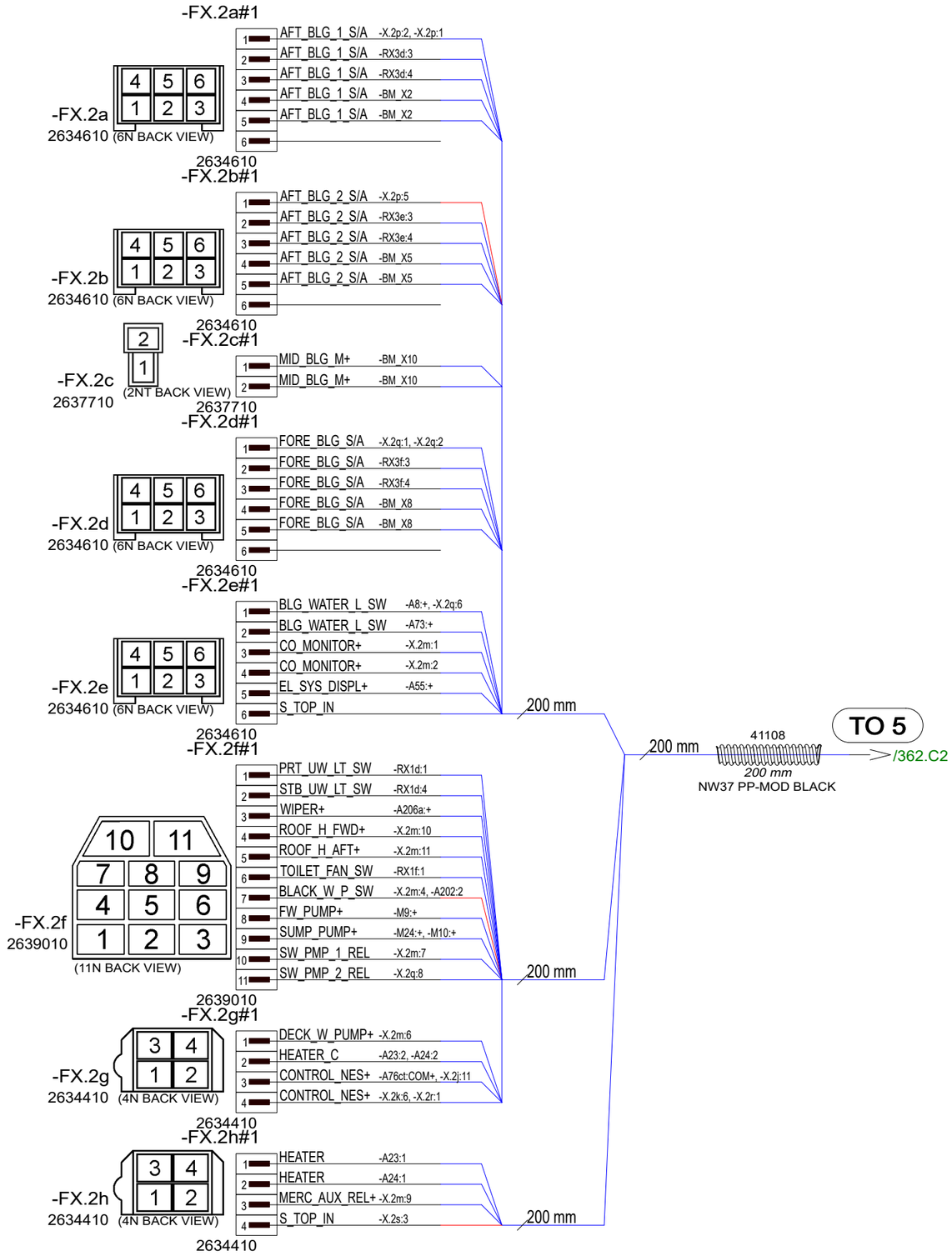

14.3.2024	PF	B1: 2004274; INTRODUCED DRAWING.	Date	13.3.2024	NAVIX	Axopar		38775	
13.3.2024	PF/TuM	C2: 2004890; A203 wiring, lengths, X.2s added; 2005043 Tubes; 2005065; BMS UPDATE.	Drawing by	PF		Boat	Sub-product code	Product code	Project ID
			Sheet rev.	2		45	HULL HARNESS	HL	365 / 444
Date of modification	Modified by	Description	Project rev.	C	Copyright by	Boat model	Title	Loc	Sheet

9

TO 5 /362.F7

-RX4a#1
-RX4a 2635410 (4U BACK VIEW)
1 MC_LT_DIM_PWR -X.2v:4
2 MC_LT_DIM_PWR -X.2v:4
3 INPUT- -XG1d-2:1
4 INPUT- -XG1d-3:1
2635410
100 mm

-RX4b#1
-RX4b 2635410 (4U BACK VIEW)
1 MC_DN_LT_COM -X.2v:5
2 MC_DN_LT_IN -X.2i:9
3 HELM_LT_COM -X.2v:6
4 HELM_LT_IN -X.2v:7
2635410
100 mm

-RX4c#1
-RX4c 2635410 (4U BACK VIEW)
1 MC_DN_LT_DIM+ -X.2j:1
2 MC_DN_LT_DIM- -X.2j:2
3 HELM_LT_DIM+ -X.2v:9
4 HELM_LT_DIM- -X.2v:10
2635410
100 mm

200 mm

-RX4d#1
-RX4d 2637810 (2UT BACK VIEW)
1 MC_LT_DIM_PWR -X.2i:10
2 INPUT- -XG1d-4:1
2637810
100 mm

-RX4e#1
-RX4e 2637810 (2UT BACK VIEW)
1 MC_AMB_LT_COM -X.2w:1
2 MC_AMB_LT_IN -X.2w:2
2637810
100 mm

-RX4f#1
-RX4f 2635610 (6U BACK VIEW)
1 MC_AMB1_LT_DIM+ -X.2s:4
2 MC_AMB1_LT_DIM- -X.2v:1
3 MC_AMB2_LT_DIM+ -X.2s:5
4 MC_AMB2_LT_DIM- -X.2v:2
5 MC_AMB3_LT_DIM+ -X.2s:6
6 MC_AMB3_LT_DIM- -X.2v:3
2635610
100 mm

200 mm

-RX4g#1
-RX4g 2637810 (2UT BACK VIEW)
1 MC_LT_DIM_PWR -X.2i:10
2 INPUT- -XG1d-5:1
2637810
100 mm

-RX4h#1
-RX4h 2637810 (2UT BACK VIEW)
1 MC_AMB_LT_COM -X.2w:1
2 MC_AMB_LT_IN -X.2w:2
2637810
100 mm

-RX4i#1
-RX4i#1 2635410 (4U BACK VIEW)
1 MC_AMB4_LT_DIM+ -X.2j:4
2 MC_AMB4_LT_DIM- -X.2j:3
3 MC_AMB5_LT_DIM+ -X.2j:5
4 MC_AMB5_LT_DIM- -X.2p:6
2635410
100 mm

200 mm

/362.E7

/362.F7 TO 5

200 mm

-RX5a#1
-RX5a 2637810 (2UT BACK VIEW)
100 mm -X.2v:11 FC_LT_DIM_PWR
-XG1d-6:1 INPUT-
2637810

-RX5b#1
-RX5b 2637810 (2UT BACK VIEW)
100 mm -X.2w:3 FC_DN_LT_COM
-X.2w:4 FC_DN_LT_IN
2637810

-RX5c#1
-RX5c 2637810 (2UT BACK VIEW)
100 mm -X.2w:5 FC_DN_LT_DIM+
-X.2w:6 FC_DN_LT_DIM-
2637810

200 mm

-RX5d#1
-RX5d 2635410 (4U BACK VIEW)
100 mm -X.2q:11 FC_LT_DIM_PWR
-XG1d-7:1 INPUT-
-X.2q:11 FC_LT_DIM_PWR
-XG1d-8:1 INPUT-
2635410

-RX5e#1
-RX5e 2637810 (2UT BACK VIEW)
100 mm -X.2w:7 FC_AMB_LT_COM
-X.2w:8 FC_AMB_LT_IN
2637810

-RX5f#1
-RX5f 2635610 (6U BACK VIEW)
100 mm -X.2x:1 FC_AMB1_LT_DIM+
-X.2x:6 FC_AMB1_LT_DIM-
-X.2x:2 FC_AMB2_LT_DIM+
-X.2x:5 FC_AMB2_LT_DIM-
-X.2x:3 FC_AMB3_LT_DIM+
-X.2x:4 FC_AMB3_LT_DIM-
2635610

130 mm -RX4d:2 INPUT- -XG1d-4#1
110 mm -RX4a:4 INPUT- -XG1d-3#1
90 mm -RX4a:3 INPUT- -XG1d-2#1
HH. NEG. BUSBAR 4 -XG1d-1#1
30 mm -B1-46:1 INPUT-
25/6
90 mm -RX4g:2 INPUT- -XG1d-5#1
110 mm -RX5a:2 INPUT- -XG1d-6#1
130 mm -RX5d:2 INPUT- -XG1d-7#1
150 mm -RX5d:4 INPUT- -XG1d-8#1

-XG:1d
2301
28042

LABEL:
-XG.1d: HH. NEG. BUSBAR 4
(TO THE BASE OF BUSBAR BASE)

Date of modification	Modified by	Description					
22.5.2023	PF	B1: 2004274; INTRODUCED DRAWING.	Date	7.6.2024	Axopar		38775
7.11.2023	PF/TuM	C2: 2004890; A203 wiring, lengths, X.2s added; 2005043 Tubes; 2005065; BMS UPDATE.	Drawing by	PF	Boat	Sub-product code	Product code / Project ID
			Sheet rev.	2	45	HULL HARNESS	HL
			Project rev.	C	Boat model	Title	Loc / 366 / 444 Sheet

Copyright by NAVIX.

NOTICE!
VERIFY THAT ALL CABLES HAVE MARKINGS
SHOWN IN EXAMPLE BELOW.

EXEMPTION:
ALL <500mm WIRES AND BLACK WIRES
THIS MARKING IS NOT NEEDED.

MARKING

R2 ISO 6722 100V AWG16 +100 C

CABLE

EXAMPLE: RED 1,5mm2 WIRE MARKINGS.

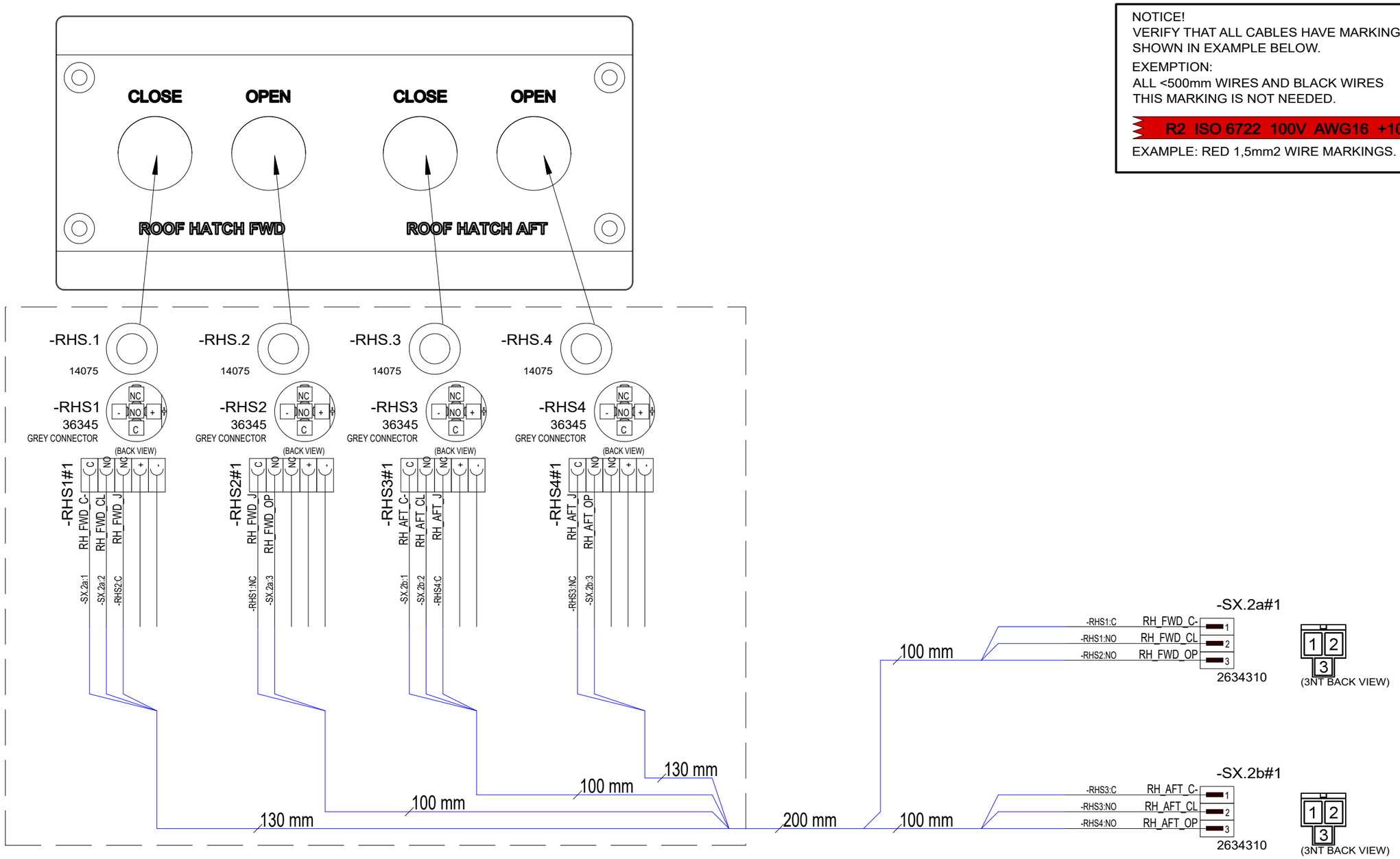

3.5.2023	VR	B1: 2004274; INTRODUCED DRAWINGS	Date 3.5.2023	NAVIX	Axopar	38915	38776	Project ID
31.5.2024	TuM	C1: 2005065; NOT MODIFIED.	Drawing by TuM		Boat	Sub-product code	Product code	
			Sheet rev. 1		45	ROOF HATCH CTRL SWITCH PANEL	HL	367 / 444
Date of modification	Modified by	Description	Project rev. C	Copyright by	Boat model	Title	Loc	Sheet

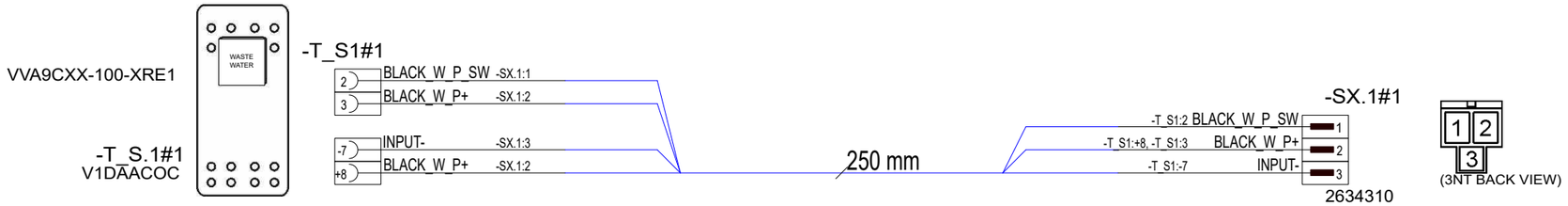

3.5.2023	VR	B1: 2004274; INTRODUCED DRAWINGS	Date 3.5.2023	NAVIX	Axopar		38777	
31.5.2024	TuM	C1: 2005065; NOT MODIFIED.	Drawing by TuM		Boat	Sub-product code	Product code	Project ID
			Sheet rev. 1		45	BLACK WATER PUMP SWITCH	HL	368 / 444
Date of modification	Modified by	Description	Project rev. C	Copyright by	Boat model	Title	Loc	Sheet

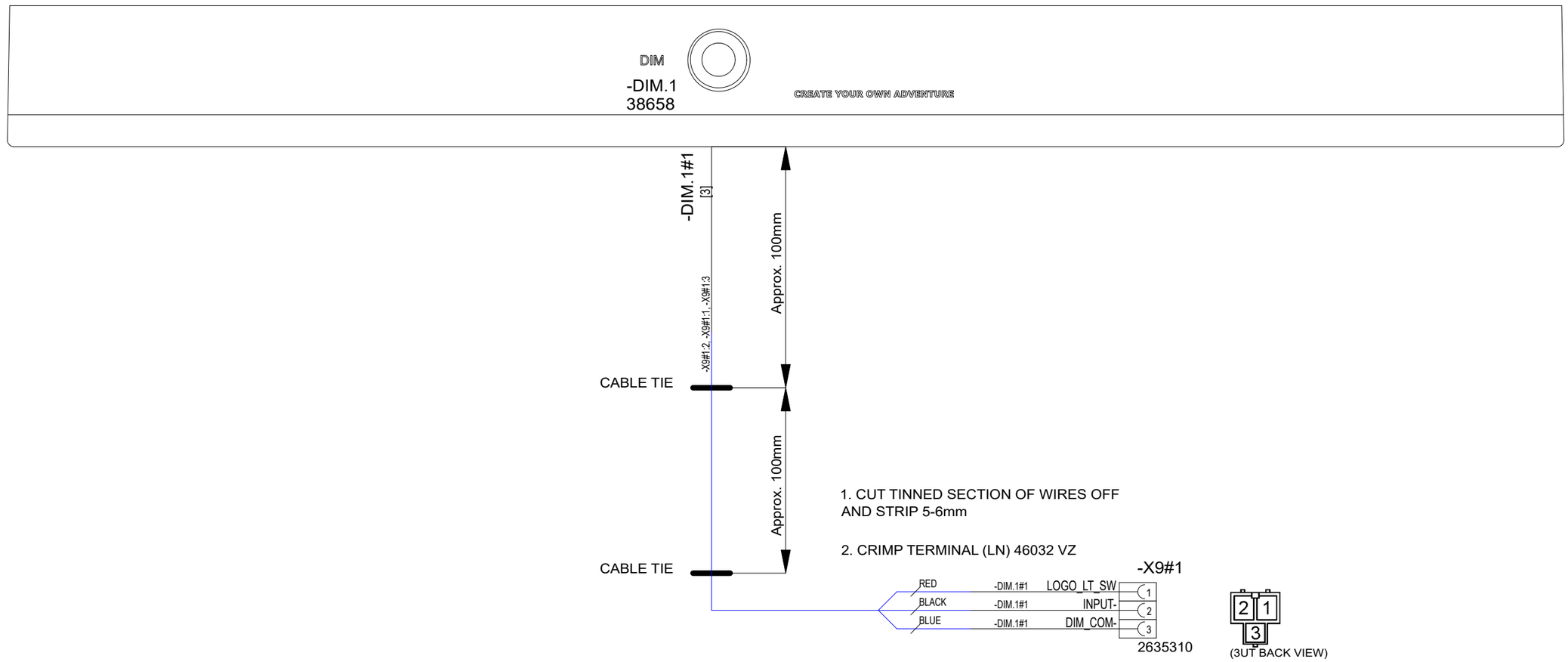

3.5.2023	VR	B1: 2004274; INTRODUCED DRAWINGS	Date 2.5.2023	NAVIX	Axopar	36104	38886	
30.5.2024	TuM	C1: 2005065; NOT MODIFIED.	Drawing by TuM		Boat	Sub-product code	Product code	Project ID
			Sheet rev. 1		45	LOWER COVER PANEL THROTTLE	HL	369 / 444
Date of modification	Modified by	Description	Project rev. C	Copyright by	Boat model	Title	Loc	Sheet

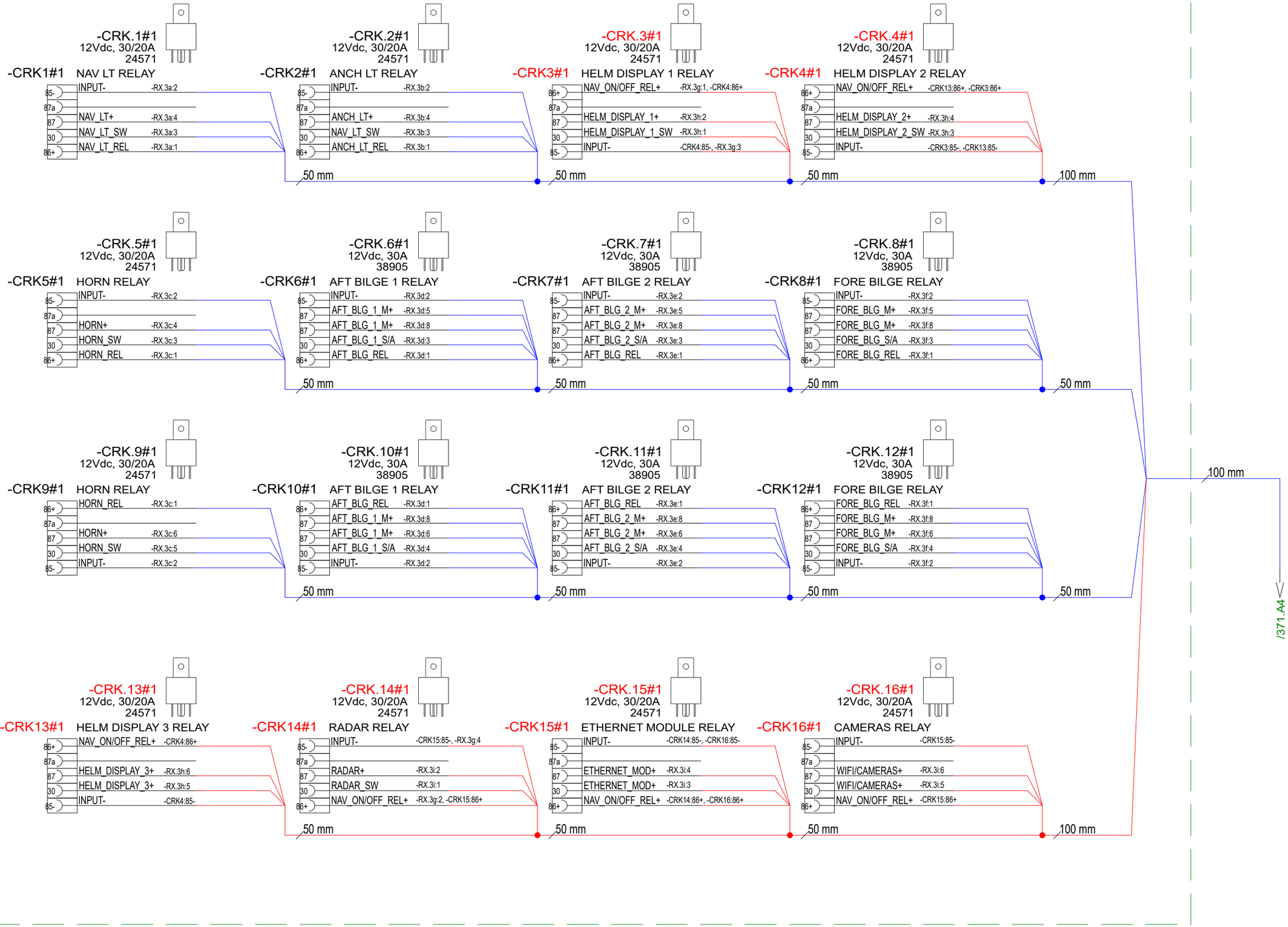

Date of modification	Modified by	Description
2.5.2023	VR	B1: 2004274; INTRODUCED DRAWINGS
27.5.2024	TuM	C2: 2005065: RELAYS RENAMED TO CRK.XX, NAVIG. ON/OFF RELAYS ADDED.

Date	2.5.2023
Drawing by	TuM
Sheet rev.	2
Project rev.	C

Copyright by

Axopar		38903	
Boat	Sub-product code	Product code	Project ID
45	RELAY UNIT - CRITICAL EQ	HL	370 / 444
Boat model	Title	Loc	Sheet

NOTICE!
VERIFY THAT ALL CABLES HAVE MARKINGS
SHOWN IN EXAMPLE BELOW.

EXEMPTION:
ALL <500mm WIRES AND BLACK WIRES
THIS MARKING IS NOT NEEDED.

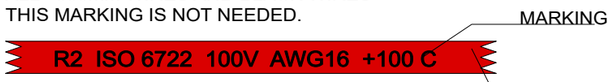

EXAMPLE: RED 1,5mm2 WIRE MARKINGS.

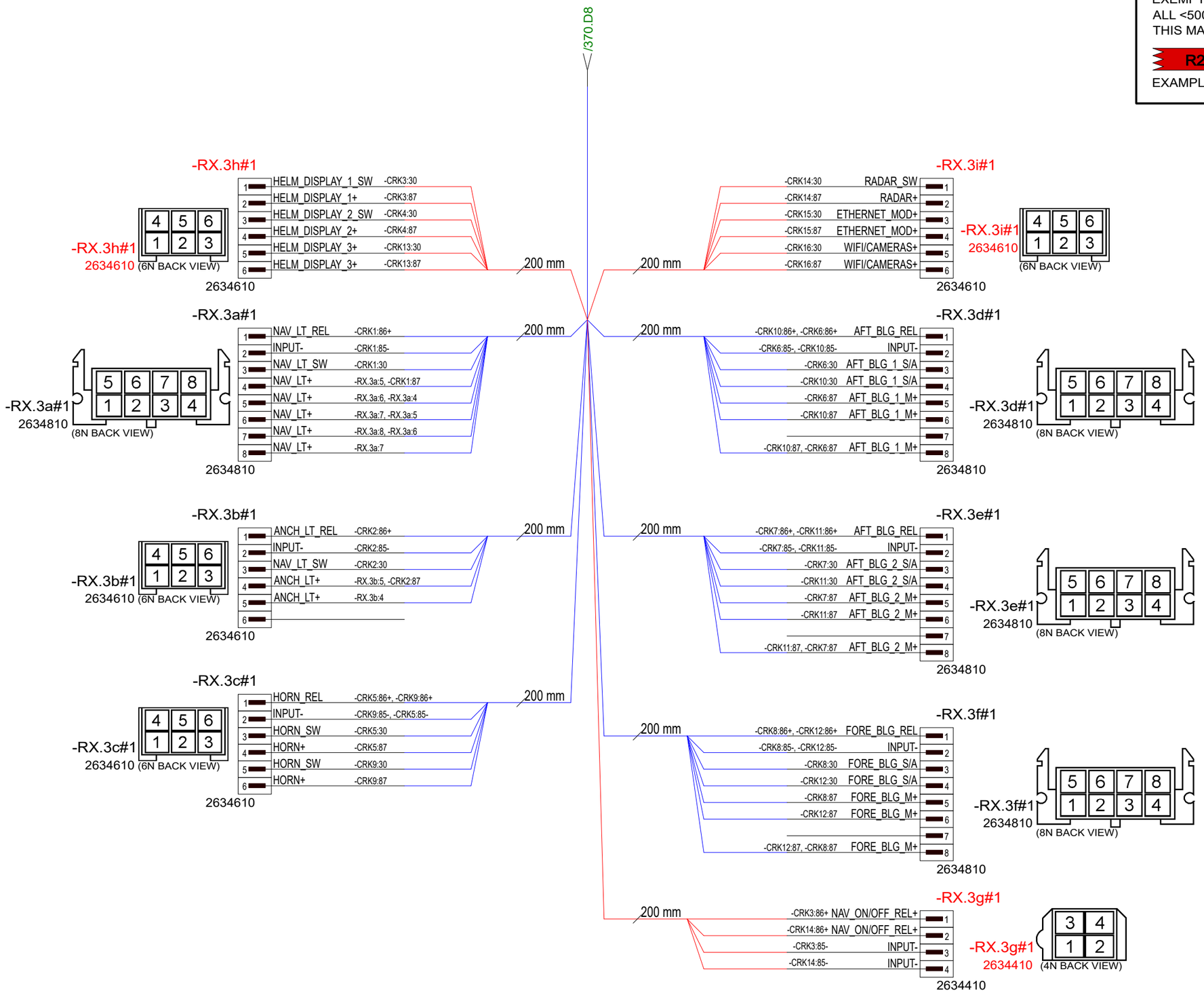

2.5.2023	VR	B1: 2004274; INTRODUCED DRAWINGS	Date	2.5.2023	NAVIX	Axopar		38903	
27.5.2024	TuM	C2: 2005065: RELAYS RENAMED TO CRK.XX, NAVIG. ON/OFF RELAYS ADDED.	Drawing by	TuM		Boat	Sub-product code	Product code	Project ID
			Sheet rev.	2		45	RELAY UNIT - CRITICAL EQ	HL	371/ 444
Date of modification	Modified by	Description	Project rev.	C	Copyright by	Boat model	Title	Loc	Sheet

INSTRUCTIONS FOR ATTACHING CABLES/ RELAYS
TO RELAY HOLDER:

1. PULL SECONDARY LOCK OUT OF RELAY HOLDER
   APPROX 1cm WITH TOOL IF NEEDED
   (DO NOT PULL COMPLETELY OUT)
2. MOUNT WIRES
3. PUSH SECONDARY LOCK BACK IN
4. MOUNT RELAY TO RELAY HOLDER

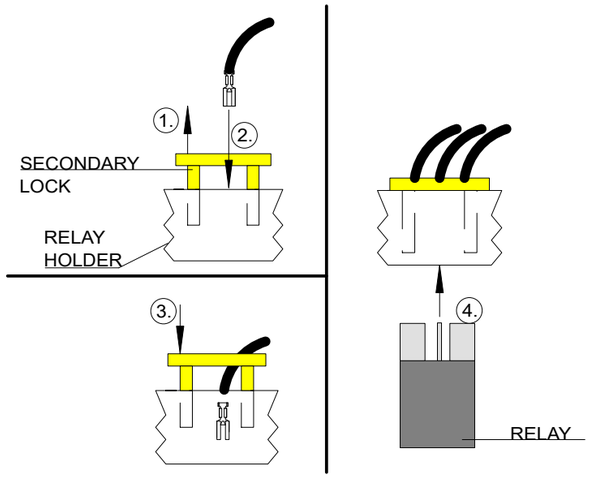

PIN ORDER

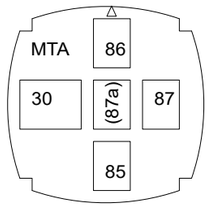

SECONDARY LOCK

SEEN FROM
WIRING SIDE
(BACK VIEW)

RELAY HOLDER PARTS:

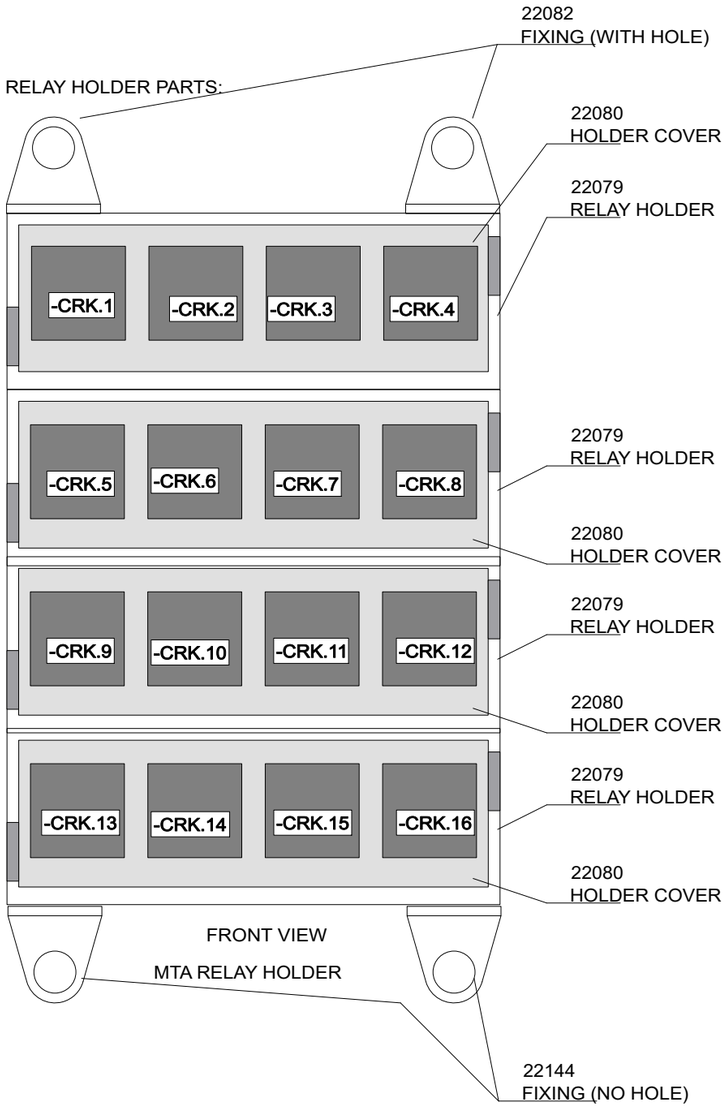

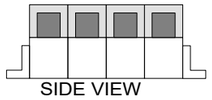

SIDE VIEW

NOTICE!
ATTACH FOUR 22079
RELAY HOLDERS
TOGETHER.

LABEL INSTRUCTIONS

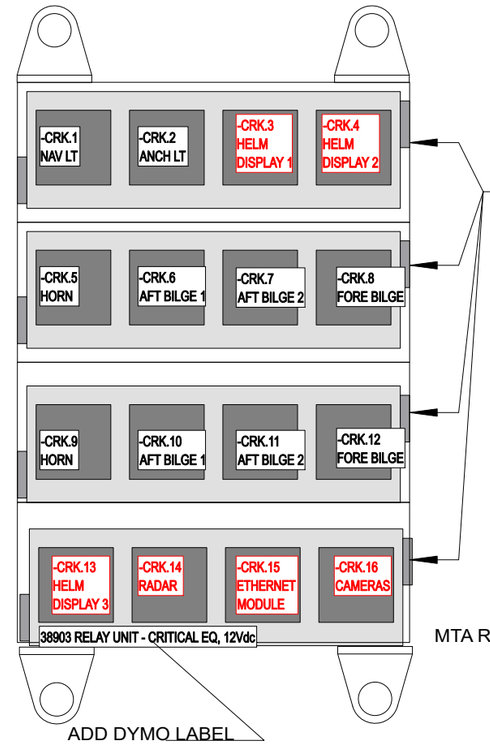

ADD DYMO LABELS TO
RELAY HOLDER COVERS.
FOLLOW EXAMPLE ON LEFT.
LEAVE "RELAY" -WORD FROM
LABEL.

MTA RELAY HOLDER

2.5.2023	VR	B1: 2004274; INTRODUCED DRAWINGS	Date 2.5.2023	NAVIX	Axopar		38903	
27.5.2024	TuM	C2: 2005065: RELAYS RENAMED TO CRK.XX, NAVIG. ON/OFF RELAYS ADDED.	Drawing by TuM		Boat	Sub-product code	Product code	Project ID
			Sheet rev. 2		45	RELAY UNIT - CRITICAL EQ	HL	372 / 444
Date of modification	Modified by	Description	Project rev. C	Copyright by	Boat model	Title	Loc	Sheet

NOTICE! CABLES WITH STICKER

FOR EXAMPLE

-G4a
SERVICE BT: +

NOTICE!
BATTERY CABLES NEED TO ADD MARKINGS
SHOWN IN EXAMPLE BELOW. PRINTED EVERY 120mm.

EXEMPTION:
ALL BLACK WIRES
THIS MARKING IS NOT NEEDED.

MARKING

R2 ISO 6722 100V AWG6 +100 C

CABLE

EXAMPLE: RED 16mm2 WIRE MARKINGS.

MARKING SHOWN ABOVE ONLY TO CABLES LISTED BELOW.

	EQUIVALENCY: mm2		AWG
LOOK FOR EQUIVALENT AWG SIZE FOR mm2 AND ADD THIS TO CABLE MARKINGS.	10 mm2	=	AWG8
	16 mm2	=	AWG6
FOR EXAMPLE: CABLE SIZE IS 25mm2 --> MARKING AWG3.	25 mm2	=	AWG3
	35 mm2	=	AWG2

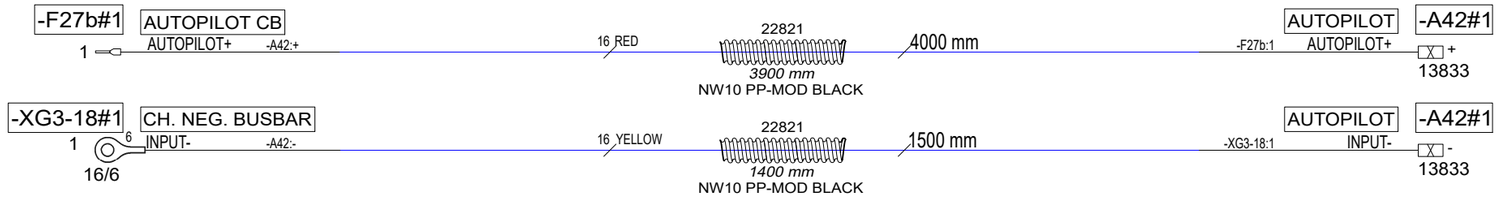

Date of modification	Modified by	Description
29.5.2023	TuM	B1: 2004271; INTRODUCED DRAWING.
18.3.2024	TuM	C2: 2005043; Tubes added.

Date	29.5.2023
Drawing by	TuM
Sheet rev.	2
Project rev.	C

Copyright by

NAVIX

Axopar Boat		39288 Product code	Project ID
45 Boat model	AUTOPILOT CABLES Title	HL Loc	373 / 444 Sheet

NOTICE! CABLES WITH STICKER

FOR EXAMPLE

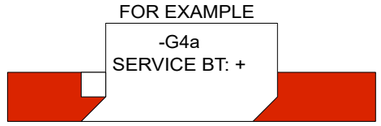

NOTICE!
BATTERY CABLES NEED TO ADD MARKINGS
SHOWN IN EXAMPLE BELOW. PRINTED EVERY 120mm.

EXEMPTION:
ALL BLACK WIRES
THIS MARKING IS NOT NEEDED.

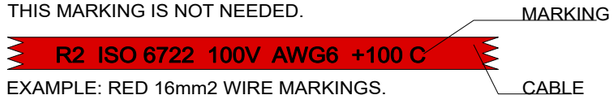

EXAMPLE: RED 16mm2 WIRE MARKINGS.

MARKING SHOWN ABOVE ONLY TO CABLES LISTED BELOW.

	EQUIVALENCY: mm2		AWG
LOOK FOR EQUIVALENT AWG SIZE FOR mm2 AND ADD THIS TO CABLE MARKINGS.	10 mm2	=	AWG8
	16 mm2	=	AWG6
FOR EXAMPLE:	25 mm2	=	AWG3
CABLE SIZE IS 25mm2 --> MARKING AWG3.	35 mm2	=	AWG2

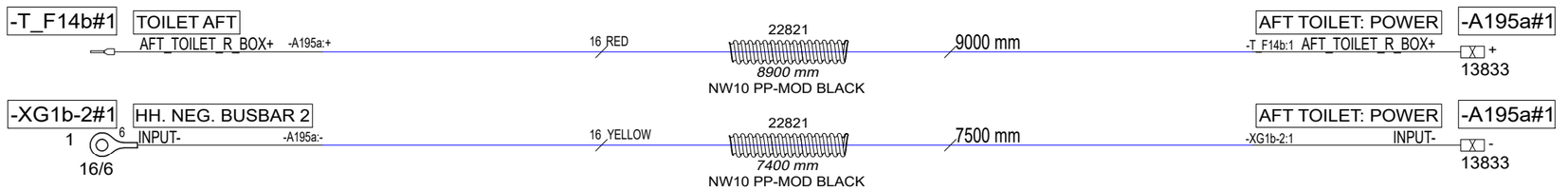

Date of modification	Modified by	Description
29.5.2023	TuM	B1: 2004274; INTRODUCED DRAWING.
18.3.2024	TuM	C2: 2005043; Tubes added.

Date 29.5.2023
Drawing by TuM
Sheet rev. 2
Project rev. C

Copyright by NAVIX

Boat	Sub-product code	Product code	Project ID
Axopar		39289	
Boat model	Title	Loc	Sheet
45	AFT TOILET CABLES	HL	374 / 444

GENERAL LAYOUT/ LABEL INSTALLATION

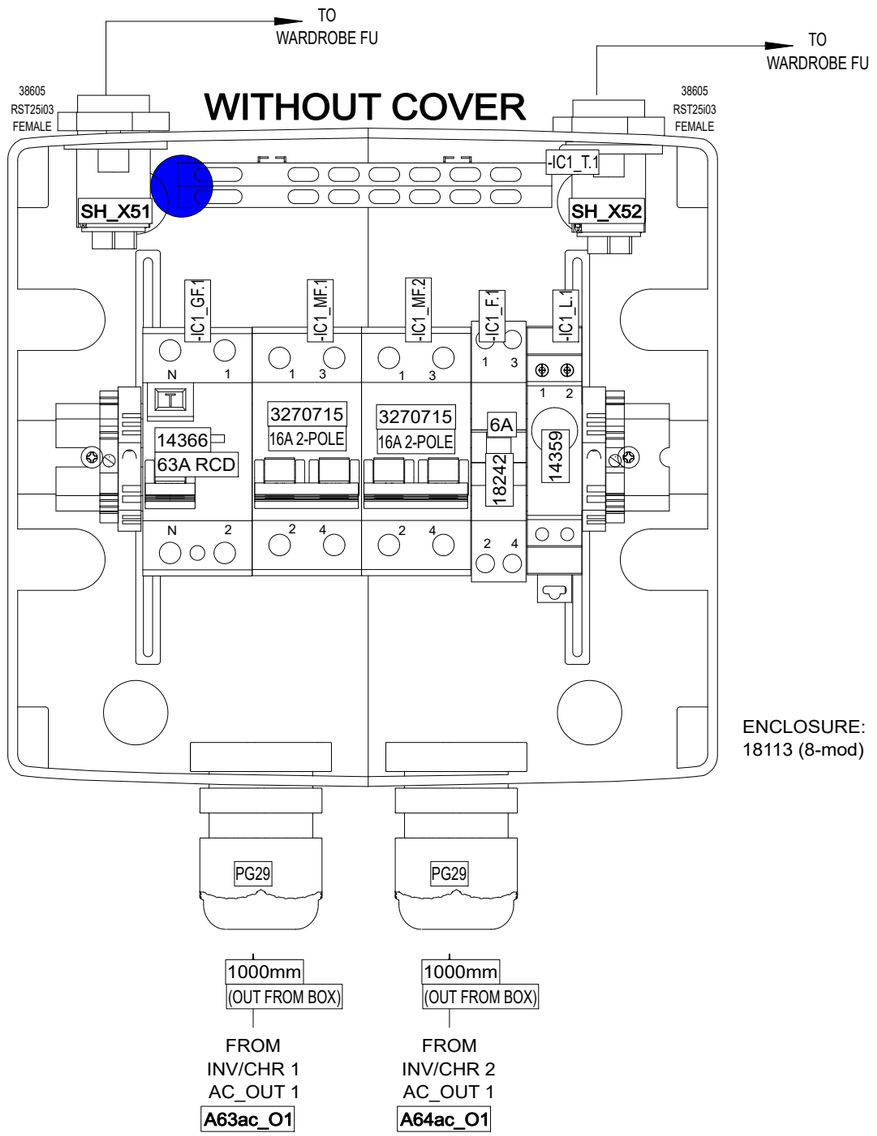

ENCLOSURE:
18113 (8-mod)

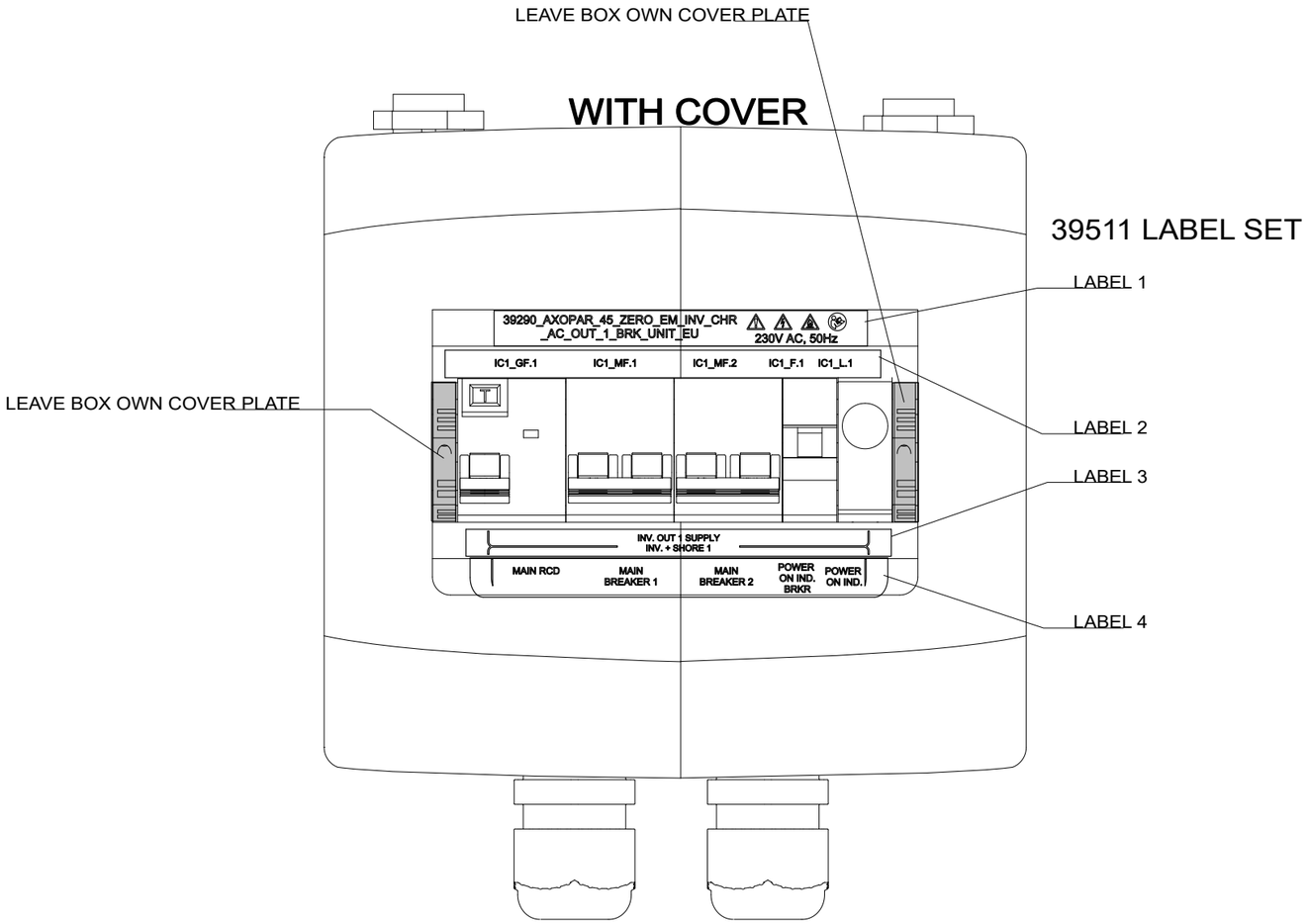

39511 LABEL SET

LABEL 1

LABEL 2

LABEL 3

LABEL 4

INCLUDED TO DELIVERY

1 x

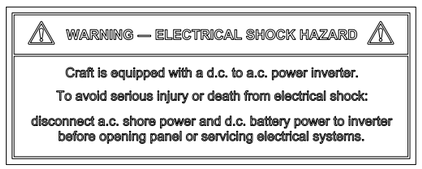

35106_NAVIX_ISO_INVERTER_CHARGER_WARNING_LABEL_V1

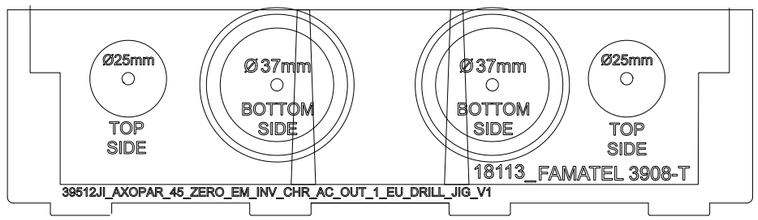

DRILL HOLES WITH 39473JI_V1 AND 39512JI_V1 AS GUIDE

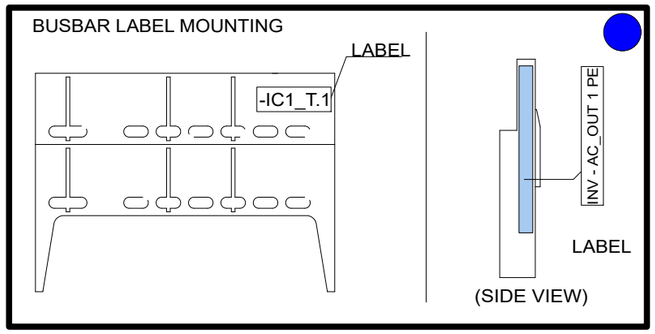

Date of modification	Modified by	Description
8.3.2022	VR	B1: 2004274; INTRODUCED DRAWING.
9.11.2023	PF	C2: 2004890; End clamps added

Date	8.3.2022
Drawing by	TuM
Sheet rev.	2
Project rev.	C

Copyright by

NAVIX

Axopar	39511	39290		
Boat	Sub-product code	Product code	Project ID	
45	ZERO EM INV/CHR AC OUT 1 BRK UNIT - EU			
Boat model	Title		HL Loc	375 / 444 Sheet

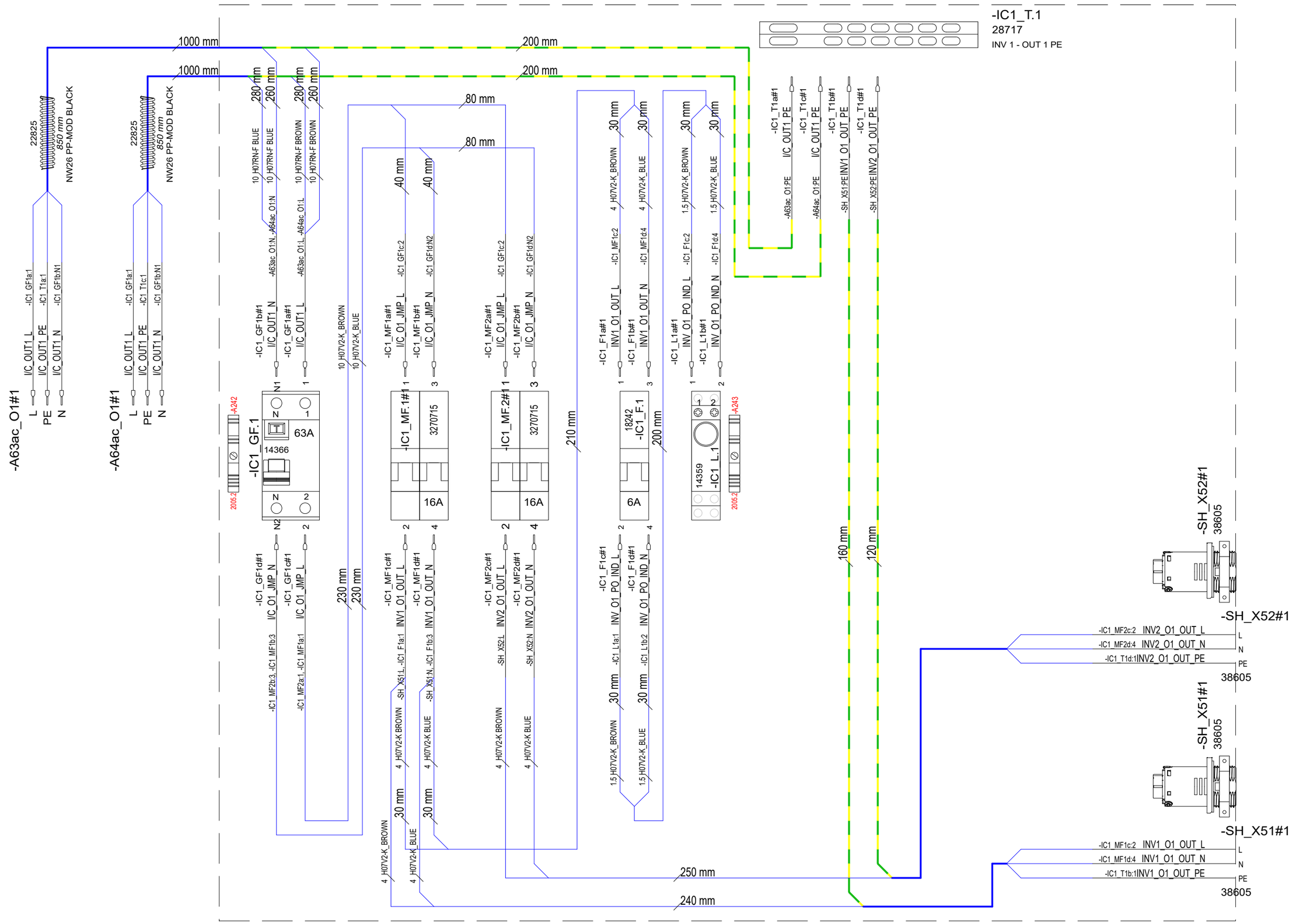

8.3.2022	VR	B1: 2004274; INTRODUCED DRAWING.	Date	8.3.2022	NAVIX	Axopar	39511	39290	
9.11.2023	PF	C2: 2004890; End clamps added	Drawing by	TuM		Boat	Sub-product code	Product code	Project ID
			Sheet rev.	2		45	ZERO EM INV/CHR AC OUT 1 BRK UNIT - EU		
Date of modification	Modified by	Description	Project rev.	C	Copyright by	Boat model	Title	HL Loc	376 / 444 Sheet

SPC TARKASTUSPÖYTÄKIRJA
SPC INSPECTION SHEET

TUOTE TARRA /
PRODUCT LABEL

* PPKKVV-JÄRJESTYSNUMERO / DDMMYY-RUNNING NUMBER (Esim. 11. maaliskuuta 2013 tehty tuote on sarjanumeroltaan 110313-01, seuraava on 110313-02 jne.)

SARJANUMERO* / SERIAL NUMBER*						
JOHDOT KIINNI OIKEIN / CORRECT CONNECTIONS						
MAADOITUS TULEVAT JA LÄHTEVÄT / GROUND CONNECTION IN AND OUT						
VVS JA TOTSIT I-ASENNOSSA / RCBO AND CIRCUIT BREAKERS IN I-POSITION						
ERISTYSVASTUS (mA) max lukema ** / ISOLATION RESISTOR (mA) max **						
MAAPIIRI 10A (Ohm) max lukema ** / GROUND CIRCUIT 10A (Ohm) max **						
TOIMINNALLINEN JA VVS TESTAUS / FUNCTIONAL AND RCBO TEST						
SARJANUMERO TARRA / SERIAL NUMBER STICKER						
PVM / DATE						
TESTASI / TESTED BY						

Tehty CENELEC EN 50106 mukaan / Made according to CENELEC EN 50106

**ERISTYSVASTUS JA MAAPIIRI TESTATTAVA JOKAISEEN SISÄÄNTULOON JA ULOSMENOON / ISOLATION RESISTOR AND GROUND CIRCUIT SHOULD BE TESTED FOR EVERY IN AND OUT

RAJA-ARVOT / LIMITS:

ERISTYSVASTUS / ISOLATING RESISTOR 1000V = <20mA

MAAPIIRI / GROUND CIRCUIT 10A = <0,2 Ohm

Date of modification	Modified by	Description
8.3.2022	VR	B1: 2004274; INTRODUCED DRAWING.
9.11.2023	PF	C2: 2004890; End clamps added

Date	8.3.2022
Drawing by	TuM
Sheet rev.	2
Project rev.	C

Copyright by

NAVIX

Boat	Sub-product code	Product code	Project ID
Axopar	39511	39290	

Boat model	Title	Loc	Sheet
45	ZERO EM INV/CHR AC OUT 1 BRK UNIT - EU	HL	377 / 444

GENERAL LAYOUT/ LABEL INSTALLATION

WITHOUT COVER

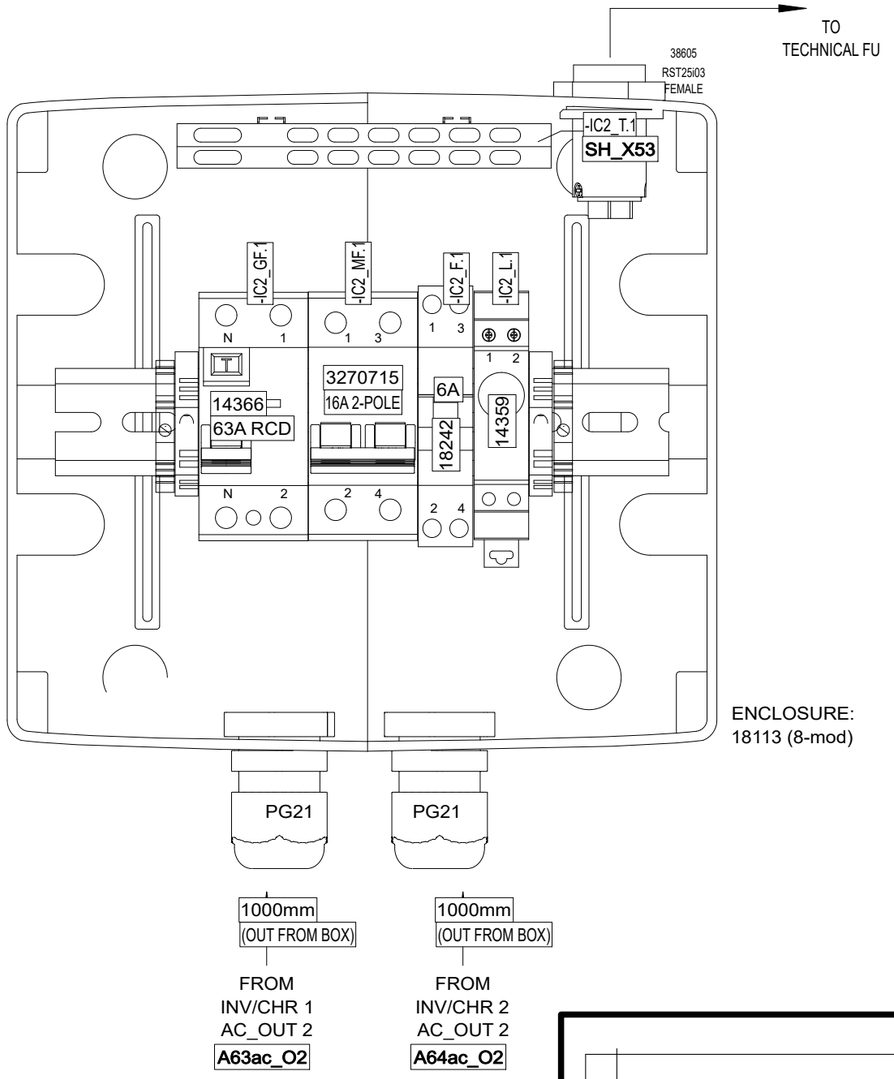

ENCLOSURE:
18113 (8-mod)

WITH COVER

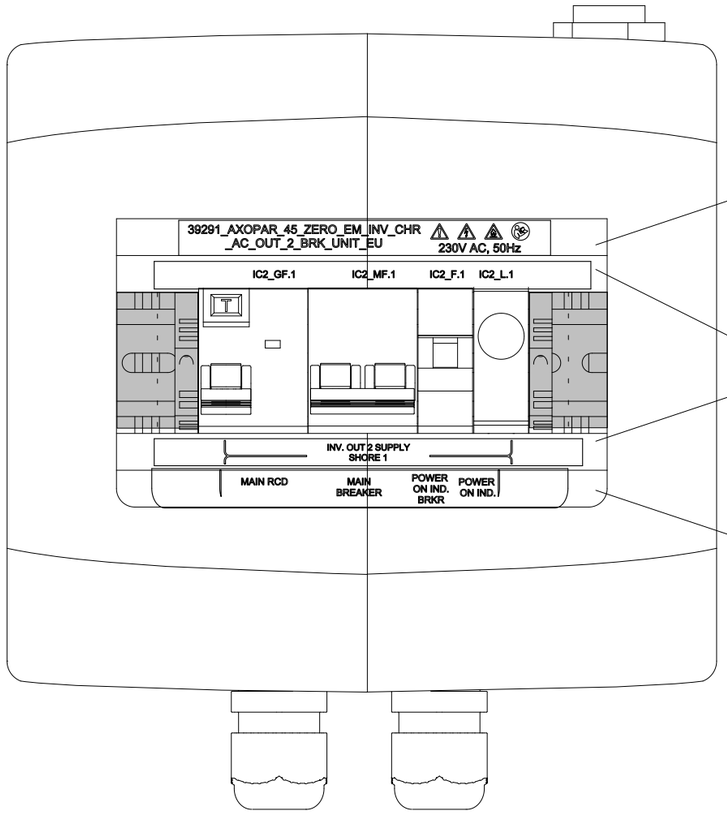

39514 LABEL SET

XXXXX LABEL 1

XXXXX LABEL 2

XXXXX LABEL 3

XXXXX LABEL 4

INCLUDED TO DELIVERY

1 x

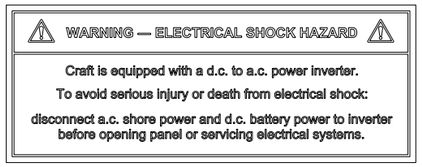

35106_NAVIX_ISO_INVERTER_CHARGER_WARNING_LABEL_V1

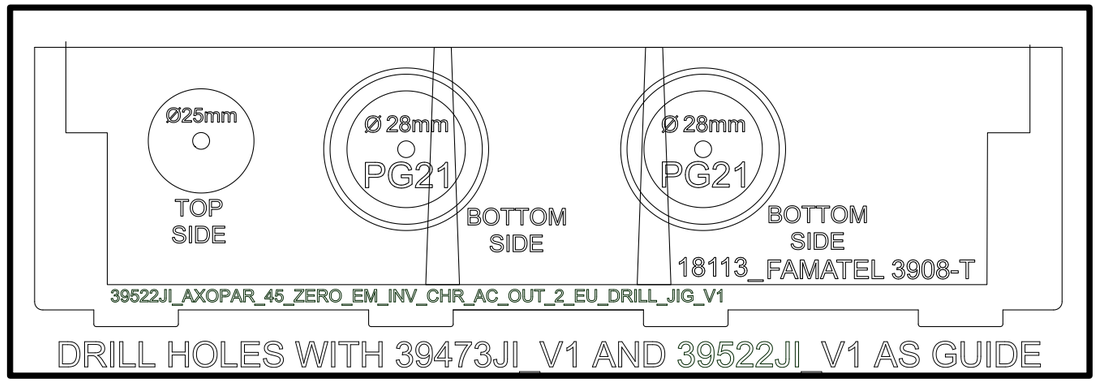

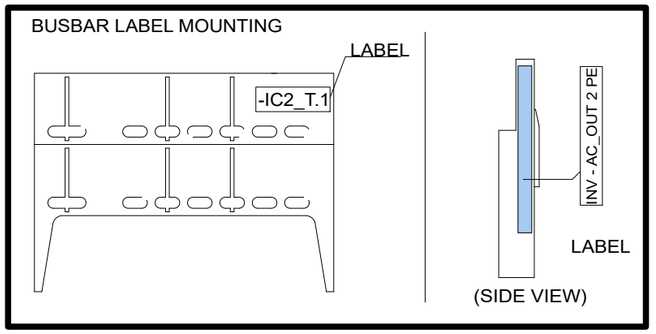

9.3.2022	Tum/VR	B1: 2004274; INTRODUCED DRAWING.	Date	8.3.2022	NAVIX	Axopar	39514	39291	
9.11.2023	PF	C2: 2004890; End clamps added	Drawing by	TuM		Boat	Sub-product code	Product code	Project ID
			Sheet rev.	2		45	ZERO EM INV/CHR AC OUT 2 BRK UNIT - EU	HL	378 / 444
Date of modification	Modified by	Description	Project rev.	C	Copyright by	Boat model	Title	Loc	Sheet

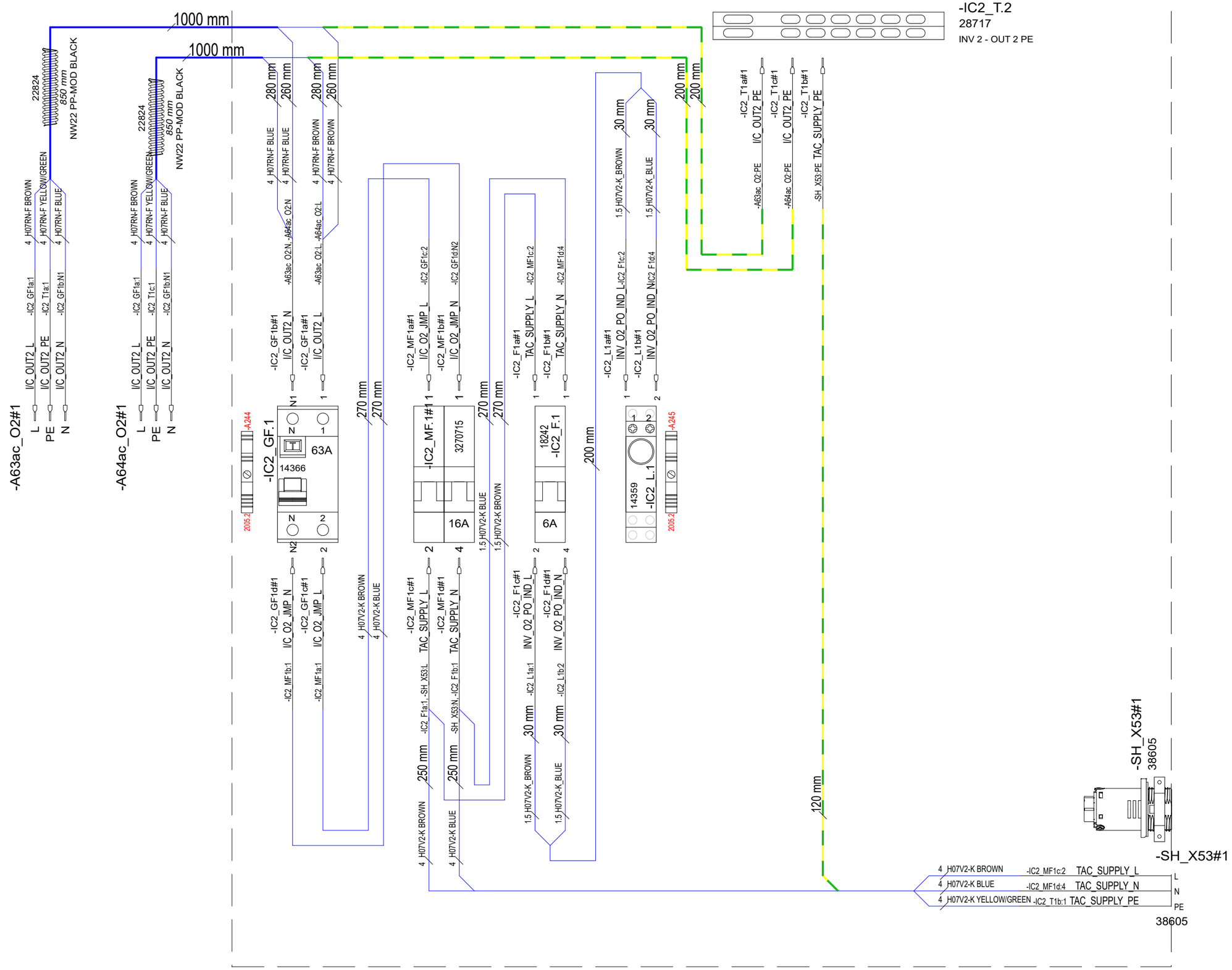

Date of modification	Modified by	Description
9.3.2022	Tum/VR	B1: 2004274; INTRODUCED DRAWING.
9.11.2023	PF	C2: 2004890; End clamps added

Date	8.3.2022
Drawing by	TuM
Sheet rev.	2
Project rev.	C

NAVIX
Copyright by

Axopar Boat	39514 Sub-product code	39291 Product code	Project ID
45 Boat model	ZERO EM INV/CHR AC OUT 2 BRK UNIT - EU Title	HL Loc	379 / 444 Sheet

SPC TARKASTUSPÖYTÄKIRJA
SPC INSPECTION SHEET

TUOTE TARRA /
PRODUCT LABEL

* PPKKVV-JÄRJESTYSNUMERO / DDMMYY-RUNNING NUMBER (Esim. 11. maaliskuuta 2013 tehty tuote on sarjanumeroltaan 110313-01, seuraava on 110313-02 jne.)

SARJANUMERO* / SERIAL NUMBER*						
JOHDOT KIINNI OIKEIN / CORRECT CONNECTIONS						
MAADOITUS TULEVAT JA LÄHTEVÄT / GROUND CONNECTION IN AND OUT						
VVS JA TOTSIT I-ASENNOSSA / RCBO AND CIRCUIT BREAKERS IN I-POSITION						
ERISTYSVASTUS (mA) max lukema ** / ISOLATION RESISTOR (mA) max **						
MAAPIIRI 10A (Ohm) max lukema ** / GROUND CIRCUIT 10A (Ohm) max **						
TOIMINNALLINEN JA VVS TESTAUS / FUNCTIONAL AND RCBO TEST						
SARJANUMERO TARRA / SERIAL NUMBER STICKER						
PVM / DATE						
TESTASI / TESTED BY						

Tehty CENELEC EN 50106 mukaan / Made according to CENELEC EN 50106

**ERISTYSVASTUS JA MAAPIIRI TESTATTAVA JOKAISEEN SISÄÄNTULOON JA ULOSMENOON / ISOLATION RESISTOR AND GROUND CIRCUIT SHOULD BE TESTED FOR EVERY IN AND OUT

RAJA-ARVOT / LIMITS:

ERISTYSVASTUS / ISOLATING RESISTOR 1000V = <20mA

MAAPIIRI / GROUND CIRCUIT 10A = <0,2 Ohm

Date of modification	Modified by	Description
9.3.2022	Tum/VR	B1: 2004274; INTRODUCED DRAWING.
9.11.2023	PF	C2: 2004890; End clamps added

Date 8.3.2022
Drawing by TuM
Sheet rev. 2
Project rev. C

Copyright by NAVIX

Axopar — Boat
45 — Boat model
39514 — Sub-product code
39291 — Product code
Project ID
ZERO EM INV/CHR AC OUT 2 BRK UNIT - EU — Title
HL — Loc
380 / 444 — Sheet

GENERAL LAYOUT/ LABEL INSTALLATION

39292 Axopar 45 ZERO EM INV/CHR AC OUT 1 BRK UNIT - USA

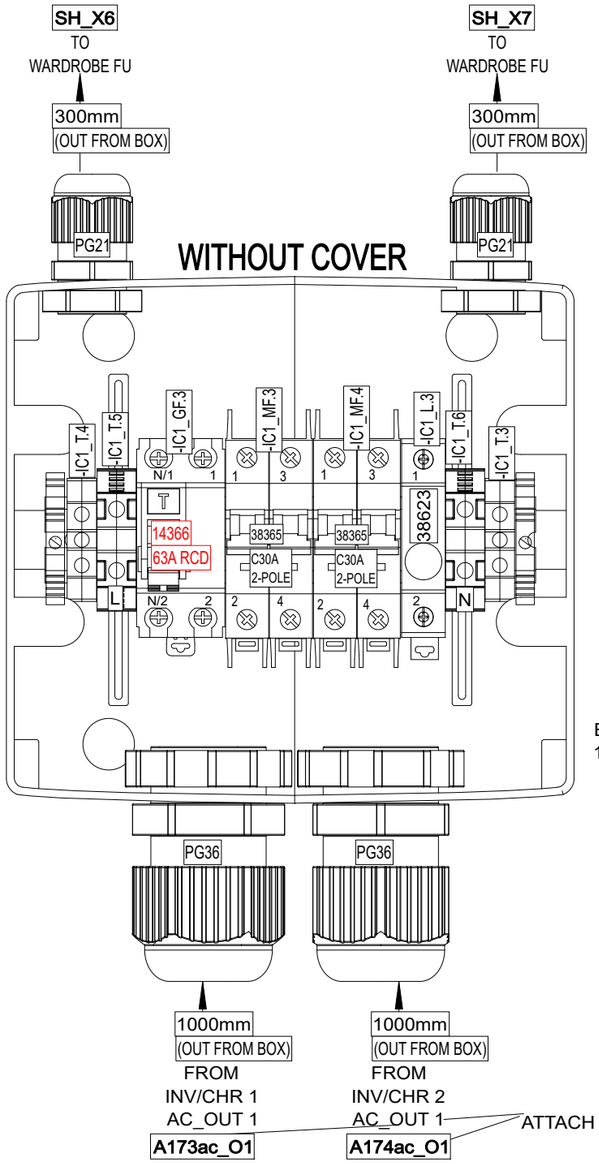

ENCLOSURE:
18113 (8-mod)

ATTACH LABEL TO THE END OF THE CABLE

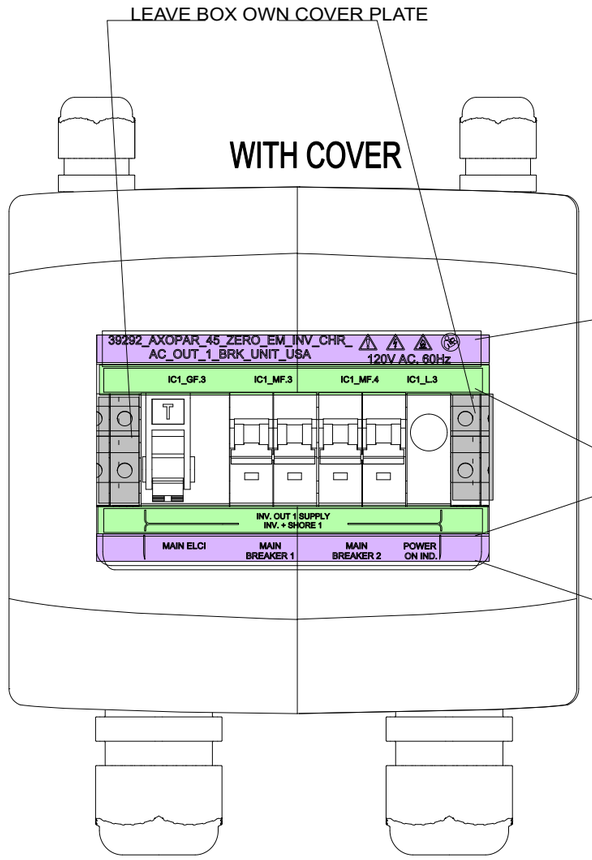

39485_AXOPAR_45_ZERO_EM_INV_CHR_AC
_OUT_1_USA_LAB_SET_V1

LABEL 1

LABEL 2

LABEL 3

LABEL 4

FOR HOLE DRILLING USE 39484JI_AXOPAR_45_ZERO_EM_INV_CHR_AC_OUT_1_USA_DRILL_JIG_V1

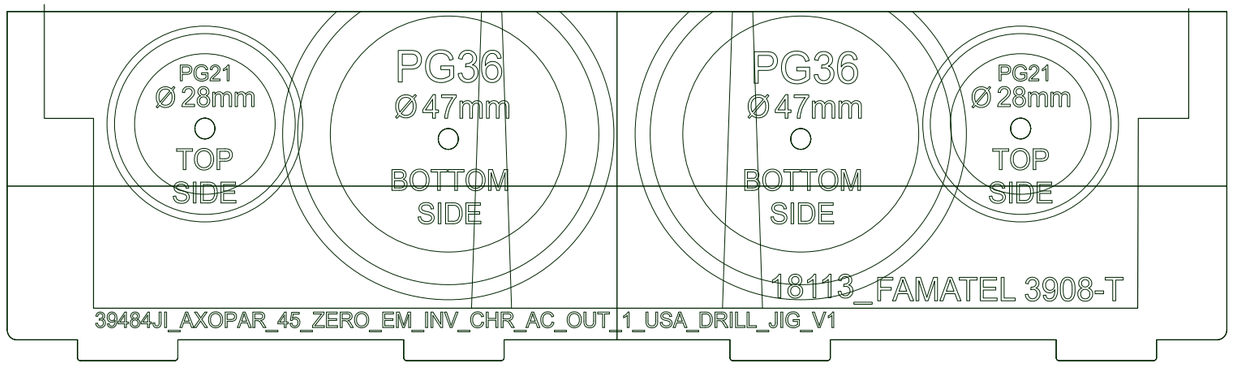

INCLUDED TO DELIVERY

1 x

⚠ WARNING

High Voltage
Avoid serious injury or death from electrical shock.
Disconnect AC shore power and DC battery power to inverter before opening panel.

34599_NAVIX_ABYC_INVERTER_CHARGER_WARNING_LABEL_V1

Date of modification	Modified by	Description
21.8.2023	TuM/VR	B1: 2004274; INTRODUCED DRAWING, e.g. ADDED CABLES
9.11.2023	PF/TuM	C2: 2004890; End clamps added, 2005065: IC1_GF3 TYPE CHANGED TO 14366 RCD

Date 28.3.2023
Drawing by TUM
Sheet rev. 2
Project rev. C

NAVIX
Copyright by

Boat	Sub-product code	Product code	Project ID
Axopar		39292	
45	ZERO EM INV/CHR AC OUT 1 BRK UNIT - USA		
Boat model	Title	Loc	Sheet
		HL	381/ 444

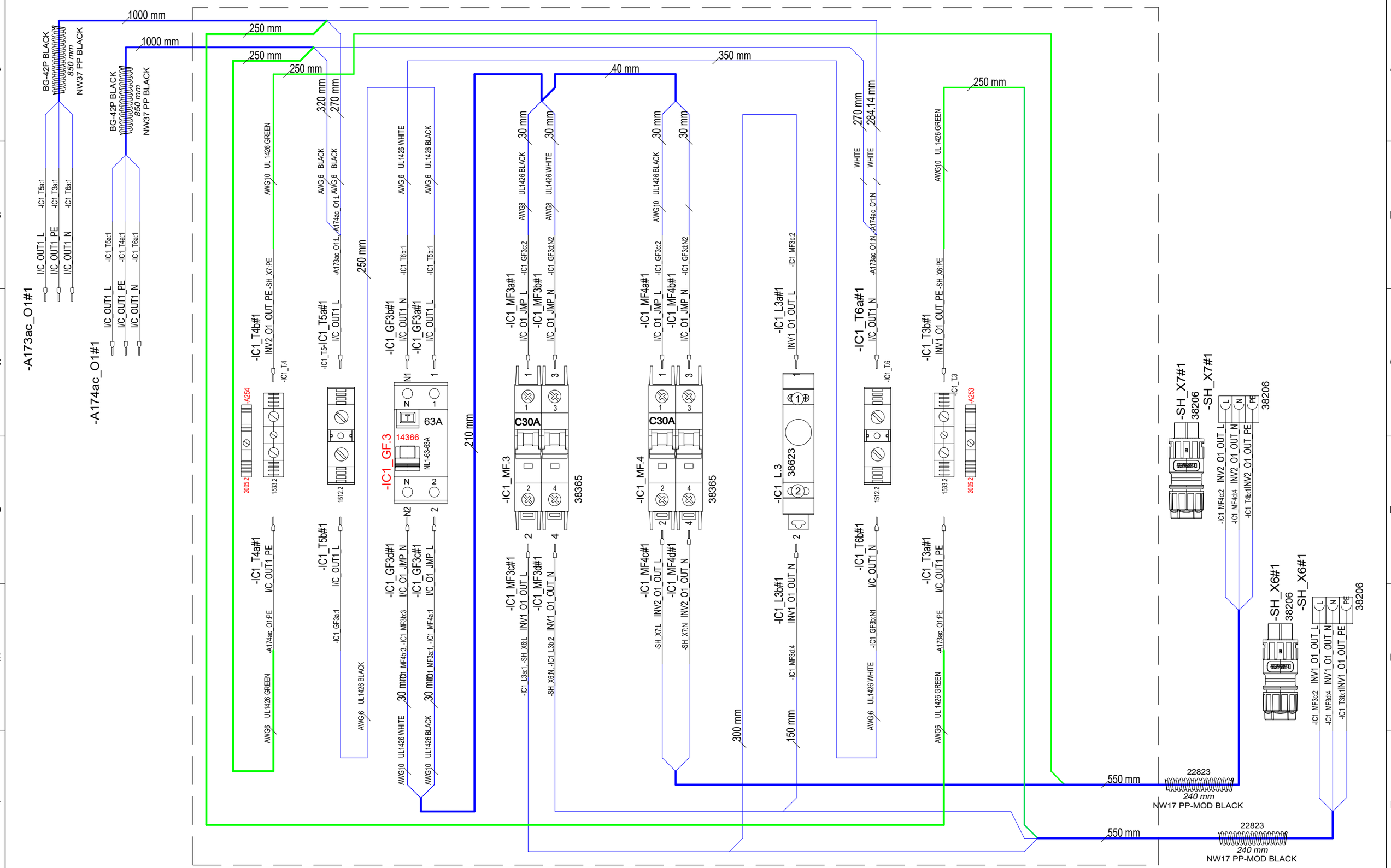

21.8.2023	TuM/VR	B1: 2004274; INTRODUCED DRAWING, e.g. ADDED CABLES	Date	28.3.2023	NAVIX	Axopar	
9.11.2023	PF/TuM	C2: 2004890; End clamps added, 2005065: IC1_GF3 TYPE CHANGED TO 14366 RCDM	Drawing by	TuM		Boat	Sub-product code / Product code / Project ID
			Sheet rev.	2		45	39292
Date of modification	Modified by	Description	Project rev.	C	Copyright by	Boat model	Title: ZERO EM INV/CHR AC OUT 1 BRK UNIT - USA; Loc: HL; Sheet: 382 / 444

USA SPC INSPECTION SHEET

PRODUCT LABEL

* DDMMYY-RUNNING NUMBER (For example. 11th March 2019 made product has serial number 110319-01, next is 110319-02 etc.)

	SERIAL NUMBER*						
VISUAL/ MANUAL	1. PERFORM FULL SYSTEM TEST -LABEL IN PLACE						
	2. CORRECT COMPONENTS AND CONNECTIONS						
	3. GROUND CONNECTION IN AND OUT						
	4. RCBO AND CIRCUIT BREAKERS IN I-POSITION						
TESTER	5. ISOLATION RESISTANCE (mA) max **						
	6. GROUND CIRCUIT 10A (Ohm) max **						
	7. RCD TEST, (ms @30mA) max						
	8. POLARITY TEST, PASS or FAIL **						
115Vac VOLTAGE LIVE	9. FUNCTIONAL AND RCD*** TEST, PASS or FAIL						
	SERIAL NUMBER STICKER						
	DATE						
	TESTED BY						

Made according to CENELEC EN 50106:2008 WITH ADDITION OF (8) POLARITY TEST AND (9) 115Vac FUNCTIONAL AND RCD TEST

** (5) ISOLATION RESISTANCE, (6) GROUND CIRCUIT AND (8) POLARITY TEST SHOULD BE TESTED FOR EVERY IN AND OUT

*** (9) RDC TEST-BUTTON OPERATION VERIFICATION

LIMITS:

ISOLATING RESISTOR 1000V = <5mA

GROUND CIRCUIT 10A = <0,2 Ohm

RDC TEST, Time <100mS @30mA

REVISION B

Date of modification	Modified by	Description
21.8.2023	TuM/VR	B1: 2004274; INTRODUCED DRAWING, e.g. ADDED CABLES
9.11.2023	PF/TuM	C2: 2004890; End clamps added, 2005065: IC1_GF3 TYPE CHANGED TO 14366 RDM

Date 28.3.2023

Drawing by TUM

Sheet rev. 2

Project rev. C

Copyright by NAVIX

Boat: Axopar

Boat model: 45

Sub-product code:

Product code: 39292

Project ID:

Title: ZERO EM INV/CHR AC OUT 1 BRK UNIT - USA

Loc: HL

GENERAL LAYOUT/ LABEL INSTALLATION

39293 Axopar 45 ZERO EM INV/CHR AC OUT 2 BRK UNIT - USA

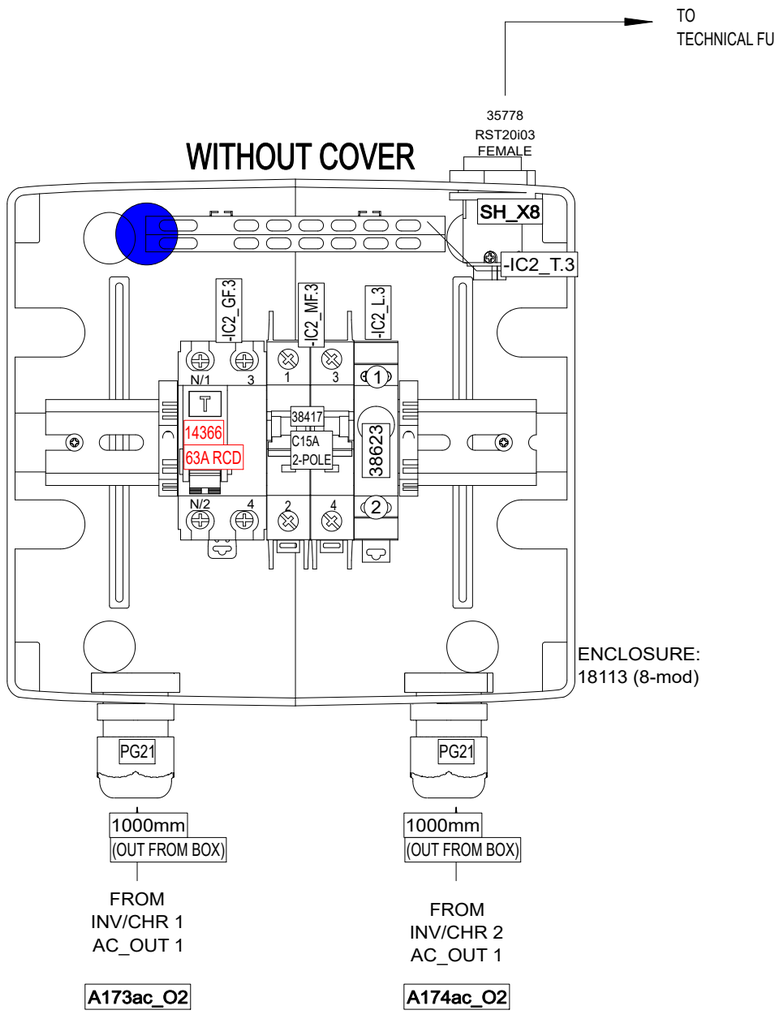

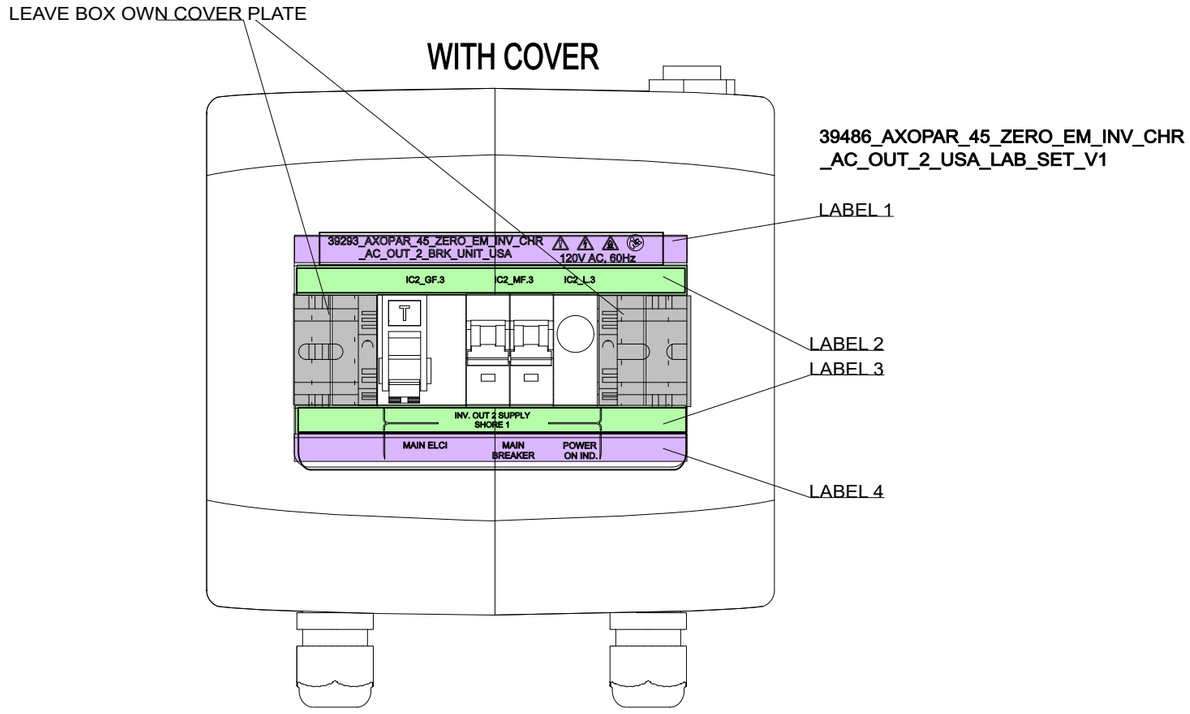

INCLUDED TO DELIVERY

1 x

⚠ WARNING

High Voltage

Avoid serious injury or death from electrical shock.
Disconnect AC shore power and DC battery power to inverter before opening panel.

34599_NAVIX_ABYC_INVERTER_CHARGER_WARNING_LABEL_V1

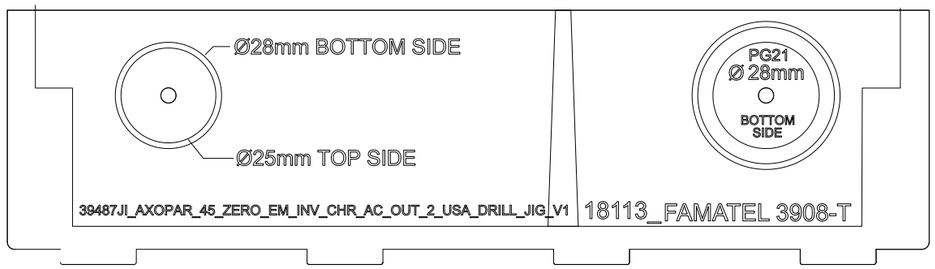

DRILL HOLES WITH 39473JI_V1 AND 39487JI_V1 AS GUIDE

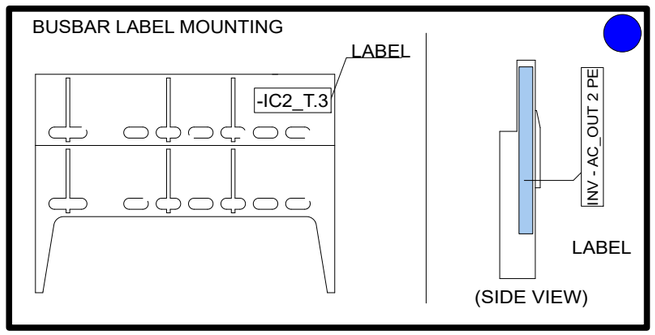

			Date 17.8.2023	NAVIX	Axopar		
21.8.2023	TuM/VR	B1: 2004274; INTRODUCED DRAWING, e.g. ADDED CABLES	Drawing by TuM		Boat	Sub-product code 39293 Product code	Project ID
30.5.2024	TuM	C2: 2005065: IC1_GF3 TYPE CHANGED TO 14366 RCD.	Sheet rev. 2		45	ZERO EM INV/CHR 2 AC MAIN BRK UNIT - USA	HL
Date of modification	Modified by	Description	Project rev. C	Copyright by	Boat model	Title	Loc / Sheet 384 / 444

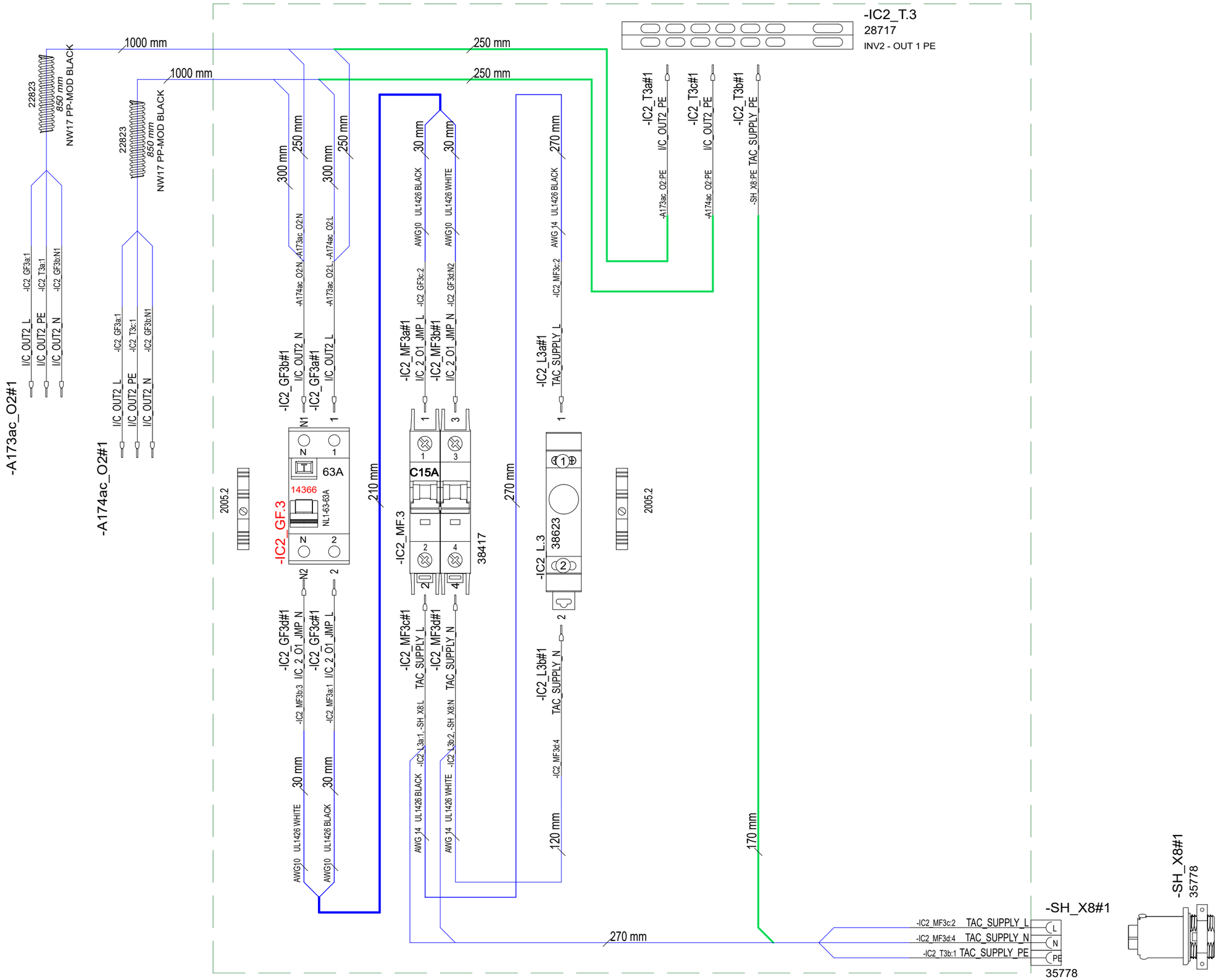

			Date 28.3.2023	NAVIX	Axopar		
21.8.2023	TuM/VR	B1: 2004274; INTRODUCED DRAWING, e.g. ADDED CABLES	Drawing by TuM		Boat	38564 Sub-product code	39293 Product code	Project ID
30.5.2024	TuM	C2: 2005065: IC1_GF3 TYPE CHANGED TO 14366 RCD.	Sheet rev. 2		45	ZERO EM INV/CHR 2	HL	
Date of modification	Modified by	Description	Project rev. C	Copyright by	Boat model	AC MAIN BRK UNIT - USA Title	Loc	385 / 444 Sheet

USA SPC INSPECTION SHEET

PRODUCT LABEL

* DDMMYY-RUNNING NUMBER (For example. 11th March 2019 made product has serial number 110319-01, next is 110319-02 etc.)

	SERIAL NUMBER*						
VISUAL/ MANUAL	1. PERFORM FULL SYSTEM TEST -LABEL IN PLACE						
	2. CORRECT COMPONENTS AND CONNECTIONS						
	3. GROUND CONNECTION IN AND OUT						
	4. RCBO AND CIRCUIT BREAKERS IN I-POSITION						
TESTER	5. ISOLATION RESISTANCE (mA) max **						
	6. GROUND CIRCUIT 10A (Ohm) max **						
	7. RCD TEST, (ms @30mA) max						
	8. POLARITY TEST, PASS or FAIL **						
115Vac VOLTAGE LIVE	9. FUNCTIONAL AND RCD*** TEST, PASS or FAIL						
	SERIAL NUMBER STICKER						
	DATE						
	TESTED BY						

Made according to CENELEC EN 50106:2008 WITH ADDITION OF (8) POLARITY TEST AND (9) 115Vac FUNCTIONAL AND RCD TEST

** (5) ISOLATION RESISTANCE, (6) GROUND CIRCUIT AND (8) POLARITY TEST SHOULD BE TESTED FOR EVERY IN AND OUT

*** (9) RDC TEST-BUTTON OPERATION VERIFICATION

LIMITS:

ISOLATING RESISTOR 1000V = <5mA

GROUND CIRCUIT 10A = <0,2 Ohm

RDC TEST, Time <100mS @30mA

REVISION B

Date of modification	Modified by	Description	Date	18.8.2023	Copyright by	Boat	Sub-product code	Product code	Project ID
21.8.2023	TuM/VR	B1: 2004274; INTRODUCED DRAWING, e.g. ADDED CABLES	Drawing by	TuM	NAVIX	Axopar		39293	
30.5.2024	TuM	C2: 2005065: IC1_GF3 TYPE CHANGED TO 14366 RCD.	Sheet rev.	2		45	ZERO EM INV/CHR 2 AC MAIN BRK UNIT - USA	HL	386 / 444
			Project rev.	C		Boat model	Title	Loc	Sheet

GENERAL LAYOUT

39294 Axopar 45 FENDERBOX GRILL CABLES - EU

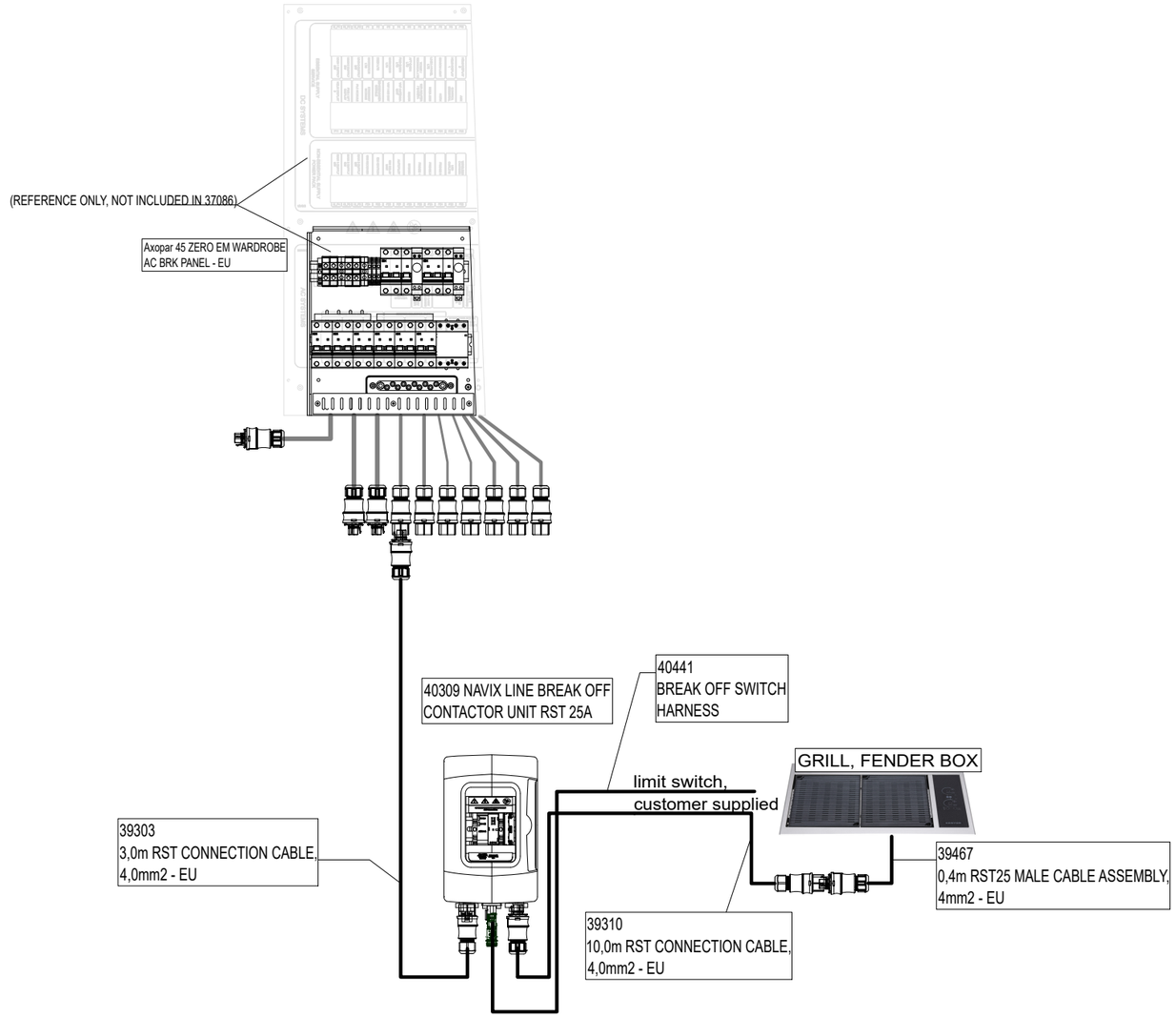

NOTE.
PACK ALL ITEMS TO SAME PACKAGE.

Date of modification	Modified by	Description
12.9.2023	TuM	B1: 2004274; INTRODUCED DRAWING.
5.12.2023	PF	C2: 2004890; Changed break off switch to contactor/switch combination

Date	12.9.2023
Drawing by	TuM
Sheet rev.	2
Project rev.	C

Copyright by

Axopar (Boat)		39294 (Product code)	(Project ID)
45 (Boat model)	FENDERBOX GRILL CABLES - EU (Title)	HL (Loc)	387 / 444 (Sheet)

NOTICE! CABLES WITH STICKER

FOR EXAMPLE

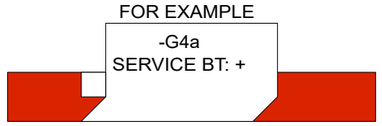

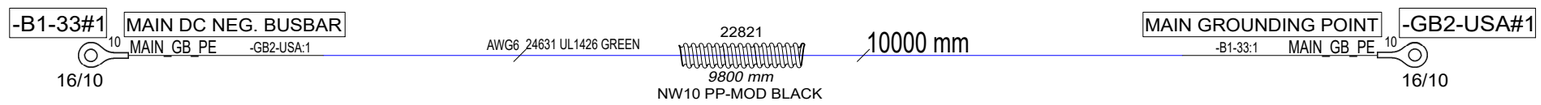

30.5.2024	TuM	C1: 2005065; NOT MODIFIED.	Date 21.8.2023	NAVIX Copyright by	Axopar Boat		39295 Product code	Project ID
			Drawing by TuM					
21.8.2023	TuM	B1: 2004274; INRODUCED DRAWING.	Sheet rev. 1		45 Boat model	MAIN GROUNDING CABLES - USA Title	HE Loc	388 / 444 Sheet
Date of modification	Modified by	Description	Project rev. C					

GENERAL LAYOUT

39296 Axopar 45 ZERO EM SECOND 120VAC SHORE LINE - USA

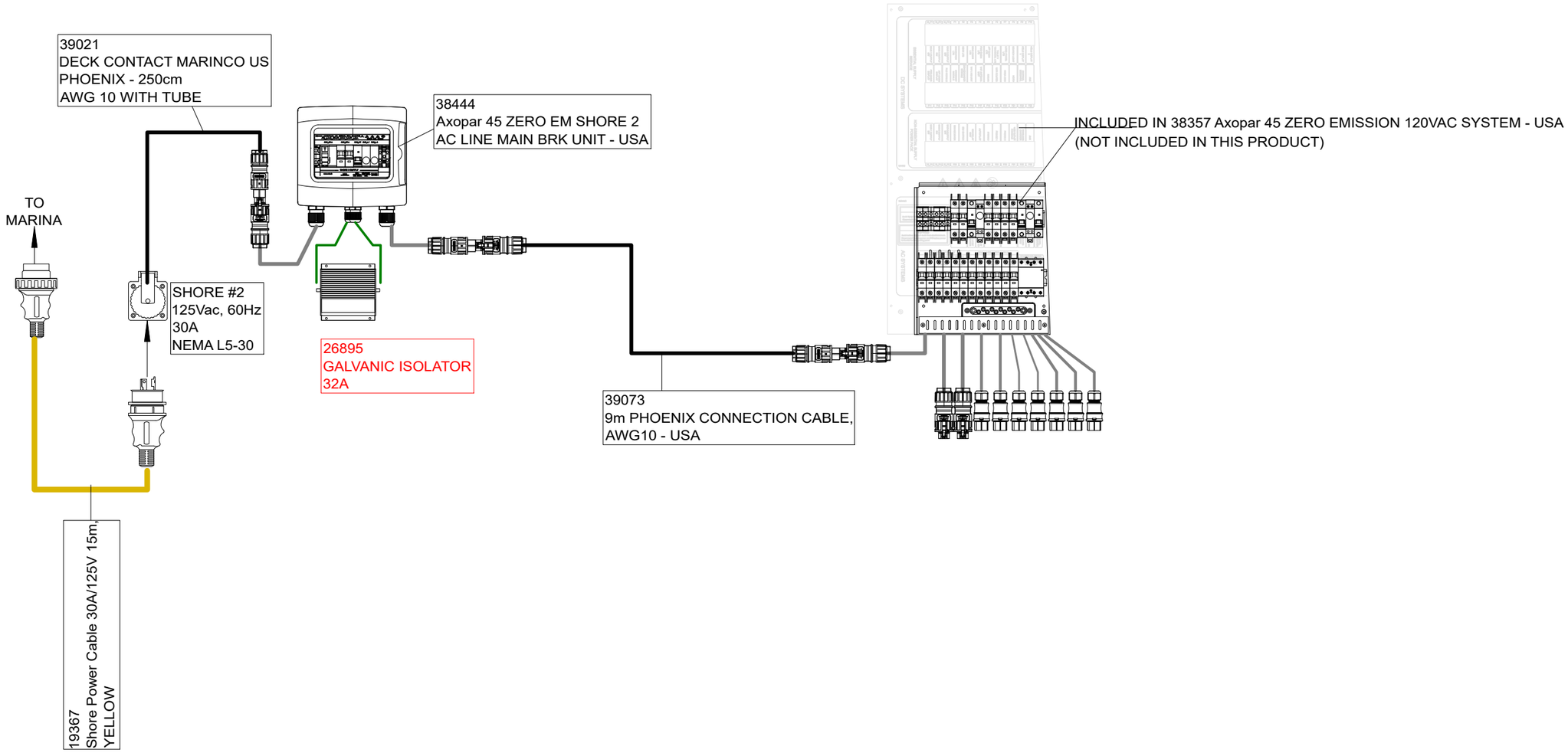

NOTE.
PACK ALL ITEMS TO SAME PACKAGE.

Date of modification	Modified by	Description
21.8.2023	TuM	B1: 2004274; INTRODUCED DRAWING
28.5.2024	TuM	C2: 2005065: Galvanic isolator changed 30A -->32A.

Date	21.8.2023
Drawing by	TuM
Sheet rev.	2
Project rev.	C

Copyright by

NAVIX

Axopar		39296	
Boat	Sub-product code	Product code	Project ID
45	ZERO EM SECOND 120VAC SHORE LINE - USA	HL	389 / 444
Boat model	Title	Loc	Sheet

GENERAL LAYOUT

39297 Axopar 45 FRONT CABIN A/C CABLES - USA

INCLUDED IN 38357 Axopar 45 ZERO EMISSION 120VAC SYSTEM - USA
(NOT INCLUDED IN THIS PRODUCT)

39314
3m RST CONNECTION CABLE
AWG12 - USA

39464
0,4m RST25 MALE CABLE ASSEMBLY
AWG12 - USA

A/C UNIT #3
CONNECTION
BOX

39684
Axopar 45 A/C UNIT 3
CONNECTION CABLES - USA

AWG14 - 1,5m

AWG14 - 1m

A/C UNIT #3
FWD CABIN

12Vdc

SEA WTR PUMP
RELAY BOX

12Vdc

SEA WATER PUMP

NOTE.
PACK ALL ITEMS TO SAME PACKAGE.

30.5.2024	TuM	C1: 2005065; NOT MODIFIED.	Date	21.8.2023	NAVIX	Axopar		39297	
			Drawing by	TuM		Boat	Sub-product code	Product code	Project ID
21.8.2023	TuM	B1: 2004274; INTRODUCED DRAWING.	Sheet rev.	1		45	FRONT CABIN A/C CABLES - USA		
Date of modification	Modified by	Description	Project rev.	C	Copyright by	Boat model	Title	HL Loc	390 / 444 Sheet

GENERAL LAYOUT

39298 Axopar 45 WHEEL HOUSE A/C CABLES - USA

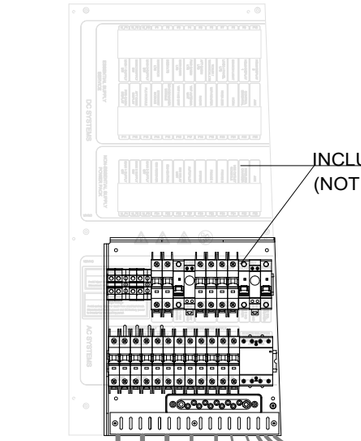

INCLUDED IN 38357 Axopar 45 ZERO EMISSION 120VAC SYSTEM - USA
(NOT INCLUDED IN THIS PRODUCT)

39319
8m RST CONNECTION CABLE
AWG12 - USA

39464
0,4m RST25 MALE CABLE ASSEMBLY
AWG12 - USA

39464
0,4m RST25 MALE CABLE ASSEMBLY
AWG12 - USA

A/C UNIT #1
CONNECTION
BOX

A/C UNIT #2
CONNECTION
BOX

39682
Axopar 45 A/C UNIT 1
CONNECTION CABLES - USA

39683
Axopar 45 A/C UNIT 2
CONNECTION CABLES - USA

AWG14 - 1,5m

AWG14 - 6m

AWG14 - 1,5m

AWG14 - 1m

39317
6m RST CONNECTION CABLE
AWG12 - USA



A/C UNIT #1
MAIN CABIN



A/C UNIT #2
MAIN CABIN



SEA WTR PUMP
RELAY BOX

12Vdc

12Vdc



SEA WATER PUMP

NOTE.
PACK ALL ITEMS TO SAME PACKAGE.

30.5.2024	TuM	C1: 2005065; NOT MODIFIED.	Date	21.8.2023	NAVIX	Axopar		39298	
			Drawing by	TuM		Boat	Sub-product code	Product code	Project ID
21.8.2023	TuM	B1: 2004274; INTRODUCED DRAWING.	Sheet rev.	1		45	WHEEL HOUSE A/C CABLES - USA	HL	391/ 444
Date of modification	Modified by	Description	Project rev.	C	Copyright by	Boat model	Title	Loc	Sheet

GENERAL LAYOUT

39299 Axopar 45 FENDERBOX GRILL CABLES - USA

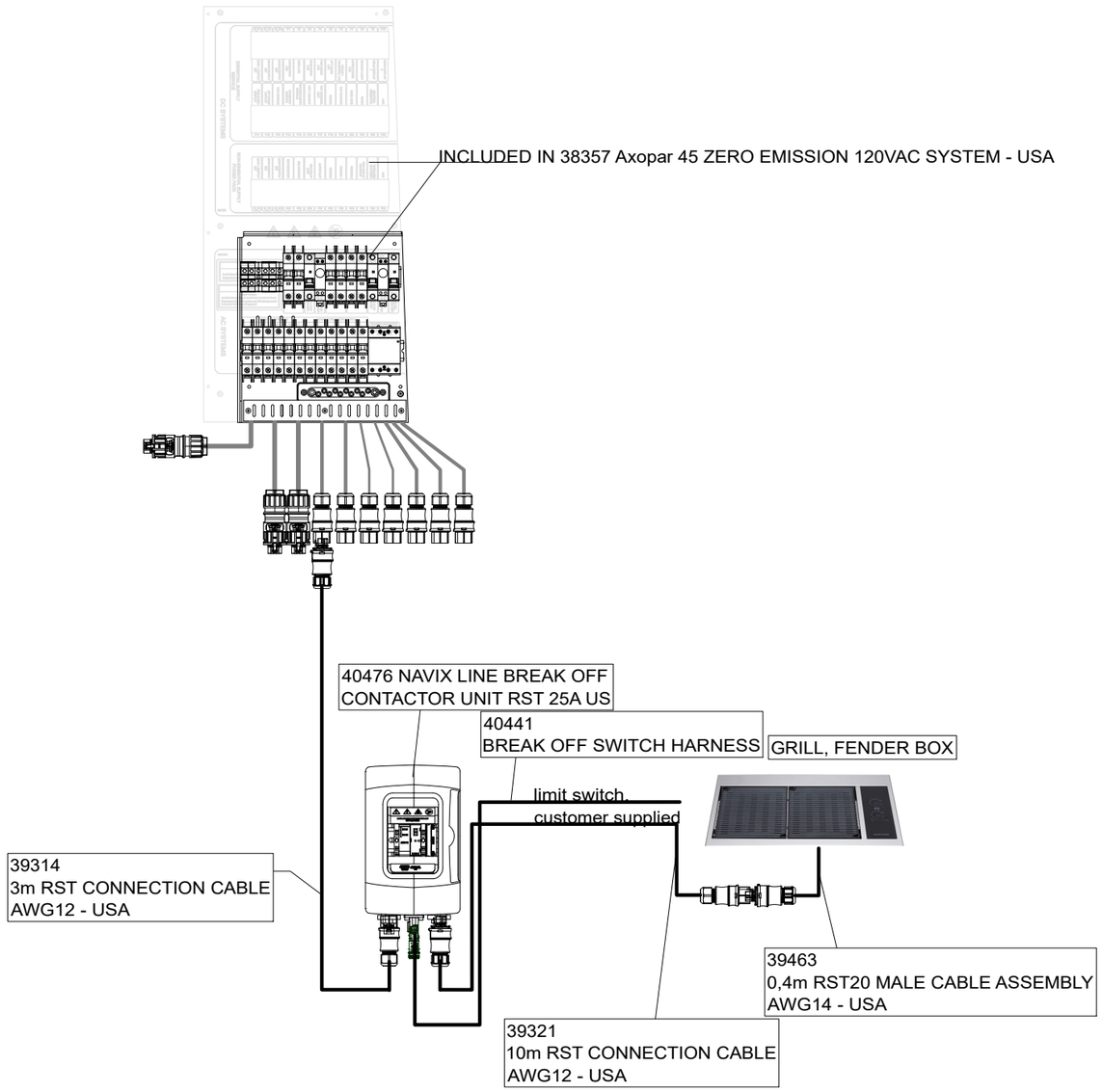

NOTE.
PACK ALL ITEMS TO SAME PACKAGE.

5.12.2023	PF	C2: 2004890; Changed break off switch to contactor/switch combination	Date	21.8.2023	NAVIX	Axopar		39299	
			Drawing by	TuM		Boat	Sub-product code	Product code	Project ID
21.8.2023	TuM	B1: 2004274; INTRODUCED DRAWING.	Sheet rev.	2		45	FENDERBOX GRILL CABLES - USA	HL	392 / 444
Date of modification	Modified by	Description	Project rev.	C	Copyright by	Boat model	Title	Loc	Sheet

GENERAL LAYOUT/ LABEL INSTALLATION

39406 Axopar 45 STANDARD SHORE LINE 1 AC MAIN BRK UNIT - EU

WITHOUT COVER

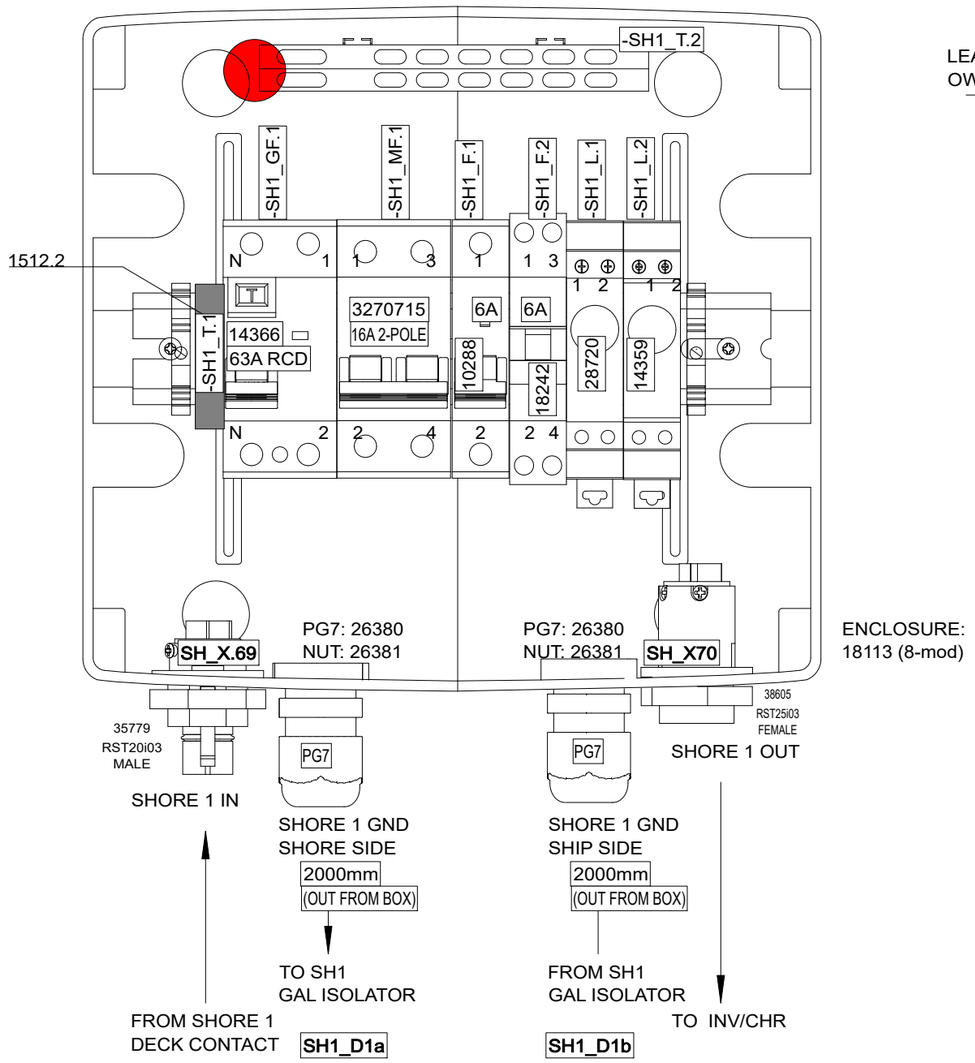

ENCLOSURE:
18113 (8-mod)

WITH COVER

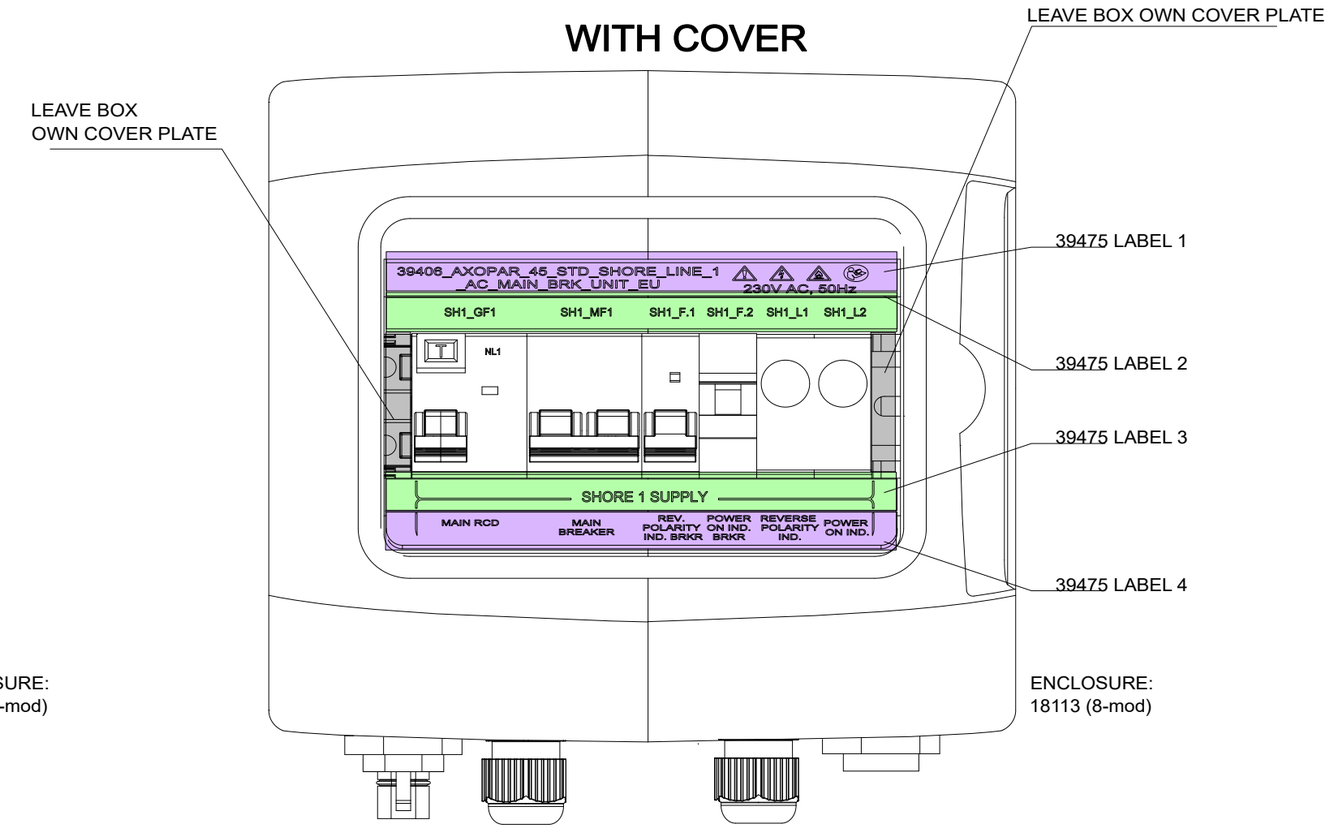

ENCLOSURE:
18113 (8-mod)

INCLUDED TO DELIVERY

1 x

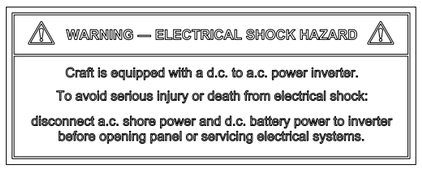

35106_NAVIX_ISO_INVERTER_CHARGER_WARNING_LABEL_V1

BUSBAR LABEL MOUNTING

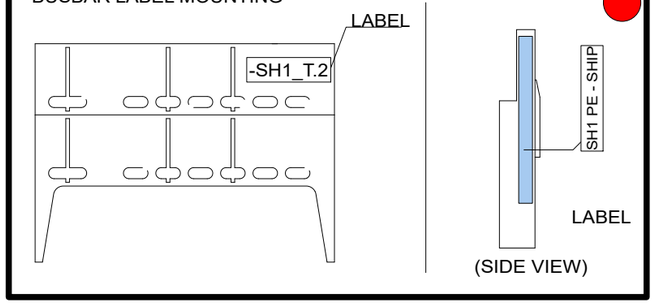

DRILL HOLES TO 18113 WITH 39473JI_V1 AND 39474JI_V1 AS GUIDE

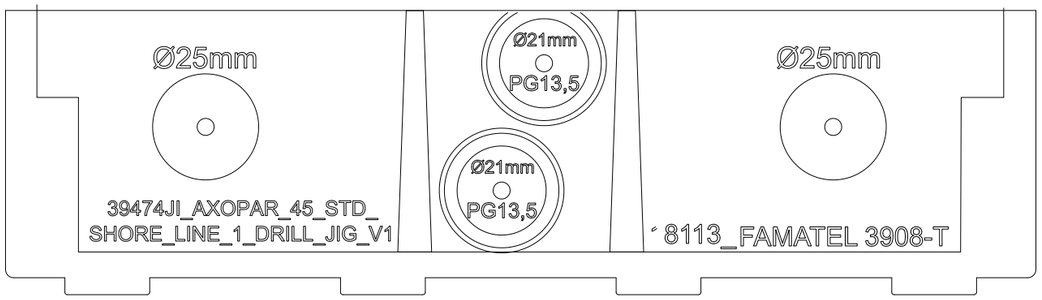

Date of modification	Modified by	Description
7.9.2023	SP	B1: 2004274; INTRODUCED DRAWING.
9.11.2023	PF	C2: 2004890; End clamps added

Date	7.9.2023
Drawing by	SP
Sheet rev.	2
Project rev.	C

Copyright by NAVIX

Axopar		39406	
Boat	Sub-product code	Product code	Project ID
45	STD SHORE LINE 1 AC MAIN BRK UNIT - EU	HL	393 / 444
Boat model	Title	Loc	Sheet

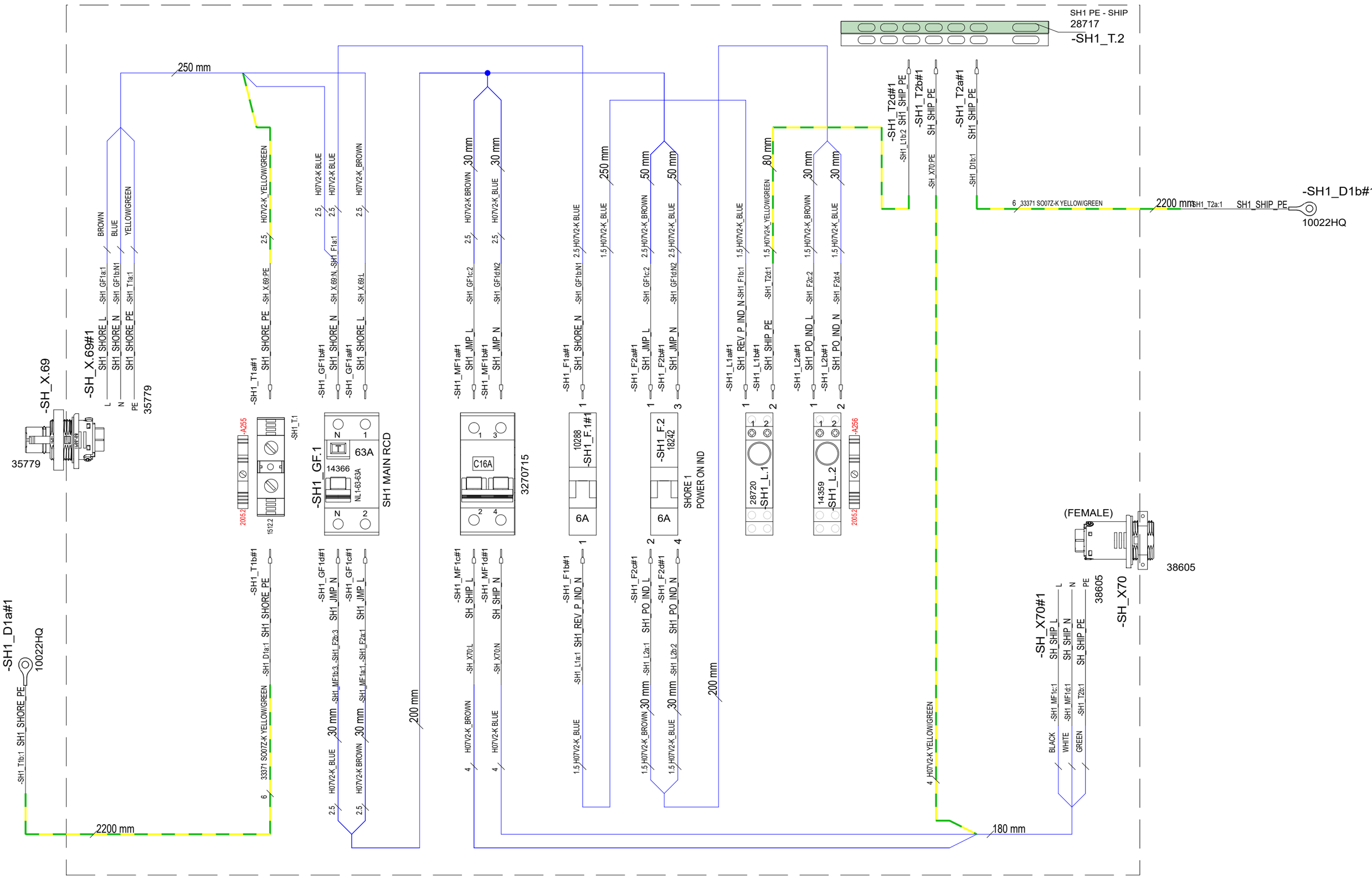

7.9.2023	SP	B1: 2004274; INTRODUCED DRAWING.	Date	7.9.2023	NAVIX	Axopar		39406	
9.11.2023	PF	C2: 2004890; End clamps added	Drawing by	SP		Boat	Sub-product code	Product code	Project ID
			Sheet rev.	2		45	STD SHORE LINE 1 AC MAIN BRK UNIT - EU	HL	394 / 444
Date of modification	Modified by	Description	Project rev.	C	Copyright by	Boat model	Title	Loc	Sheet

SPC TARKASTUSPÖYTÄKIRJA
SPC INSPECTION SHEET

TUOTE TARRA /
PRODUCT LABEL

* PPKKVV-JÄRJESTYSNUMERO / DDMMYY-RUNNING NUMBER (Esim. 11. maaliskuuta 2013 tehty tuote on sarjanumeroltaan 110313-01, seuraava on 110313-02 jne.)

SARJANUMERO* / SERIAL NUMBER*						
JOHDOT KIINNI OIKEIN / CORRECT CONNECTIONS						
MAADOITUS TULEVAT JA LÄHTEVÄT / GROUND CONNECTION IN AND OUT						
VVS JA TOTSIT I-ASENNOSSA / RCBO AND CIRCUIT BREAKERS IN I-POSITION						
ERISTYSVASTUS (mA) max lukema ** / ISOLATION RESISTOR (mA) max **						
MAAPIIRI 10A (Ohm) max lukema ** / GROUND CIRCUIT 10A (Ohm) max **						
TOIMINNALLINEN JA VVS TESTAUS / FUNCTIONAL AND RCBO TEST						
SARJANUMERO TARRA / SERIAL NUMBER STICKER						
PVM / DATE						
TESTASI / TESTED BY						

Tehty CENELEC EN 50106 mukaan / Made according to CENELEC EN 50106

**ERISTYSVASTUS JA MAAPIIRI TESTATTAVA JOKAISEEN SISÄÄNTULOON JA ULOSMENOON / ISOLATION RESISTOR AND GROUND CIRCUIT SHOULD BE TESTED FOR EVERY IN AND OUT

RAJA-ARVOT / LIMITS:

ERISTYSVASTUS / ISOLATING RESISTOR 1000V = <20mA

MAAPIIRI / GROUND CIRCUIT 10A = <0,2 Ohm

Date of modification	Modified by	Description
7.9.2023	SP	B1: 2004274; INTRODUCED DRAWING.
9.11.2023	PF	C2: 2004890; End clamps added

Date	7.9.2023
Drawing by	SP
Sheet rev.	2
Project rev.	C

Copyright by NAVIX

Axopar		39406	
Boat	Sub-product code	Product code	Project ID
45	STD SHORE LINE 1	HL	395 / 444
Boat model	Title	Loc	Sheet
	AC MAIN BRK UNIT - EU		

GENERAL LAYOUT/ LABEL INSTALLATION

39407 Axopar 45 STANDARD SHORE LINE 2 AC MAIN BRK UNIT - EU

WITHOUT COVER

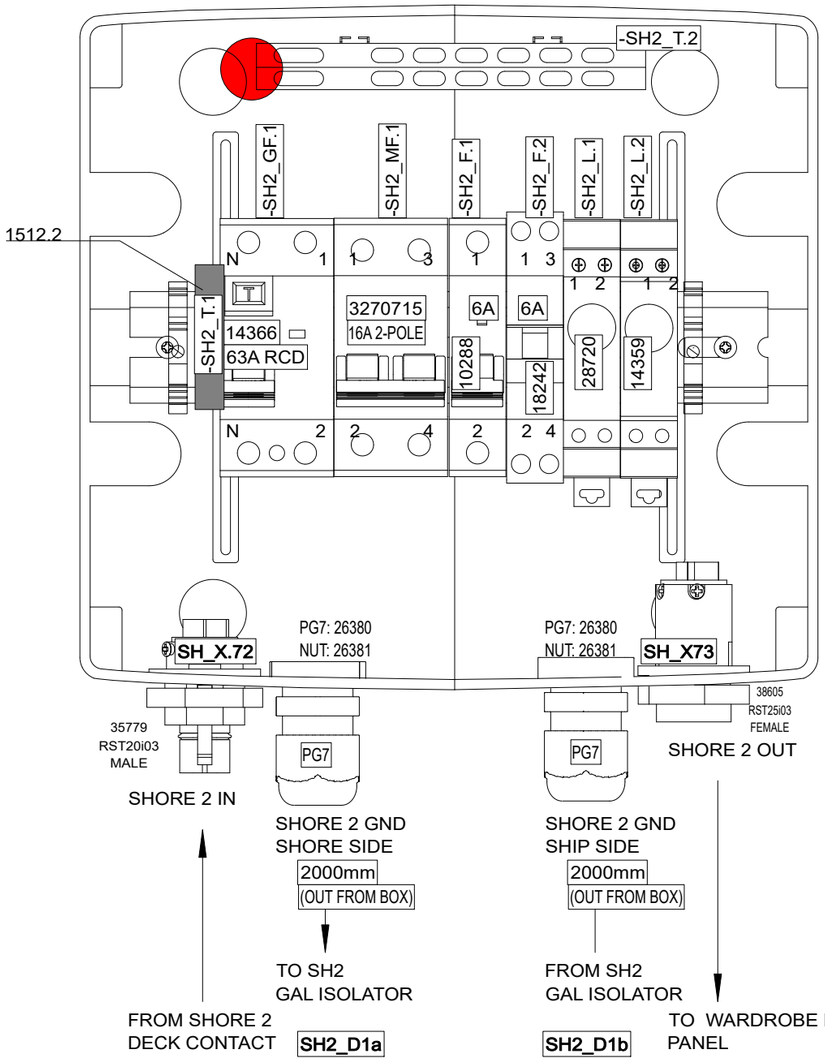

ENCLOSURE:
18113 (8-mod)

WITH COVER

LEAVE BOX
OWN COVER PLATE

LEAVE BOX OWN COVER PLATE

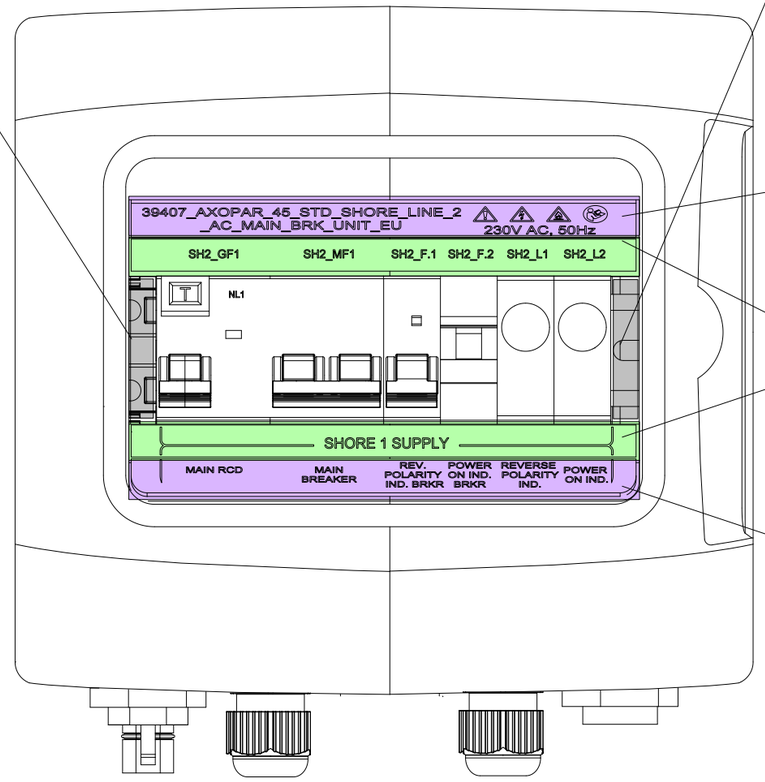

39476 LABEL 1

39476 LABEL 2

39476 LABEL 3

39476 LABEL 4

ENCLOSURE:
18113 (8-mod)

INCLUDED TO DELIVERY

1 x

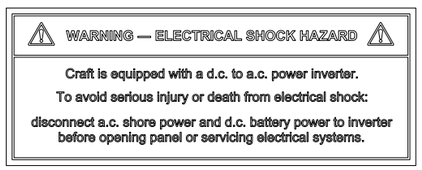

35106_NAVIX_ISO_INVERTER_CHARGER_WARNING_LABEL_V1

BUSBAR LABEL MOUNTING

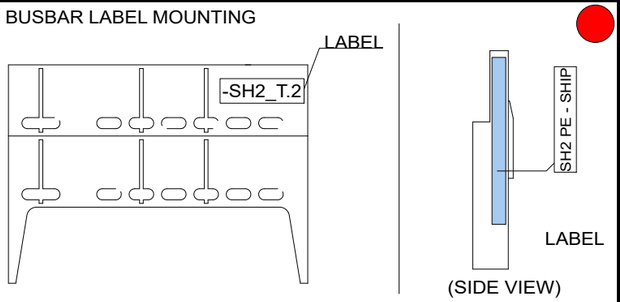

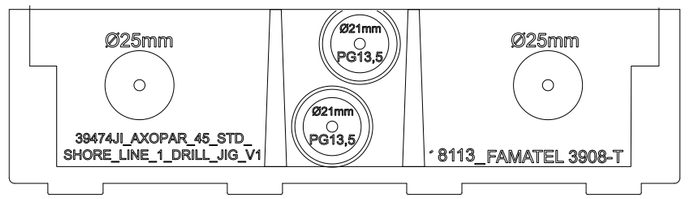

DRILL HOLES TO 18113 WITH 39473JI_V1 AND 39474JI_V1 AS GUIDE

Date of modification	Modified by	Description
7.9.2023	SP	B1: 2004274; INTRODUCED DRAWING.
9.11.2023	PF	C2: 2004890; End clamps added

Date	7.9.2023
Drawing by	SP
Sheet rev.	2
Project rev.	C

NAVIX

Copyright by

Axopar Boat		39407 Product code	Project ID
45 Boat model	STD SHORE LINE 2 AC MAIN BRK UNIT - EU Title	HL Loc	396 / 444 Sheet

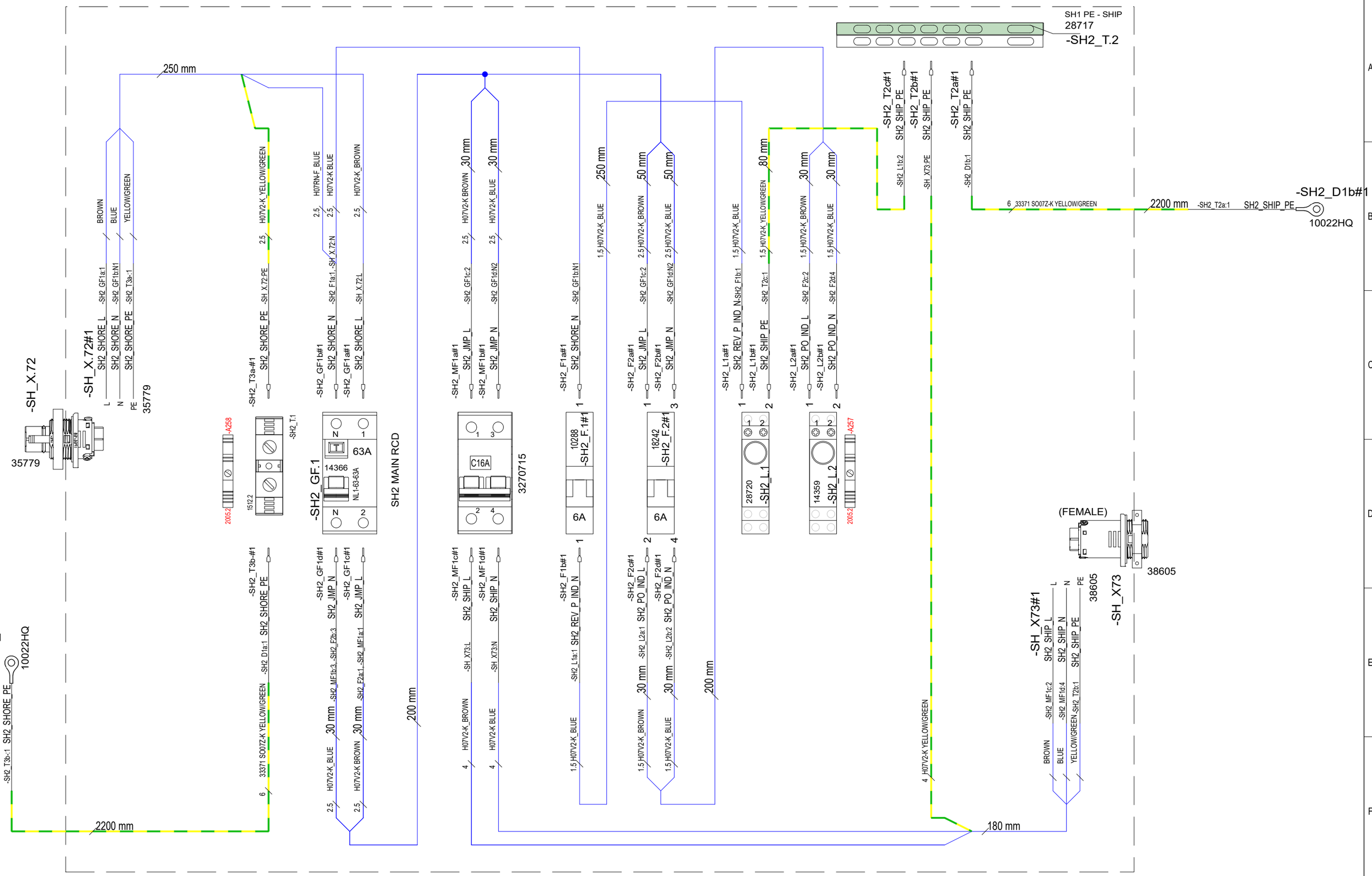

7.9.2023	SP	B1: 2004274; INTRODUCED DRAWING.	Date	7.9.2023	NAVIX	Axopar		39407	
9.11.2023	PF	C2: 2004890; End clamps added	Drawing by	SP		Boat	Sub-product code	Product code	Project ID
			Sheet rev.	2		45	STD SHORE LINE 2	HL	397 / 444
Date of modification	Modified by	Description	Project rev.	C	Copyright by	Boat model	AC MAIN BRK UNIT - EU Title	Loc	Sheet

SPC TARKASTUSPÖYTÄKIRJA
SPC INSPECTION SHEET

TUOTE TARRA /
PRODUCT LABEL

* PPKKVV-JÄRJESTYSNUMERO / DDMMYY-RUNNING NUMBER (Esim. 11. maaliskuuta 2013 tehty tuote on sarjanumeroltaan 110313-01, seuraava on 110313-02 jne.)

SARJANUMERO* / SERIAL NUMBER*						
JOHDOT KIINNI OIKEIN / CORRECT CONNECTIONS						
MAADOITUS TULEVAT JA LÄHTEVÄT / GROUND CONNECTION IN AND OUT						
VVS JA TOTSIT I-ASENNOSSA / RCBO AND CIRCUIT BREAKERS IN I-POSITION						
ERISTYSVASTUS (mA) max lukema ** / ISOLATION RESISTOR (mA) max **						
MAAPIIRI 10A (Ohm) max lukema ** / GROUND CIRCUIT 10A (Ohm) max **						
TOIMINNALLINEN JA VVS TESTAUS / FUNCTIONAL AND RCBO TEST						
SARJANUMERO TARRA / SERIAL NUMBER STICKER						
PVM / DATE						
TESTASI / TESTED BY						

Tehty CENELEC EN 50106 mukaan / Made according to CENELEC EN 50106

**ERISTYSVASTUS JA MAAPIIRI TESTATTAVA JOKAISEEN SISÄÄNTULOON JA ULOSMENOON / ISOLATION RESISTOR AND GROUND CIRCUIT SHOULD BE TESTED FOR EVERY IN AND OUT

RAJA-ARVOT / LIMITS:

ERISTYSVASTUS / ISOLATING RESISTOR 1000V = <20mA

MAAPIIRI / GROUND CIRCUIT 10A = <0,2 Ohm

Date of modification	Modified by	Description
7.9.2023	SP	B1: 2004274; INTRODUCED DRAWING.
9.11.2023	PF	C2: 2004890; End clamps added

Date 7.9.2023
Drawing by SP
Sheet rev. 2
Project rev. C

Copyright by NAVIX

Axopar — Boat
45 — Boat model
Sub-product code
39407 — Product code
Project ID
STD SHORE LINE 2
AC MAIN BRK UNIT - EU — Title
HL — Loc
398 / 444 — Sheet

GENERAL LAYOUT/ LABEL INSTALLATION

WITHOUT COVER

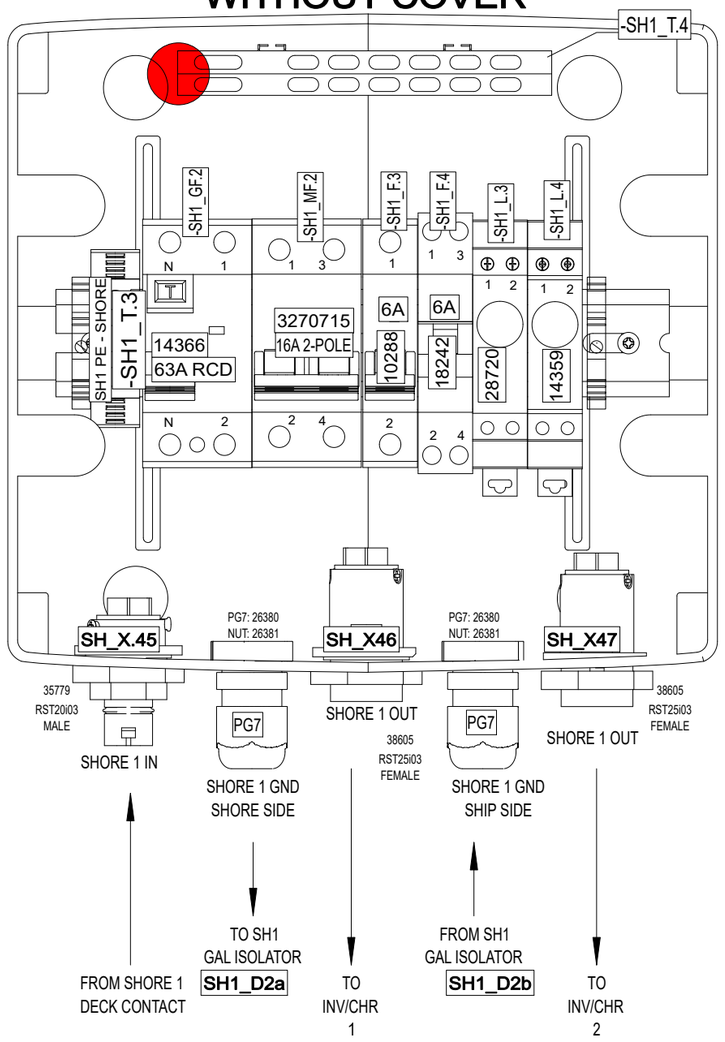

ENCLOSURE:
18113 (8-mod)

LEAVE BOX OWN COVER PLATE

LEAVE BOX OWN COVER PLATE

WITH COVER

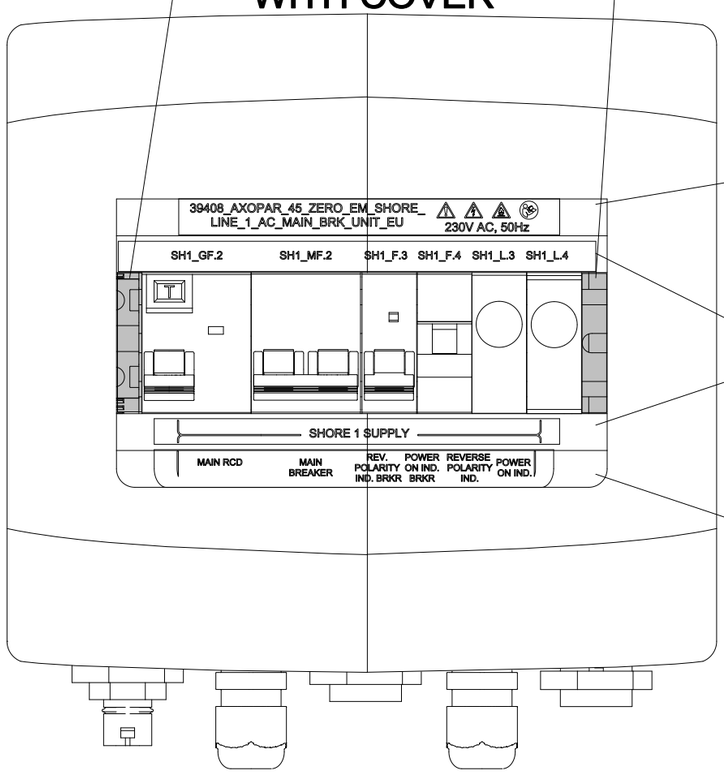

LABEL SET 39504

LABEL 1

LABEL 2

LABEL 3

LABEL 4

INCLUDED TO DELIVERY

1 x

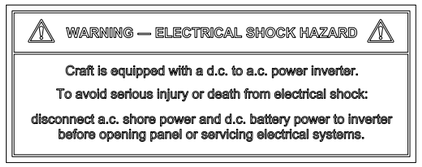

35106_NAVIX_ISO_INVERTER_CHARGER_WARNING_LABEL_V1

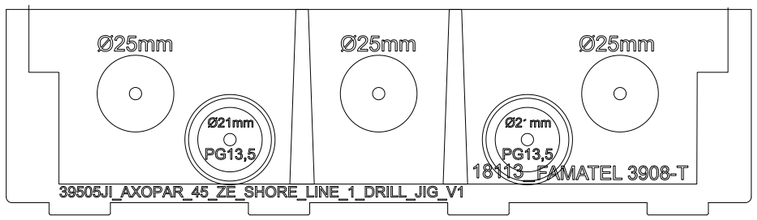

DRILL HOLES WITH 39473JI_V1 AND 39505JI_V1 AS GUIDE

BUSBAR LABEL MOUNTING

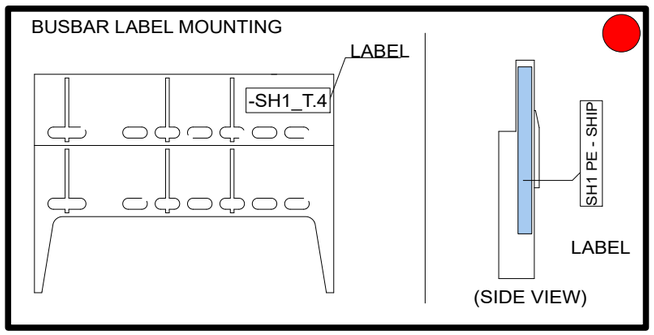

Date of modification	Modified by	Description
4.9.2023	VR	B1: 2004273; INTRODUCED DRAWING.
9.11.2023	PF	C2: 2004890; End clamps added

Date	7.3.2022
Drawing by	TuM
Sheet rev.	2
Project rev.	C

NAVIX

Copyright by

Axopar	39504	39408	
Boat	Sub-product code	Product code	Project ID
45	ZERO EM SHORE LINE 1 AC MAIN BRK UNIT - EU		
Boat model	Title	HL Loc	399 / 444 Sheet

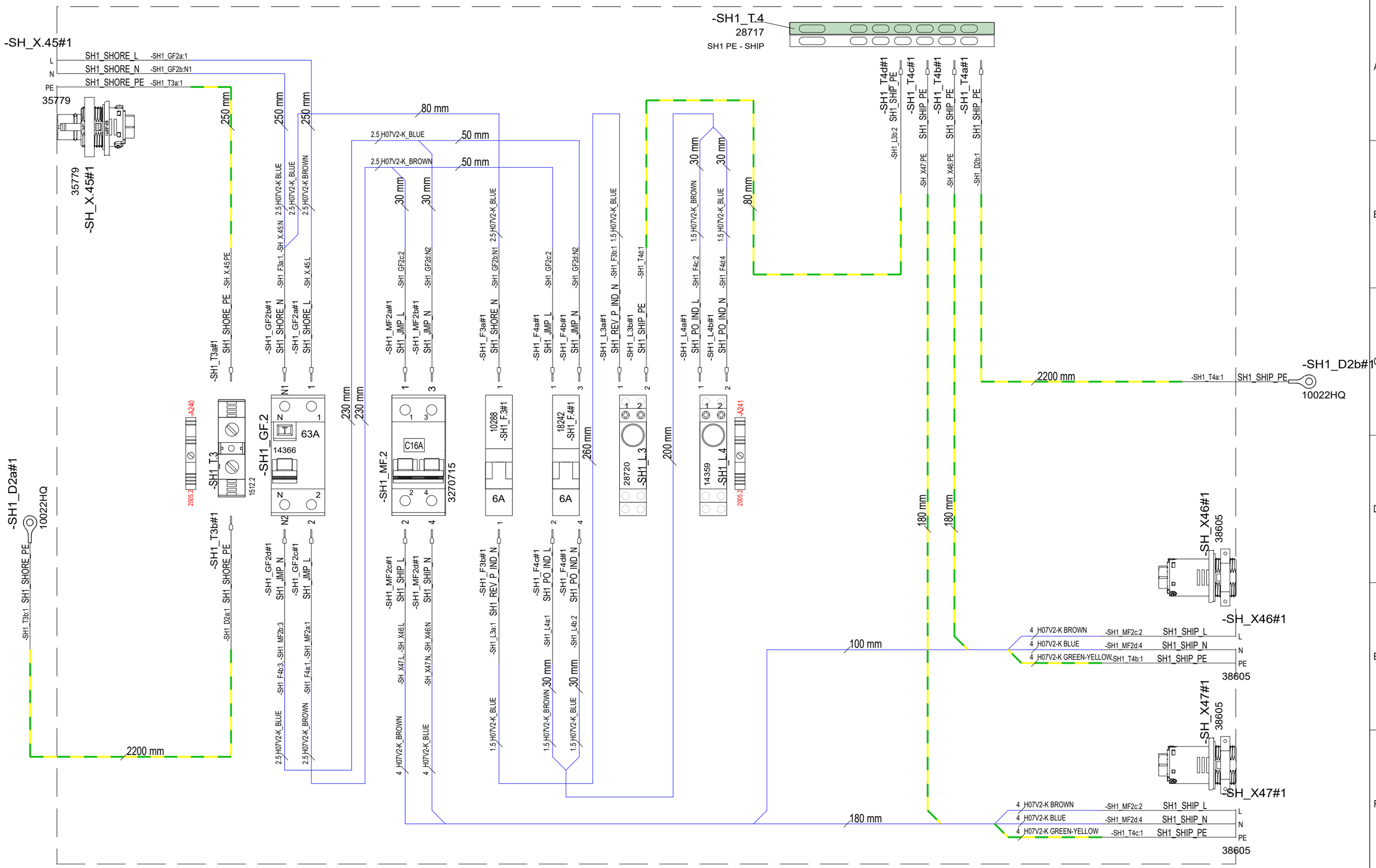

4.9.2023	VR	B1: 2004273; INTRODUCED DRAWING.	Date	7.3.2022	NAVIX	Axopar	39504 / 39408
9.11.2023	PF	C2: 2004890; End clamps added	Drawing by	TuM		Boat	Sub-product code / Product code
			Sheet rev.	2		45	ZERO EM SHORE LINE 1 AC MAIN BRK UNIT - EU
Date of modification	Modified by	Description	Project rev.	C	Copyright by	Boat model	Title / Project ID / Loc / Sheet: HL / 400 / 444

SPC TARKASTUSPÖYTÄKIRJA
SPC INSPECTION SHEET

TUOTE TARRA /
PRODUCT LABEL

* PPKKVV-JÄRJESTYSNUMERO / DDMMYY-RUNNING NUMBER (Esim. 11. maaliskuuta 2013 tehty tuote on sarjanumeroltaan 110313-01, seuraava on 110313-02 jne.)

SARJANUMERO* / SERIAL NUMBER*						
JOHDOT KIINNI OIKEIN / CORRECT CONNECTIONS						
MAADOITUS TULEVAT JA LÄHTEVÄT / GROUND CONNECTION IN AND OUT						
VVS JA TOTSIT I-ASENNOSSA / RCBO AND CIRCUIT BREAKERS IN I-POSITION						
ERISTYSVASTUS (mA) max lukema ** / ISOLATION RESISTOR (mA) max **						
MAAPIIRI 10A (Ohm) max lukema ** / GROUND CIRCUIT 10A (Ohm) max **						
TOIMINNALLINEN JA VVS TESTAUS / FUNCTIONAL AND RCBO TEST						
SARJANUMERO TARRA / SERIAL NUMBER STICKER						
PVM / DATE						
TESTASI / TESTED BY						

Tehty CENELEC EN 50106 mukaan / Made according to CENELEC EN 50106

**ERISTYSVASTUS JA MAAPIIRI TESTATTAVA JOKAISEEN SISÄÄNTULOON JA ULOSMENOON / ISOLATION RESISTOR AND GROUND CIRCUIT SHOULD BE TESTED FOR EVERY IN AND OUT

RAJA-ARVOT / LIMITS:

ERISTYSVASTUS / ISOLATING RESISTOR 1000V = <20mA

MAAPIIRI / GROUND CIRCUIT 10A = <0,2 Ohm

Date of modification	Modified by	Description
4.9.2023	VR	B1: 2004273; INTRODUCED DRAWING.
9.11.2023	PF	C2: 2004890; End clamps added

Date	7.3.2022
Drawing by	TuM
Sheet rev.	2
Project rev.	C

Copyright by

Axopar	39504	39408	
Boat	Sub-product code	Product code	Project ID
45	ZERO EM SHORE LINE 1 AC MAIN BRK UNIT - EU		
Boat model	Title	HL Loc	401/ 444 Sheet

GENERAL LAYOUT/ LABEL INSTALLATION

WITHOUT COVER

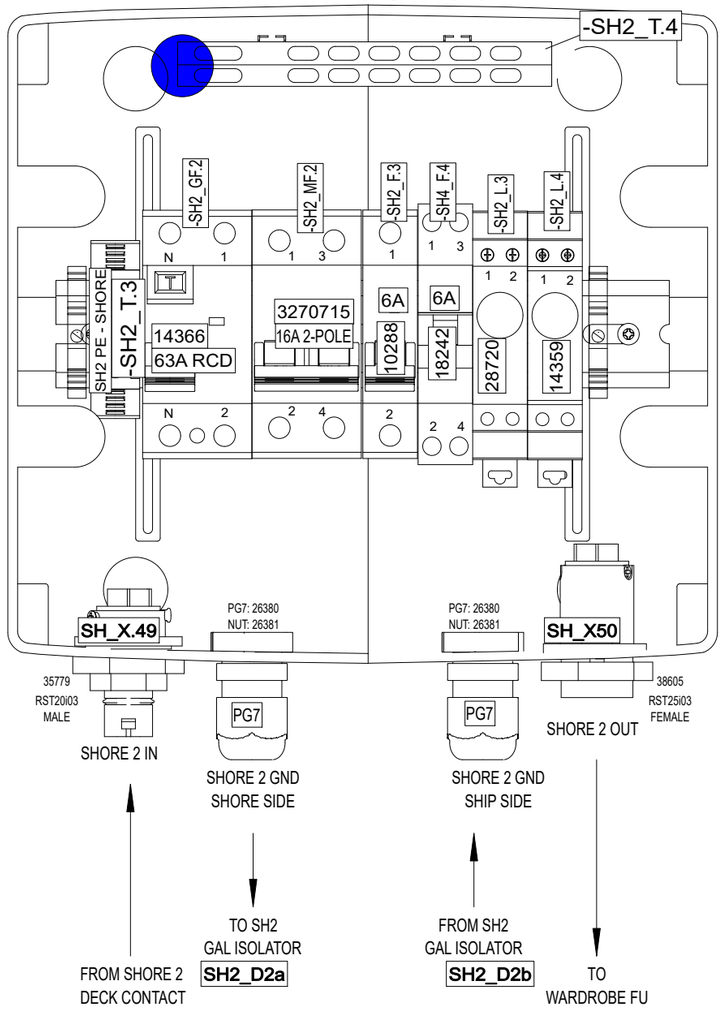

ENCLOSURE:
18113 (8-mod)

LEAVE BOX OWN COVER PLATE

LEAVE BOX OWN COVER PLATE

WITH COVER

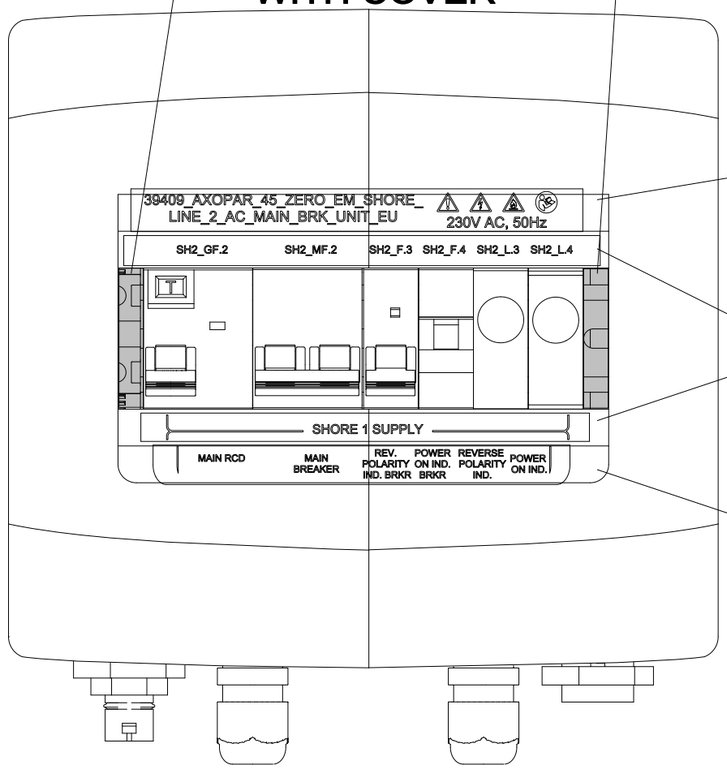

LABEL SET 39506

LABEL 1

LABEL 2

LABEL 3

LABEL 4

INCLUDED TO DELIVERY

1 x

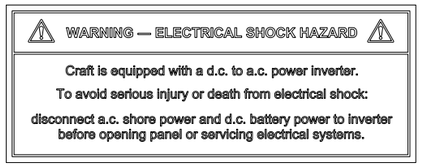

35106_NAVIX_ISO_INVERTER_CHARGER_WARNING_LABEL_V1

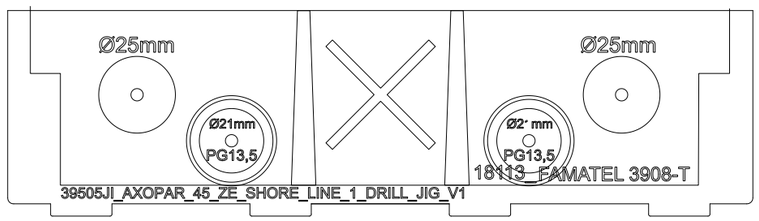

DRILL HOLES WITH 39473JI_V1 AND 39505JI_V1 AS GUIDE

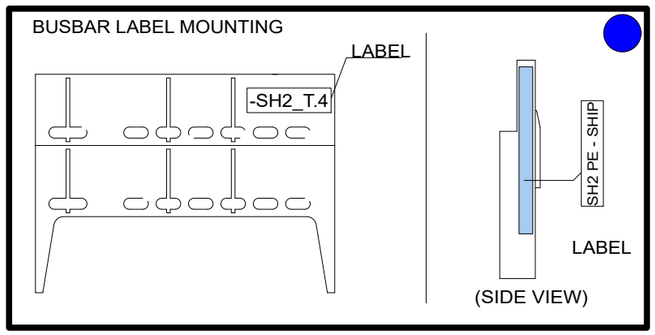

Date of modification	Modified by	Description
4.9.2023	VR	B1: INTRODUCED DRAWINGS
9.11.2023	PF	C2: 2004890; End clamps added

Date	4.9.2023
Drawing by	TuM
Sheet rev.	2
Project rev.	C

NAVIX

Copyright by

Axopar	39506	39409	Project ID
Boat	Sub-product code	Product code	
45	ZERO EM SHORE LINE 2 AC MAIN BRK UNIT - EU	HL	402 / 444
Boat model	Title	Loc	Sheet

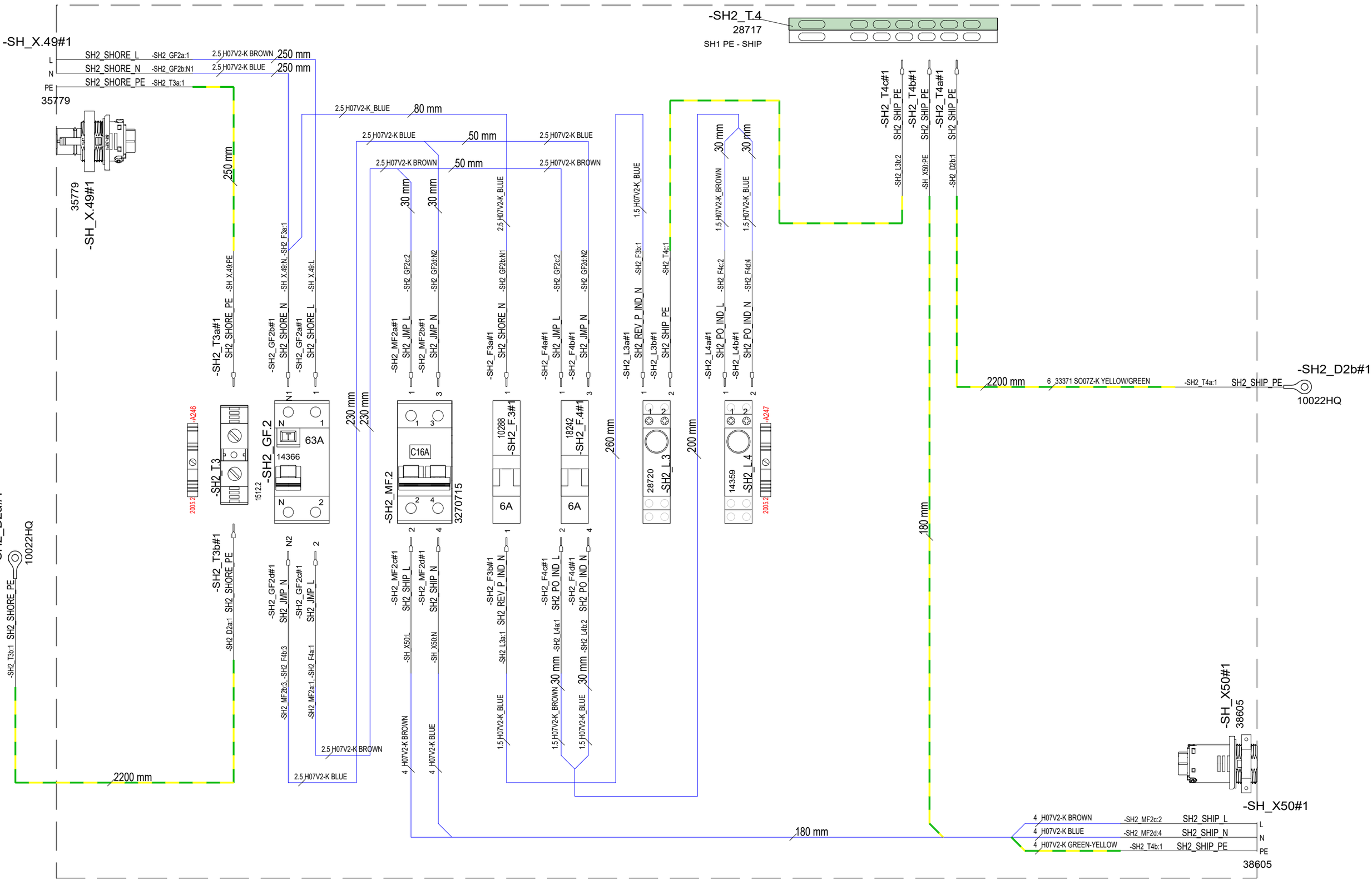

4.9.2023	VR	B1: INTRODUCED DRAWINGS	Date	4.9.2023	NAVIX	Axopar	39506	39409	
9.11.2023	PF	C2: 2004890; End clamps added	Drawing by	TuM		Boat	Sub-product code	Product code	Project ID
			Sheet rev.	2		45	ZERO EM SHORE LINE 2 AC MAIN BRK UNIT - EU		
Date of modification	Modified by	Description	Project rev.	C	Copyright by	Boat model	Title	HL Loc	403 / 444 Sheet

SPC TARKASTUSPÖYTÄKIRJA
SPC INSPECTION SHEET

TUOTE TARRA /
PRODUCT LABEL

* PPKKVV-JÄRJESTYSNUMERO / DDMMYY-RUNNING NUMBER (Esim. 11. maaliskuuta 2013 tehty tuote on sarjanumeroltaan 110313-01, seuraava on 110313-02 jne.)

SARJANUMERO* / SERIAL NUMBER*						
JOHDOT KIINNI OIKEIN / CORRECT CONNECTIONS						
MAADOITUS TULEVAT JA LÄHTEVÄT / GROUND CONNECTION IN AND OUT						
VVS JA TOTSIT I-ASENNOSSA / RCBO AND CIRCUIT BREAKERS IN I-POSITION						
ERISTYSVASTUS (mA) max lukema ** / ISOLATION RESISTOR (mA) max **						
MAAPIIRI 10A (Ohm) max lukema ** / GROUND CIRCUIT 10A (Ohm) max **						
TOIMINNALLINEN JA VVS TESTAUS / FUNCTIONAL AND RCBO TEST						
SARJANUMERO TARRA / SERIAL NUMBER STICKER						
PVM / DATE						
TESTASI / TESTED BY						

Tehty CENELEC EN 50106 mukaan / Made according to CENELEC EN 50106

**ERISTYSVASTUS JA MAAPIIRI TESTATTAVA JOKAISEEN SISÄÄNTULOON JA ULOSMENOON / ISOLATION RESISTOR AND GROUND CIRCUIT SHOULD BE TESTED FOR EVERY IN AND OUT

RAJA-ARVOT / LIMITS:

ERISTYSVASTUS / ISOLATING RESISTOR 1000V = <20mA

MAAPIIRI / GROUND CIRCUIT 10A = <0,2 Ohm

Date of modification	Modified by	Description
4.9.2023	VR	B1: INTRODUCED DRAWINGS
9.11.2023	PF	C2: 2004890; End clamps added

Date 4.9.2023
Drawing by TuM
Sheet rev. 2
Project rev. C

Copyright by

Axopar — Boat
45 — Boat model
39506 — Sub-product code
39409 — Product code
Project ID
ZERO EM SHORE LINE 2 AC MAIN BRK UNIT - EU — Title
HL — Loc
404 / 444 — Sheet

GENERAL LAYOUT

39673 Axopar 45 AFT CABIN SOCKET - EU

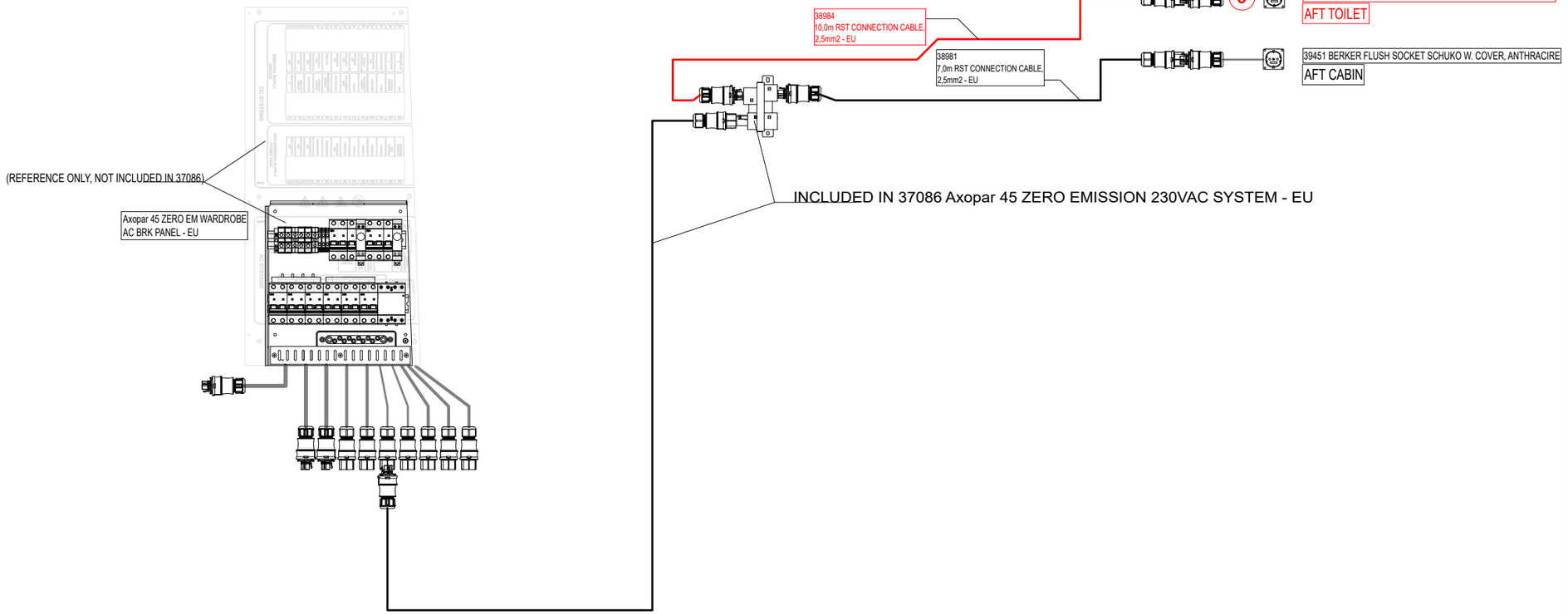

NOTE.
PACK ALL ITEMS TO SAME PACKAGE.

Date of modification	Modified by	Description
12.9.2023	TuM	B1: 2004274; INTRODUCED DRAWING.
29.5.2024	TuM	C2: 2005064; AFT TOILET SOCKET ADDED.

Date 12.9.2023
Drawing by TuM
Sheet rev. 2
Project rev. C

Copyright by

NAVIX

Boat	Sub-product code	Product code	Project ID
Axopar		39673	
Boat model	Title	HL	Sheet
45	AFT CABIN SOCKET - EU	Loc	405 / 444

GENERAL LAYOUT

39674 Axopar 45 AFT CABIN SOCKET - USA

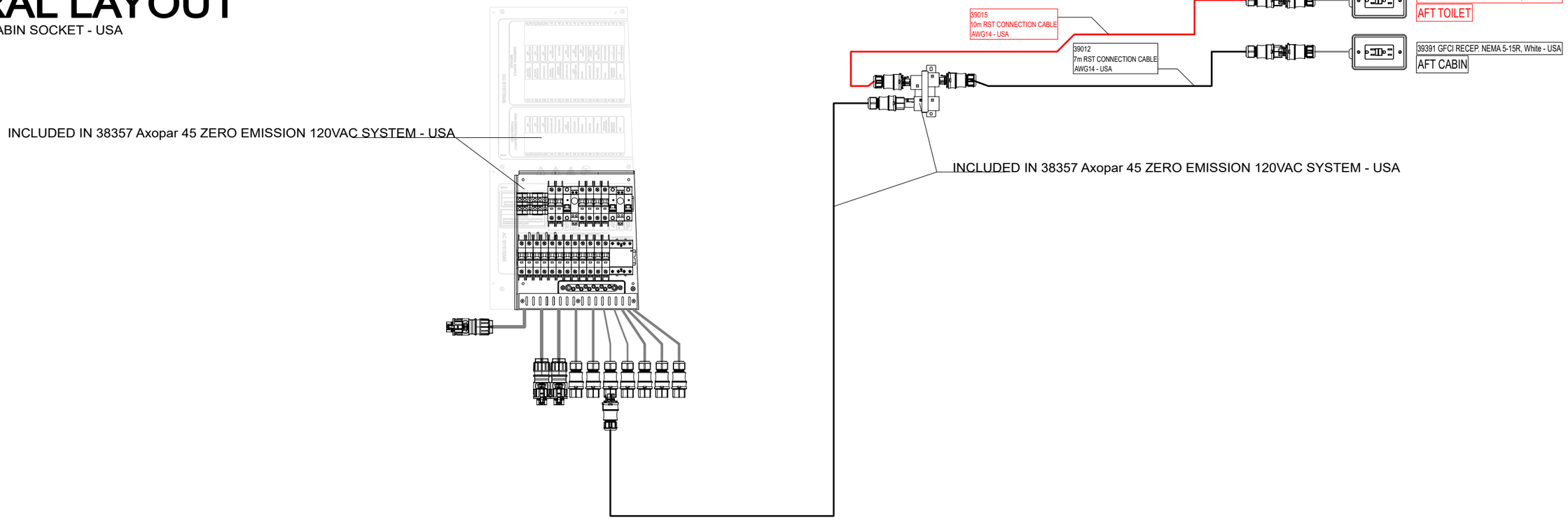

NOTE.
PACK ALL ITEMS TO SAME PACKAGE.

Date of modification	Modified by	Description
21.8.2023	TuM	B1: 2004274; INTRODUCED DRAWING.
29.5.2024	TuM	C2: 2005065; AFT TOILET SOCKET ADDED.

Date	21.8.2023
Drawing by	TuM
Sheet rev.	2
Project rev.	C

Copyright by

NAVIX

Boat: Axopar	Sub-product code:	Product code: 39674	Project ID:	
Boat model: 45	Title: AFT CABIN SOCKET - USA	HL:	Loc:	Sheet: 406 / 444

NOTICE! CABLES WITH STICKER

FOR EXAMPLE

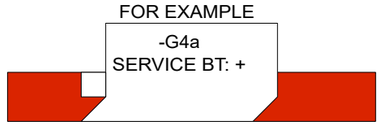

HEAT SHRINK TUBING AT THE ENDS OF NW-TUBE

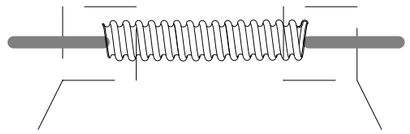

HEAT SHRINK TUBE 23344
50mm

HEAT SHRINK TUBE 23344
50mm

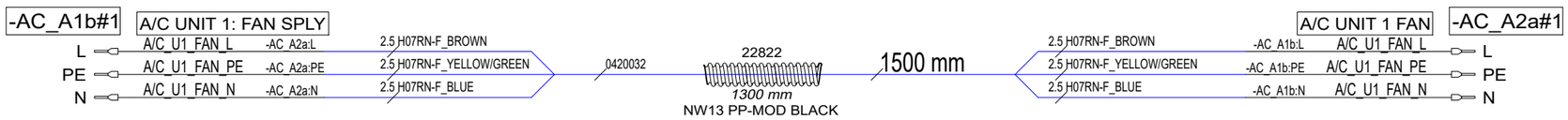

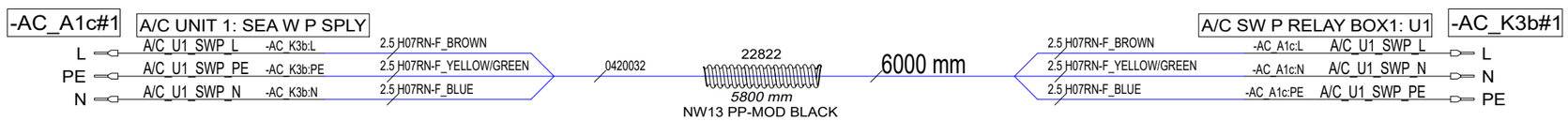

12.9.2023	TuM	B1: 2004274; INTRODUCED DRAWING.	Date	12.9.2023		Axopar		39679	
30.5.2024	TuM	C1: 2005065; NOT MODIFIED.	Drawing by	TuM		Boat	Sub-product code	Product code	Project ID
			Sheet rev.	1		45	A/C UNIT 1	HL	
Date of modification	Modified by	Description	Project rev.	C	Copyright by	Boat model	CONNECTION CABLES - EU Title	Loc	407 / 444 Sheet

NOTICE! CABLES WITH STICKER

FOR EXAMPLE

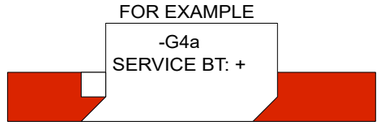

HEAT SHRINK TUBING AT THE ENDS OF NW-TUBE

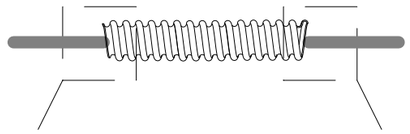

HEAT SHRINK TUBE 23344
50mm

HEAT SHRINK TUBE 23344
50mm

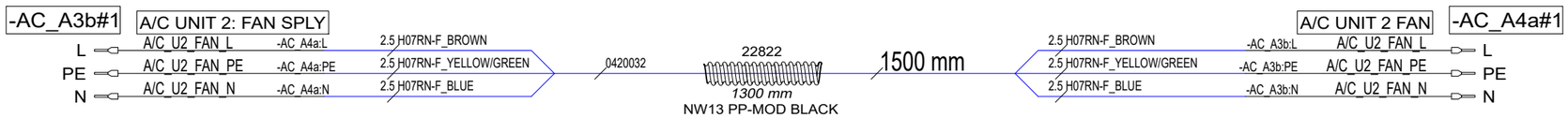

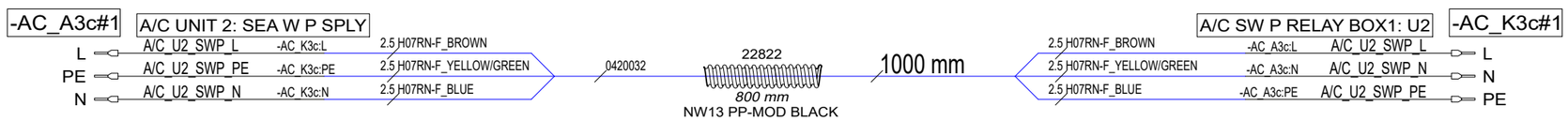

12.9.2023	TuM	B1: 2004274; INTRODUCED DRAWING.	Date	12.9.2023		Axopar			
30.5.2024	TuM	C1: 2005065; NOT MODIFIED.	Drawing by	TuM		Boat	Sub-product code	39680 Product code	Project ID
			Sheet rev.	1		45	A/C UNIT 2	HL	
Date of modification	Modified by	Description	Project rev.	C	Copyright by	Boat model	CONNECTION CABLES - EU Title	Loc	408 / 444 Sheet

NAVIX

NOTICE! CABLES WITH STICKER

FOR EXAMPLE

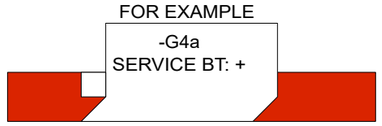

HEAT SHRINK TUBING AT THE ENDS OF NW-TUBE

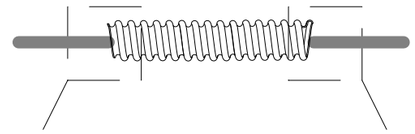

HEAT SHRINK TUBE 23344
50mm

HEAT SHRINK TUBE 23344
50mm

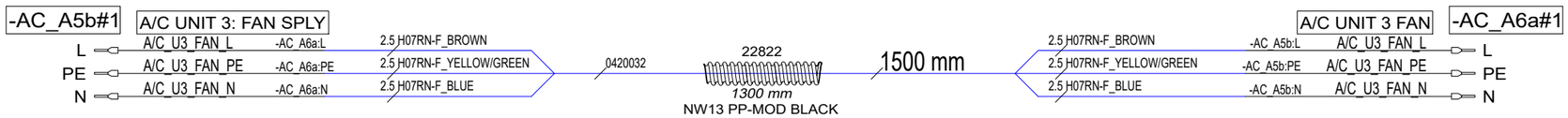

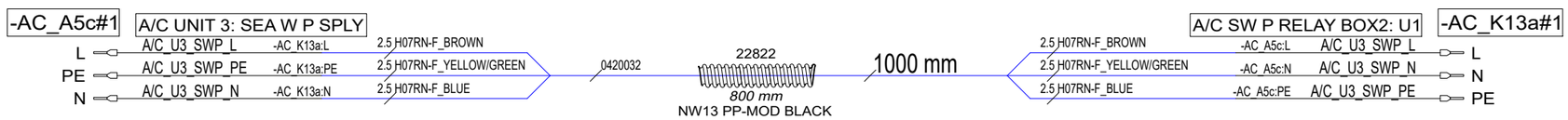

12.9.2023	TuM	B1: 2004274; INTRODUCED DRAWING.	Date	12.9.2023		Axopar		39681	
30.5.2024	TuM	C1: 2005065; NOT MODIFIED.	Drawing by	TuM		Boat	Sub-product code	Product code	Project ID
			Sheet rev.	1		45	A/C UNIT 3	HL	
Date of modification	Modified by	Description	Project rev.	C	Copyright by	Boat model	CONNECTION CABLES - EU	Loc	409 / 444
							Title		Sheet

NAVIX

NOTICE! CABLES WITH STICKER

FOR EXAMPLE

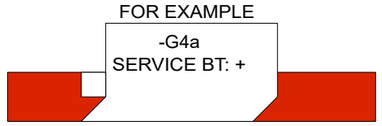

HEAT SHRINK TUBING AT THE ENDS OF NW-TUBE

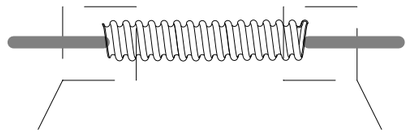

HEAT SHRINK TUBE 23344
50mm

HEAT SHRINK TUBE 23344
50mm

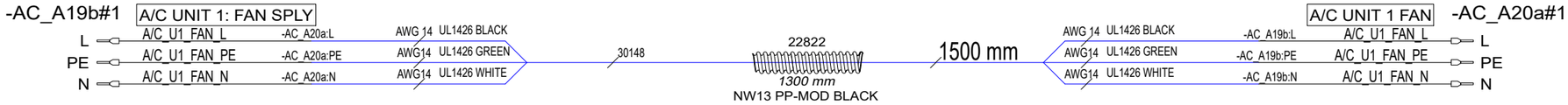

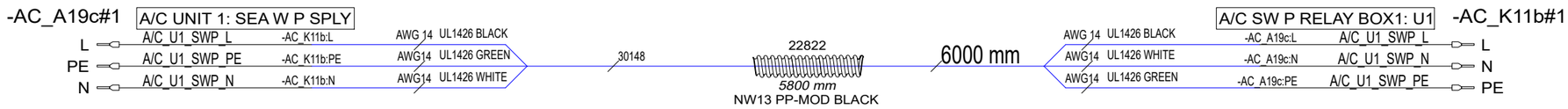

24.8.2023	TuM	B1: 2004274; INTRODUCED DRAWING.	Date	24.8.2023	NAVIX	Axopar		39682	
30.5.2024	TuM	C1: 2005065; NOT MODIFIED.	Drawing by	TuM		Boat	Sub-product code	Product code	Project ID
			Sheet rev.	1		45	A/C UNIT 1 CONNECTION CABLES - USA	HL	410 / 444
Date of modification	Modified by	Description	Project rev.	C	Copyright by	Boat model	Title	Loc	Sheet

NOTICE! CABLES WITH STICKER

FOR EXAMPLE

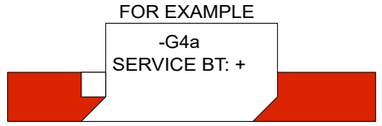

HEAT SHRINK TUBING AT THE ENDS OF NW-TUBE

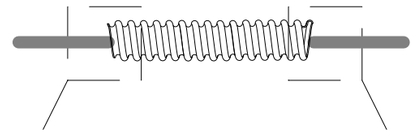

HEAT SHRINK TUBE 23344
50mm

HEAT SHRINK TUBE 23344
50mm

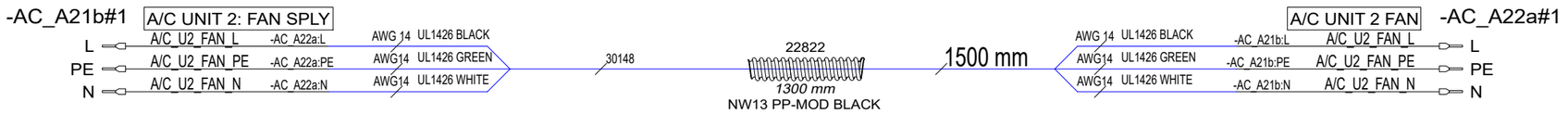

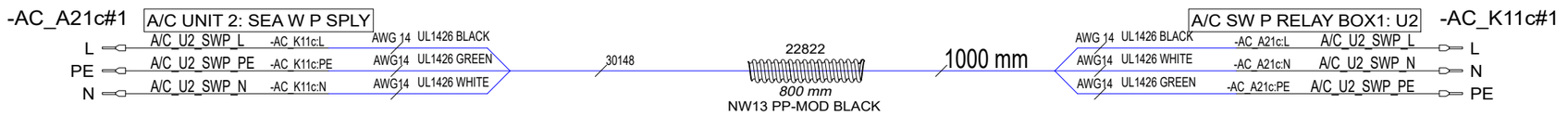

24.8.2023	TuM	B1: 2004274; INTRODUCED DRAWING.	Date	24.8.2023	NAVIX	Axopar		39683	
30.5.2024	TuM	C1: 2005065; NOT MODIFIED.	Drawing by	TuM		Boat	Sub-product code	Product code	Project ID
			Sheet rev.	1		45	A/C UNIT 2	HL	411/ 444
Date of modification	Modified by	Description	Project rev.	C	Copyright by	Boat model	CONNECTION CABLES - USA	Loc	Sheet
							Title		

NOTICE! CABLES WITH STICKER

FOR EXAMPLE

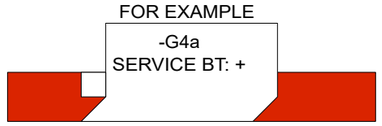

HEAT SHRINK TUBING AT THE ENDS OF NW-TUBE

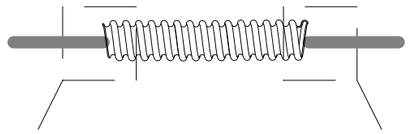

HEAT SHRINK TUBE 23344
50mm

HEAT SHRINK TUBE 23344
50mm

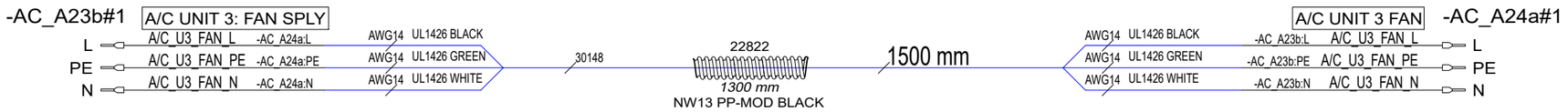

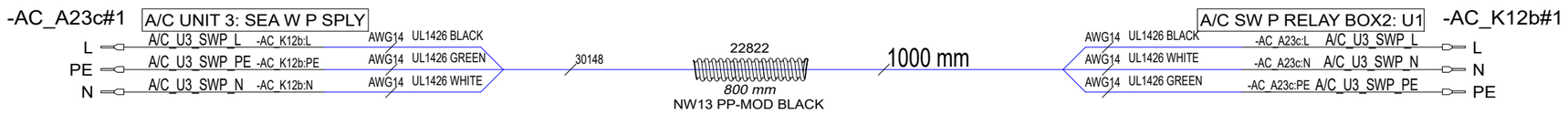

Date of modification	Modified by	Description
24.8.2023	TuM	B1: 2004274; INTRODUCED DRAWING.
30.5.2024	TuM	C1: 2005065; NOT MODIFIED.

Date	24.8.2023
Drawing by	TuM
Sheet rev.	1
Project rev.	C

Copyright by

Axopar		39684	
Boat	Sub-product code	Product code	Project ID
45	A/C UNIT 3	HL	
Boat model	Title	Loc	412 / 444 Sheet
	CONNECTION CABLES - USA		

GENERAL LAYOUT

39863 Axopar 45 STD SECOND SHORE LINE 230VAC - EU

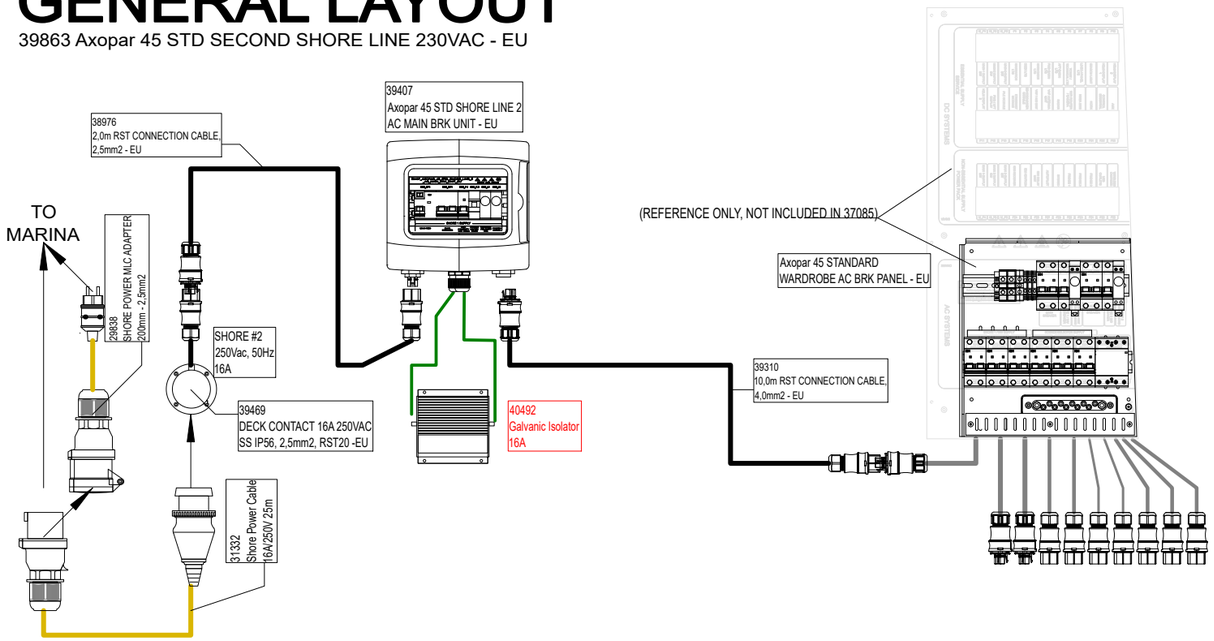

NOTE.
PACK ALL ITEMS TO SAME PACKAGE.

Date of modification	Modified by	Description
21.9.2023	TuM	B1: 2004274; INTRODUCED DRAWING.
28.5.2024	TuM	C2: 2005065: Galvanic isolator changed 30A -->16A.

Date	21.9.2023
Drawing by	TuM
Sheet rev.	2
Project rev.	C

Copyright by NAVIX

Boat	Sub-product code	Product code	Project ID
Axopar		39863	
Boat model	Title	Loc	Sheet
45	STD SECOND SHORE LINE 230VAC - EU	HL	413 / 444

GENERAL LAYOUT

39864 Axopar 45 BASIC SECOND 120VAC SHORE LINE - USA

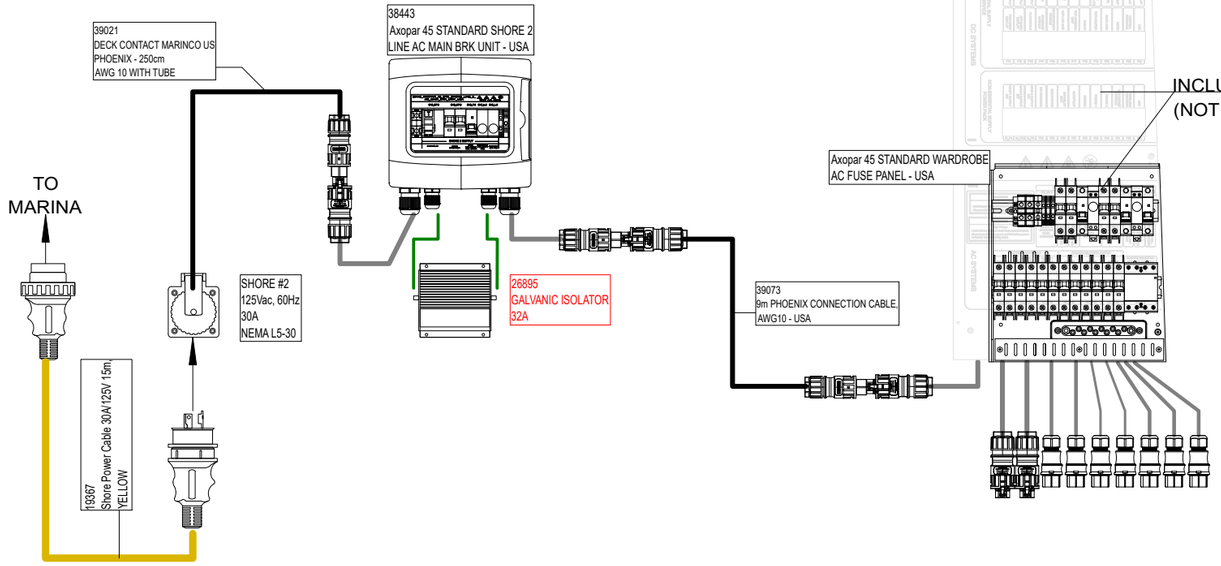

INCLUDED IN 38352 Axopar 45 BASIC 120VAC SYSTEM - USA
(NOT INCLUDED IN THIS PRODUCT)

NOTE.
PACK ALL ITEMS TO SAME PACKAGE.

Date of modification	Modified by	Description
22.9.2023	TuM	B1: 2004274; INTRODUCED DRAWING
28.5.2024	TuM	C2: 2005065: Galvanic isolator changed 30A -->32A.

Date	22.9.2023
Drawing by	TuM
Sheet rev.	2
Project rev.	C

Copyright by

NAVIX

Boat	Sub-product code	Product code	Project ID
Axopar		39864	
Boat model	Title	Loc	Sheet
45	BASIC SECOND 120VAC SHORE LINE - USA	HL	414 / 444

CUSTOMER: WHEN V10 ENGINES ARE SELECTED USE FUSES BELOW IN CORRESPONDING PRODUCTS

Codes for customer reference only →

ALL FUSES (12 pcs) IN SINGLE PACKAGE ←

36411	36412	36413	36422	36424	36747
-AL_F.1#1 13633 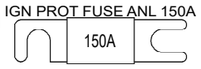	-AL_F.2#1 13633 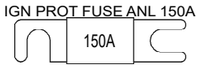	-AL_F.3#1 13633 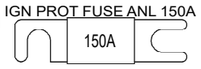	-AL_F.4-2#1 13633 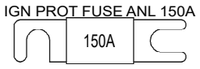	-AL_F.7#1 13633 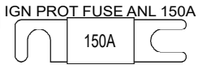	-AL_F.4-1#1 13633 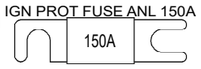
			-AL_F.5-2#1 13633 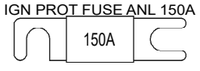	-AL_F.8#1 13633 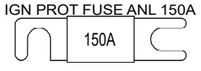	-AL_F.5-1#1 13633 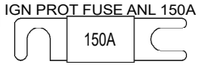
			-AL_F.6-2#1 13633 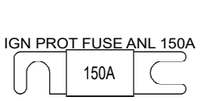	-AL_F.9#1 13633 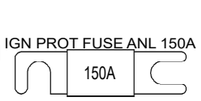	-AL_F.6-1#1 13633 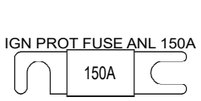

20.11.2023	PF	C1: 2004890; New product	Date 9.11.2023	NAVIX	Axopar		40286	
			Drawing by PF		Boat	Sub-product code	Product code	Project ID
			Sheet rev. 1		45	FUSES FOR V10	HL	415 / 444
Date of modification	Modified by	Description	Project rev. C	Copyright by	Boat model	Title	Loc	Sheet

CUSTOMER: WHEN V8 ENGINES ARE SELECTED USE FUSES BELOW IN CORRESPONDING PRODUCTS

Codes for customer reference only →

ALL FUSES (12 pcs) IN SINGLE PACKAGE ←

36411	36412	36413	36422	36424	36747
-AL_F.1#1 20010 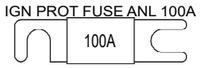	-AL_F.2#1 20010 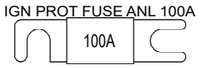	-AL_F.3#1 20010 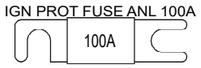	-AL_F.4-2#1 20010 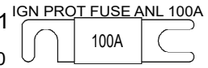	-AL_F.7#1 20010 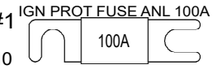	-AL_F.4-1#1 20010 
			-AL_F.5-2#1 20010 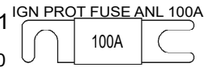	-AL_F.8#1 20010 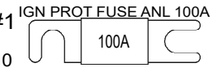	-AL_F.5-1#1 20010 
			-AL_F.6-2#1 20010	-AL_F.9#1 20010	-AL_F.6-1#1 20010

28.11.2023	PF	C1: 2004890; New product	Date 28.11.2023	NAVIX	Axopar		40364
			Drawing by PF		Boat	Sub-product code	Product code
			Sheet rev. 1		45	FUSES FOR V8	HL
Date of modification	Modified by	Description	Project rev. C	Copyright by	Boat model	Title	Loc

Project ID

416 / 444 Sheet

-LS5#1 Z1: SUBWOOFER

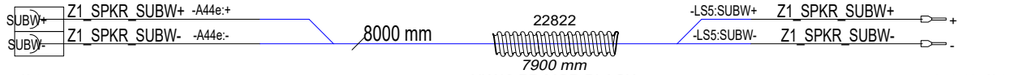

-A44e#1

-LS2#1 Z1: PILOTHOUSE FWD STBD

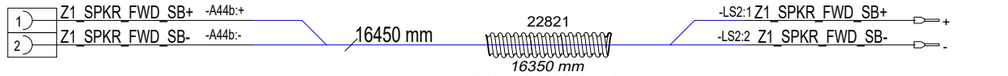

-A44b#1

-LS1#1 Z1: PILOTHOUSE FWD PORT

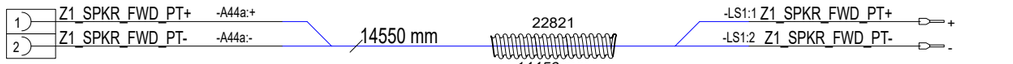

-A44a#1

-LS3#1 Z1: PILOTHOUSE AFT PORT

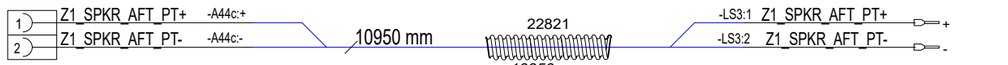

-A44c#1

-LS4#1 Z1: PILOTHOUSE AFT STBD

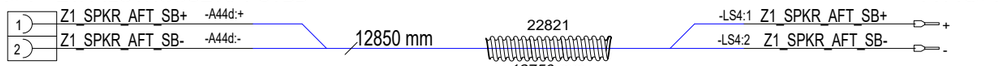

-A44d#1

-LS6#1 Z2: FWD CABIN FWD PORT

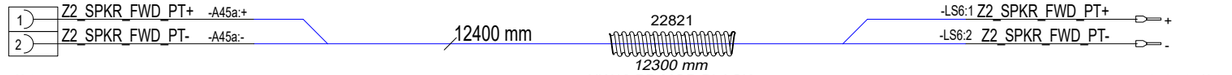

-A45a#1

-LS7#1 Z2: FWD CABIN FWD STBD

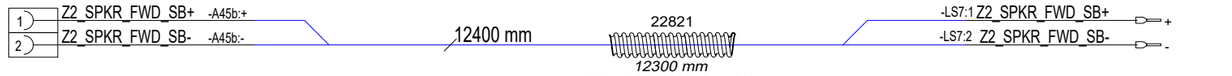

-A45b#1

-LS8#1 Z2: FWD CABIN AFT PORT

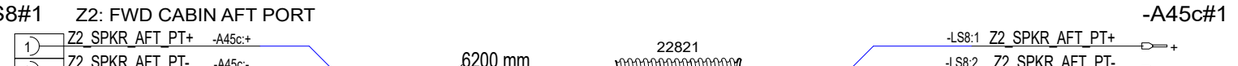

-A45c#1

-LS9#1 Z2: FWD CABIN AFT STBD

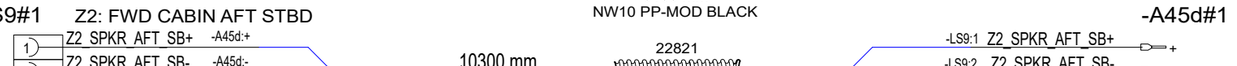

-A45d#1

-LS14#1 Z4: AFT CABIN PORT

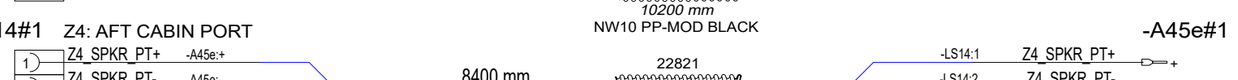

-A45e#1

-LS15#1 Z4: AFT CABIN STBD

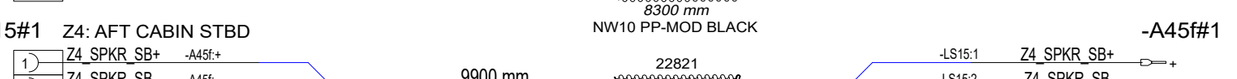

-A45f#1

-LS10#1 Z3: OUTSIDE FWD PORT

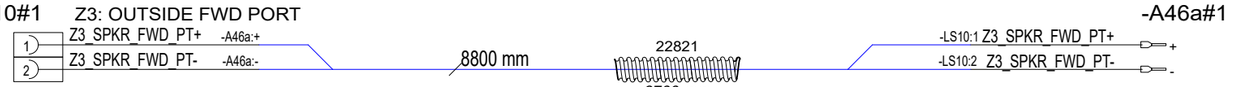

-A46a#1

-LS11#1 Z3: OUTSIDE FWD STBD

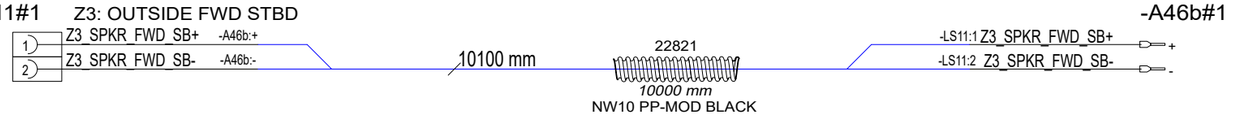

-A46b#1

-LS12#1 Z3: OUTSIDE AFT PORT

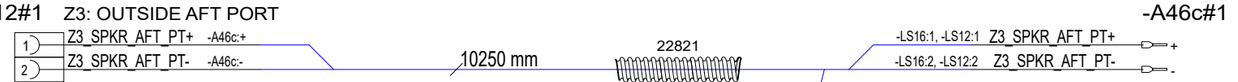

-A46c#1

-LS16#1 Z3: OUTSIDE AFT PORT

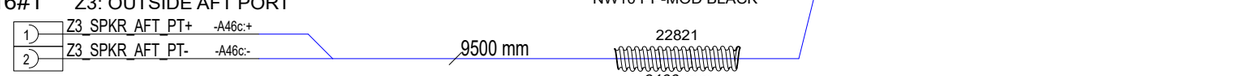

-LS13#1 Z3: OUTSIDE AFT STBD

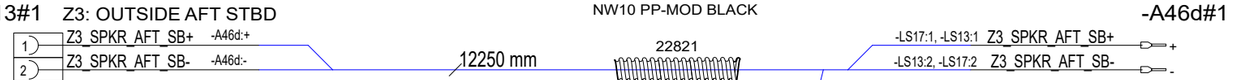

-A46d#1

-LS17#1 Z3: OUTSIDE AFT STBD



28.11.2023	PF/TuM	C1: 2004890; New product; 2005043; Tubes added.	Date 28.11.2023	NAVIX	Axopar		40365
			Drawing by PF		Boat	Sub-product code	Product code / Project ID
			Sheet rev. 1		45	SPEAKER CABLES	HL / 417 / 444
Date of modification	Modified by	Description	Project rev. C	Copyright by	Boat model	Title	Loc / Sheet

BOAT SPECIFIC WIRING

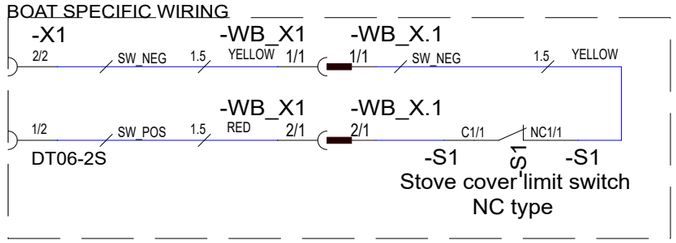

CUSTOMERS CONNECTS TO:

40309 NAVIX LINE BREAK OFF CONTACTOR UNIT RST 25A
OR
40476 NAVIX LINE BREAK OFF CONTACTOR UNIT RST 25A US

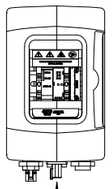

1) Solder wire ends to correct pins
2) Cover each solder joint with 2pcs 40mm heat shrink VMI37534
3) Attach covered wires and switch bottom toeach other with hot glue

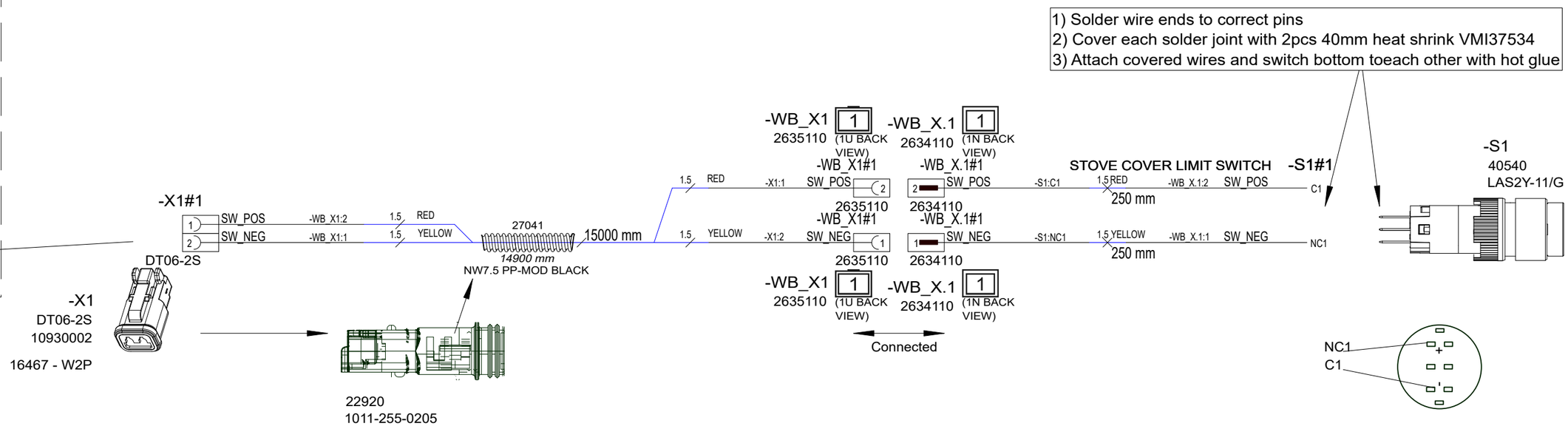

4.12.2023	PF	C1: 2004890; New product	Date 4.12.2023	NAVIX	Axopar		40441	
			Drawing by PF		Boat	Sub-product code	Product code	Project ID
			Sheet rev. 1		45	BREAK OFF SWITCH HARNESS		418 / 444
Date of modification	Modified by	Description	Project rev. C	Copyright by	Boat model	Title	Loc	Sheet

GENERAL LAYOUT & LABELS
WIRE ROUTES / CABLE TIES

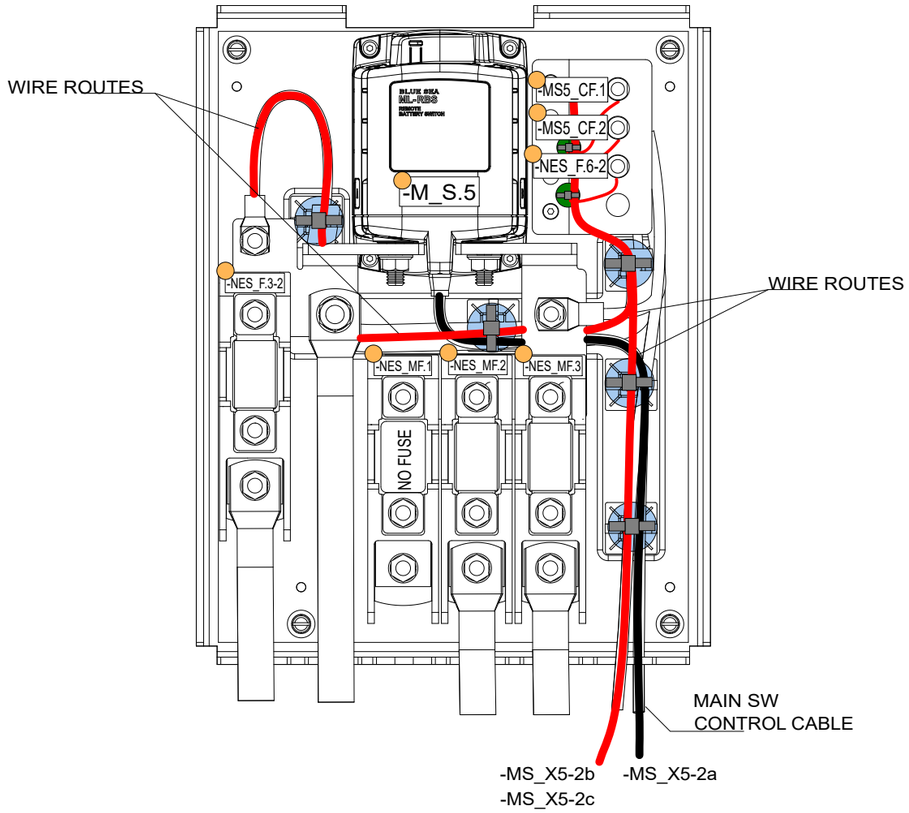

COVER LABEL INSTALLATION

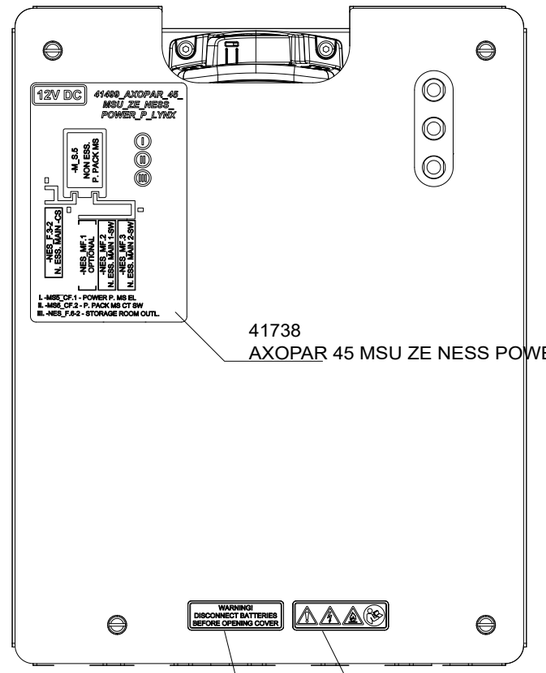

41738
AXOPAR 45 MSU ZE NESS POWER PACK LYNX MAP

36874
NAVIX LINE WARNING LABEL SYMBOLS

36873
NAVIX LINE WARNING LABEL FOR COVER

LABEL

Cable tie mount
VMI36559
+ CABLE TIE

CABLE TIE

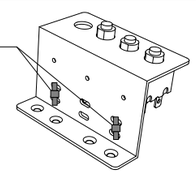

(ATTACHED TO 33383_NAVIX_LINE_MSU_FUSE_HOLDER)

			Date 14.5.2024	NAVIX	Axopar	SEE EXP VIEW	41499	
			Drawing by TuM		Boat	Sub-product code	Product code	Project ID
14.5.2024	TuM	C1: 2004998: INTRODUCED DRAWING.	Sheet rev. 1		45	MSU ZERO EM. NESS. POWER P. - LYNX	HL	419 / 444
Date of modification	Modified by	Description	Project rev. C	Copyright by	Boat model	Title	Loc	Sheet

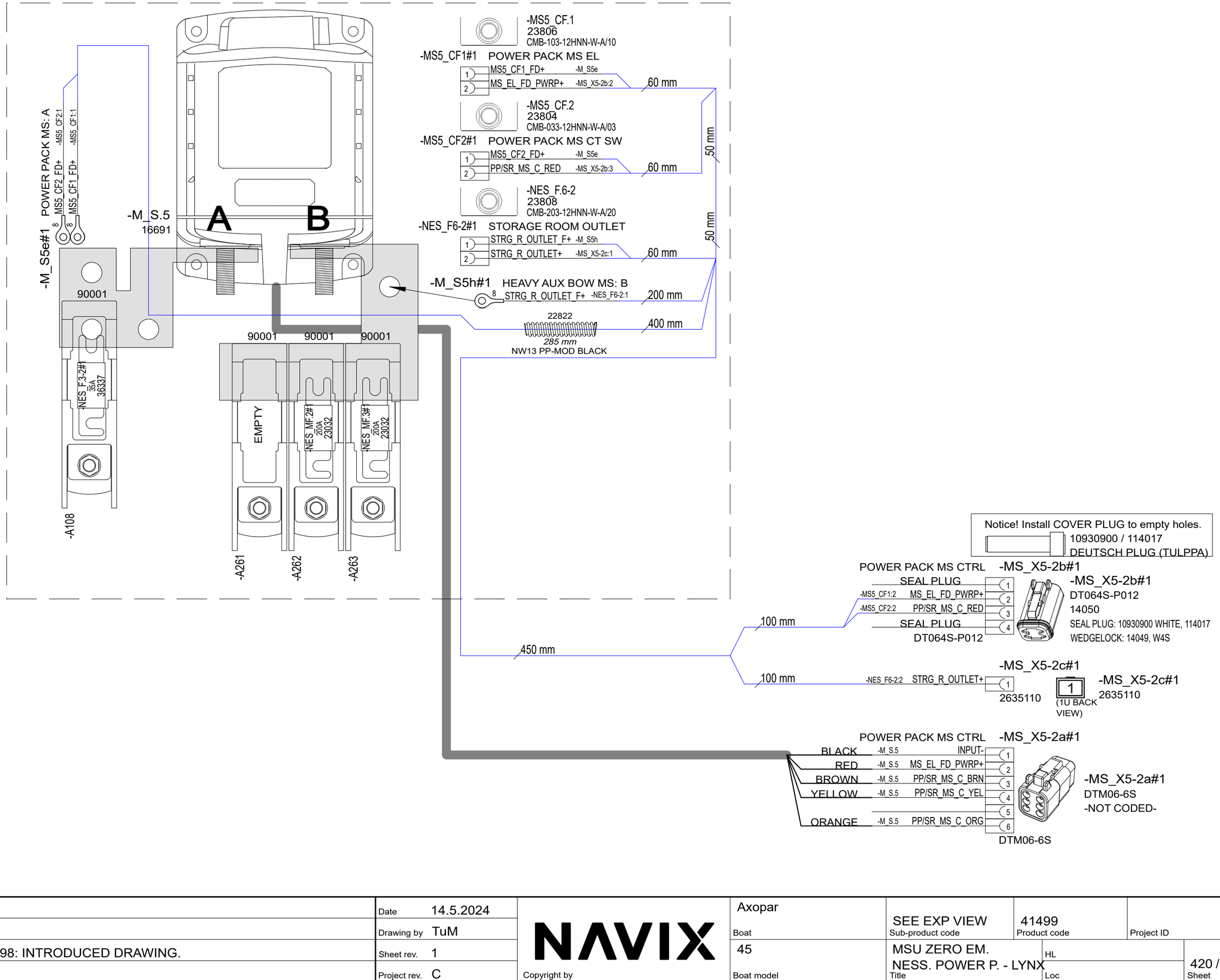

			Date 14.5.2024	NAVIX	Axopar	SEE EXP VIEW	41499	
			Drawing by TuM					
14.5.2024	TuM	C1: 2004998: INTRODUCED DRAWING.	Sheet rev. 1		45	MSU ZERO EM. NESS. POWER P. - LYNX	HL	420 / 444
Date of modification	Modified by	Description	Project rev. C	Copyright by	Boat model	Title	Loc	Sheet

Boat: Axopar | Sub-product code: SEE EXP VIEW | Product code: 41499 | Project ID:

EXP VIEW

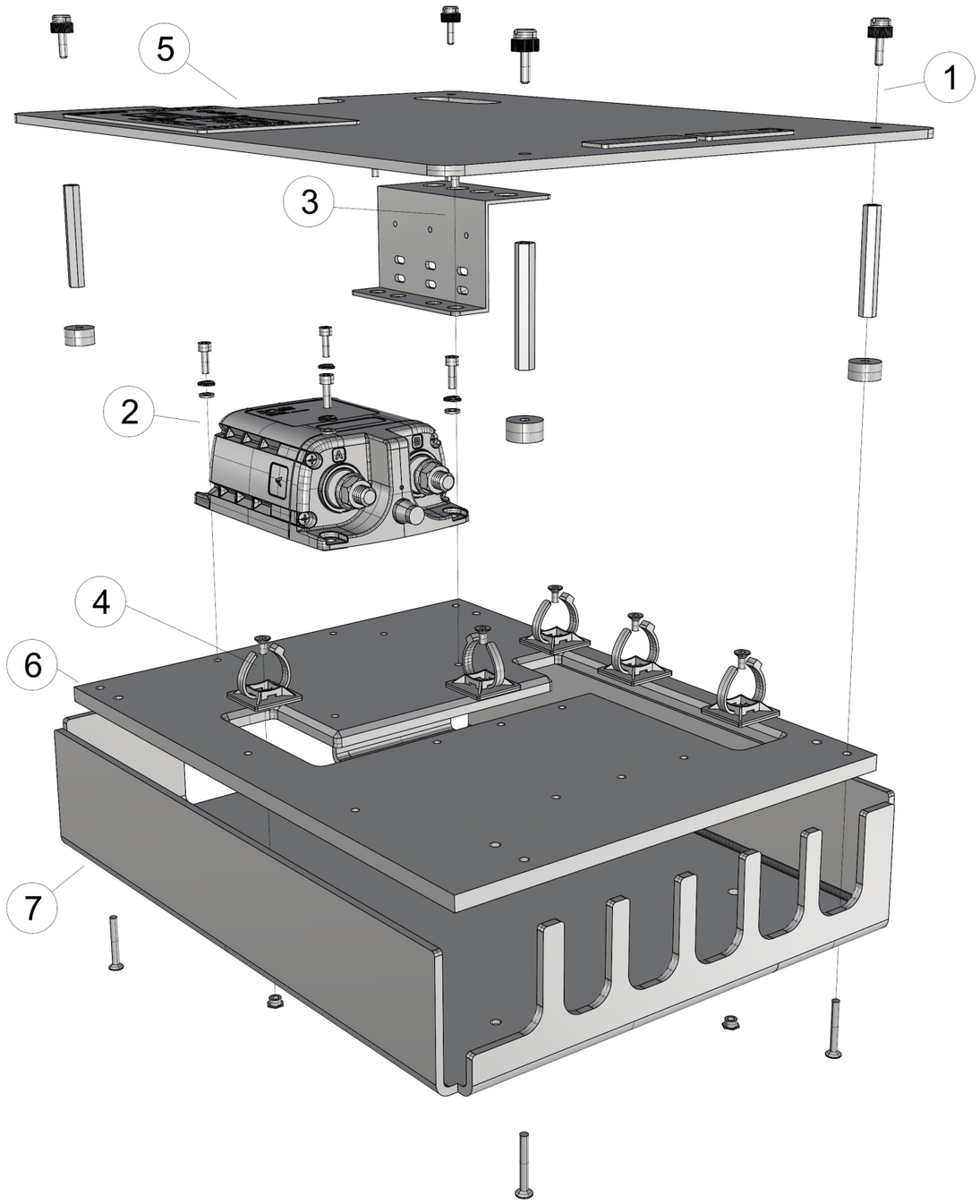

41499_AXOPAR_45_MSU_ZE_NESS_POWER_P_LYNX

1. 4PCS 41000 - Slotted Knurled Head Screw M4 12mm PA
   4PCS VMI32041 EXTENSION BOLT M4 L50
   4PCS 29063_NAVIX_LINE_8MM_WASHER_V1
   4PCS VMI30920 COUNTERSUNK HEAD SCREW HEX SOCKET M4X30 DIN7991

2. 4PCS VMI30944 HEX SOCKET HEAD CAP SCREW M4X12 DIN912
   4PCS VMI30904 SPRING LOCK WASHER M4 DIN127
   4PCS VMI30906 FLAT WASHER FOR HEX BOLTS AND NUTS M4 DIN125A
   - MAIN SWITCH (AS IN DIAGRAM) -

3. 2PCS VMI30914 COUNTERSUNK HEAD SCREW HEX SOCKET M4X10 DIN7991
   1PC 33383_NAVIX_LINE_MSU_FUSE_HOLDER

4. 5PCS VMI30913 COUNTERSUNK HEAD SCREW HEX SOCKET M4X8 DIN7991
   5PCS VMI36559 Self Adhesive Black Cable Tie Mount 5,3mm

5. 1PC 41737_AXOPAR_45_MSU_ZE_NESS_POWER_P_LYNX_COVER_V1
   + LABELS (AS IN DIAGRAM)

6. 1PC 41736_AXOPAR_45_MSU_ZE_NESS_POWER_P_LYNX_BASE_V1

7. 1PC 41735_AXOPAR_45_MSU_ZE_NESS_POWER_P_LYNX_BACK_V1

			Date 14.5.2024	Copyright by	Axopar Boat	SEE EXP VIEW Sub-product code	41499 Product code	Project ID
			Drawing by TuM					
14.5.2024	TuM	C1: 2004998: INTRODUCED DRAWING.	Sheet rev. 1		45 Boat model	MSU ZERO EM. NESS. POWER P. - LYNX Title	HL Loc	421/ 444 Sheet
Date of modification	Modified by	Description	Project rev. C					

EXP VIEW

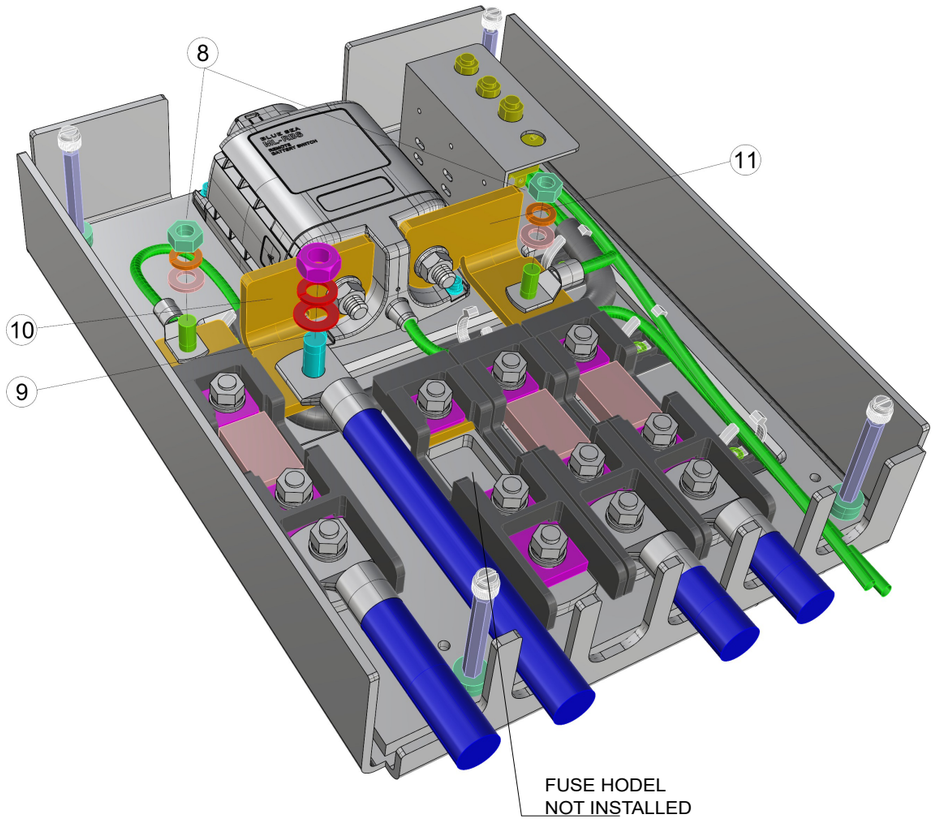

8. 2PCS VMI32012 HEX NUT M8 DIN934
   2PCS VMI32011 SPRING LOCK WASHER M8 DIN127
   2PCS VMI32013 FLAT WASHER FOR HEX BOLTS AND NUTS M8 DIN125A
   2PCS VMI32018 HEX BOLT FULL THREAD M8X25 DIN933

9. 1PC VMI32010 - HEX Nut M10 DIN934 C4
   1PC VMI32008 - Spring Lock Washer M10 DIN127 C4
   1PC VMI32009 - Flat Washer for HEX bolts and nuts M10 DIN125A C4
   1PC VMI32023 - HEX Bolt Full thread M10X25 DIN933 C4

10. 1PC 36943_NAVIX_LINE_BUS_BAR_TYPE5_LEFT_2X_UP_V1

11. 1PC 41750_NAVIX_LINE_BUS_BAR_TYPE5_RIGHT_3X_BELOW_LEFT_V1

4.6.2024 / HH

			Date 14.5.2024	Copyright by NAVIX	Axopar	SEE EXP VIEW	41499	
			Drawing by TuM		Boat	Sub-product code	Product code	Project ID
14.5.2024	TuM	C1: 2004998: INTRODUCED DRAWING.	Sheet rev. 1		45	MSU ZERO EM. NESS. POWER P. - LYNX	HL	422 / 444
Date of modification	Modified by	Description	Project rev. C		Boat model	Title	Loc	Sheet

GENERAL LAYOUT & LABELS

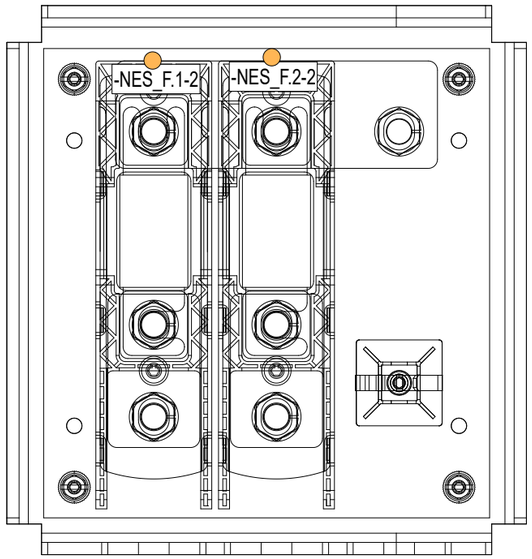

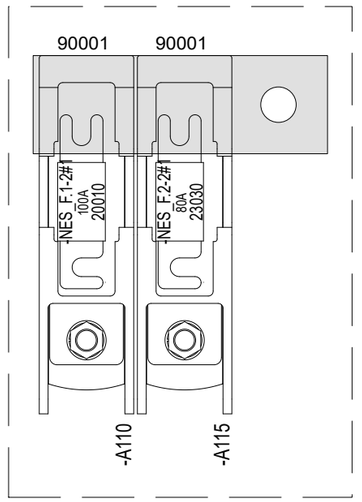

COVER LABEL INSTALLATION

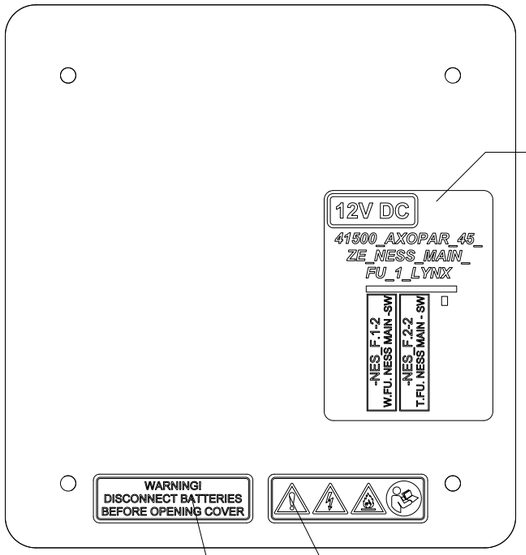

41630
AXOPAR 45 ZE NESS MAIN FU 1 MAP

36874
NAVIX LINE WARNING LABEL SYMBOLS

36873
NAVIX LINE WARNING LABEL FOR COVER

LABEL

Date of modification	Modified by	Description
14.5.2024	TuM	C1: 2004998: INTRODUCED DRAWING.

Date	14.5.2024
Drawing by	TuM
Sheet rev.	1
Project rev.	C

Copyright by NAVIX

Axopar	SEE EXP VIEW	41500	
Boat	Sub-product code	Product code	Project ID
45	ZE NESS. MAIN FU 1 - LYNX	HL	423 / 444
Boat model	Title	Loc	Sheet

EXP VIEW

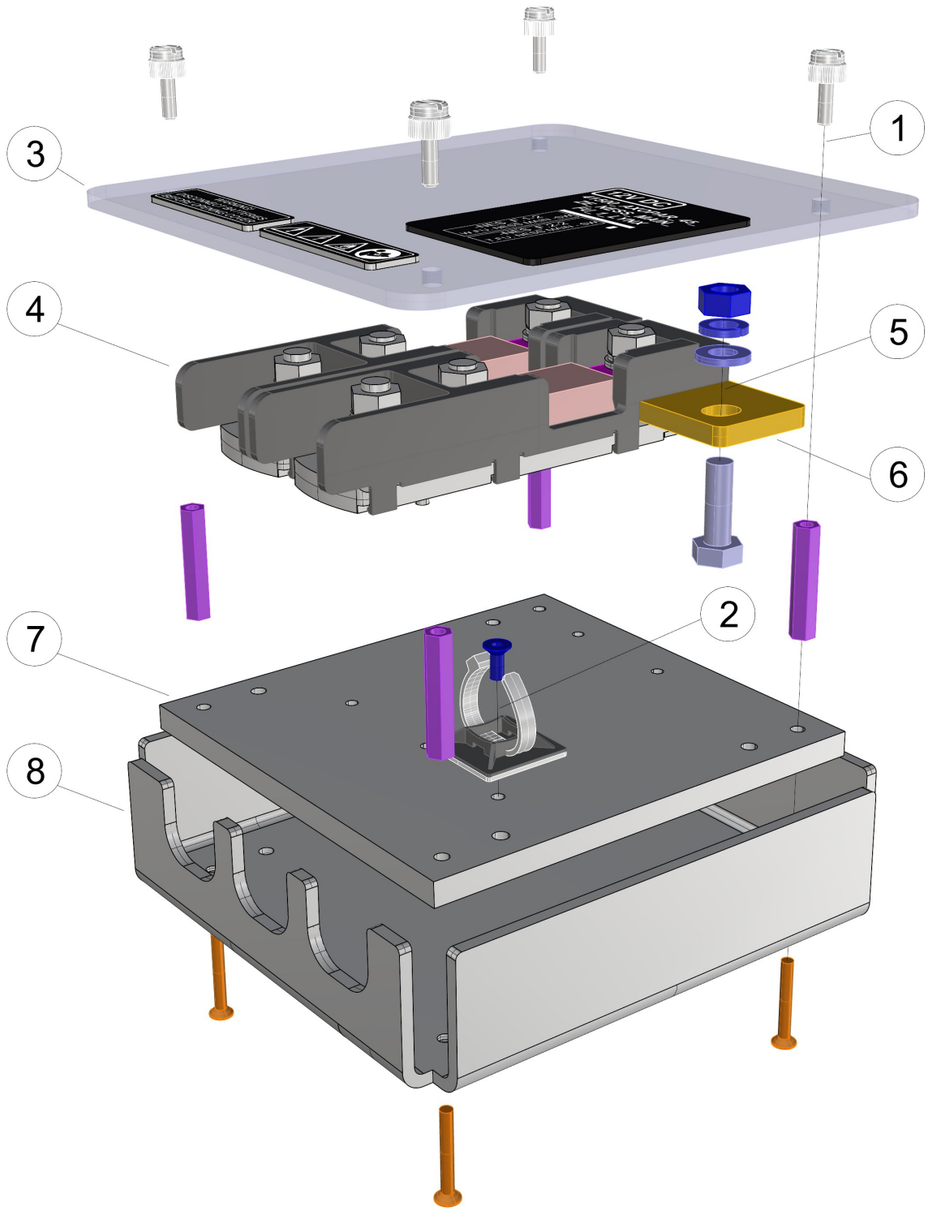

41500_AXOPAR_45_ZE_NESS_MAIN_FU_1_LYNX

1. 4PCS 41000 - Slotted Knurled Head Screw M4 12mm PA
   4PCS VMI32039 EXTENSION BOLT M4X35
   4PCS VMI30920 COUNTERSUNK HEAD SCREW HEX SOCKET M4X30 DIN7991

2. 1PCS VMI30914 COUNTERSUNK HEAD SCREW HEX SOCKET M4X10 DIN7991
   - ZIPTIE AND -HOLDER (AS IN DIAGRAM) -

3. 1PC 41629_AXOPAR_45_ZE_NESS_MAIN_FU_1_LYNX_COVER_V1
   + LABELS (AS IN DIAGRAM)

4. 1PC 90001_NAVIX_LINE_ANL_HOLDER_TYPE5

5. 1PC VMI32012 - HEX Nut M8 DIN934 C4
   1PC VMI32011 - Spring Lock washer M8 DIN127 C4
   1PC VMI32013 - Flat Washer for HEX bolts and nuts M8 DIN125A4 C4
   1PC VMI32018 - HEX Bolt Full thread M8X25 DIN933 C4

6. 1PC 39057_NAVIX_LINE_BUS_BAR_TYPE5C_3X

7. 1PC 41628_AXOPAR_45_ZE_NESS_MAIN_FU_1_LYNX_BASE_V1

8. 1PC 41627_AXOPAR_45_ZE_NESS_MAIN_FU_1_LYNX_BACK_V1

29.5.2024 / HH

Date of modification	Modified by	Description
14.5.2024	TuM	C1: 2004998: INTRODUCED DRAWING.

Date	14.5.2024
Drawing by	TuM
Sheet rev.	1
Project rev.	C

Copyright by

NAVIX

Axopar Boat	SEE EXP VIEW Sub-product code	41500 Product code	Project ID	
45 Boat model	ZE NESS. MAIN FU 1 - LYNX Title	HL Loc	424 / 444 Sheet	

GENERAL LAYOUT & LABELS

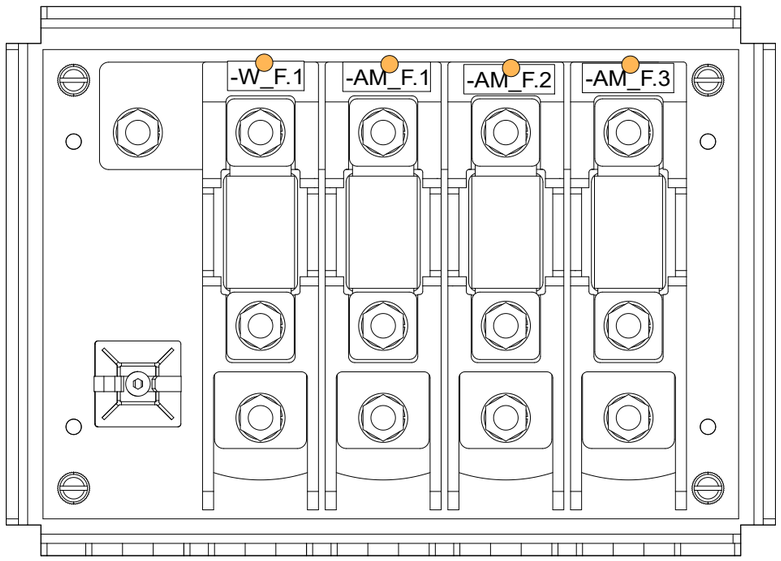

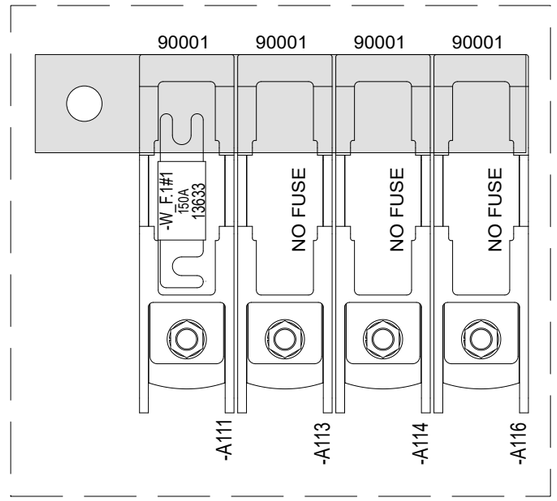

COVER LABEL INSTALLATION

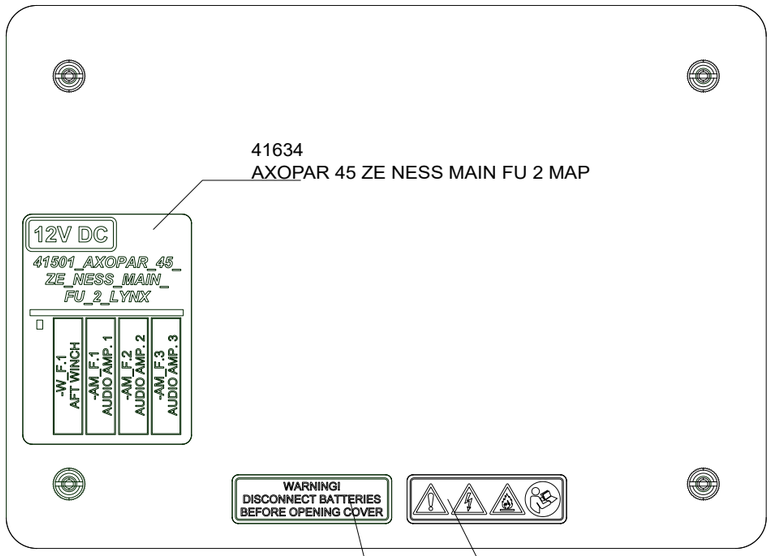

LABEL

14.5.2024	TuM	C1: 2004998: INTRODUCED DRAWING.	Date 14.5.2024	NAVIX	Axopar	SEE EXP VIEW	41501	
			Drawing by TuM		Boat	Sub-product code	Product code	Project ID
			Sheet rev. 1		45	ZE NESS. MAIN FU 2 - LYNX	HL	425 / 444
Date of modification	Modified by	Description	Project rev. C	Copyright by	Boat model	Title	Loc	Sheet

EXP VIEW

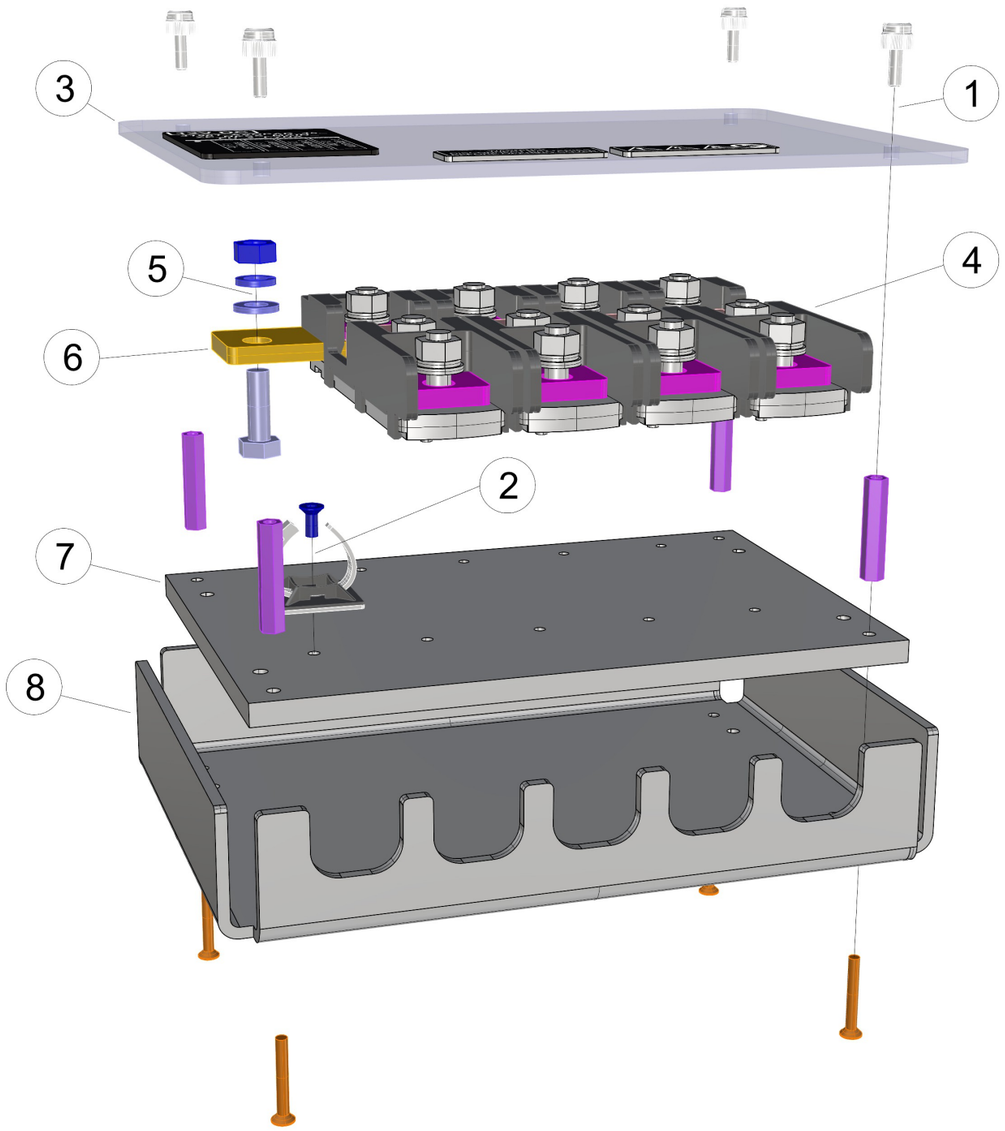

41501_AXOPAR_45_ZE_NESS_MAIN_FU_2_LYNX

1. 4PCS 41000 - Slotted Knurled Head Screw M4 12mm PA
   4PCS VMI32039 EXTENSION BOLT M4X35
   4PCS VMI30920 COUNTERSUNK HEAD SCREW HEX SOCKET M4X30 DIN7991

2. 1PCS VMI30914 COUNTERSUNK HEAD SCREW HEX SOCKET M4X10 DIN7991
   - ZIPTIE AND -HOLDER (AS IN DIAGRAM) -

3. 1PC 41637_AXOPAR_45_ZE_NESS_MAIN_FU_2_LYNX_COVER_V1
   + LABELS (AS IN DIAGRAM)

4. 4PCS 90001_NAVIX_LINE_ANL_HOLDER_TYPE5

5. 1PC VMI32012 - HEX Nut M8 DIN934 C4
   1PC VMI32011 - Spring Lock washer M8 DIN127 C4
   1PC VMI32013 - Flat Washer for HEX bolts and nuts M8 DIN125A4 C4
   1PC VMI32018 - HEX Bolt Full thread M8X25 DIN933 C4

6. 1PC 39268_NAVIX_LINE_BUS_BAR_TYPE5C_5X

7. 1PC 41636_AXOPAR_45_ZE_NESS_MAIN_FU_2_LYNX_BASE_V1

8. 1PC 41635_AXOPAR_45_ZE_NESS_MAIN_FU_2_LYNX_BACK_V1

29.5.2024 / HH

Date of modification	Modified by	Description
14.5.2024	TuM	C1: 2004998: INTRODUCED DRAWING.

Date	14.5.2024
Drawing by	TuM
Sheet rev.	1
Project rev.	C

Copyright by

NAVIX

Axopar Boat	SEE EXP VIEW Sub-product code	41501 Product code	Project ID	
45 Boat model	ZE NESS. MAIN FU 2 - LYNX Title	HL Loc	426 / 444 Sheet	

GENERAL LAYOUT/ LED STIPE INSTALLATION/ CABLE TIE MOUNT

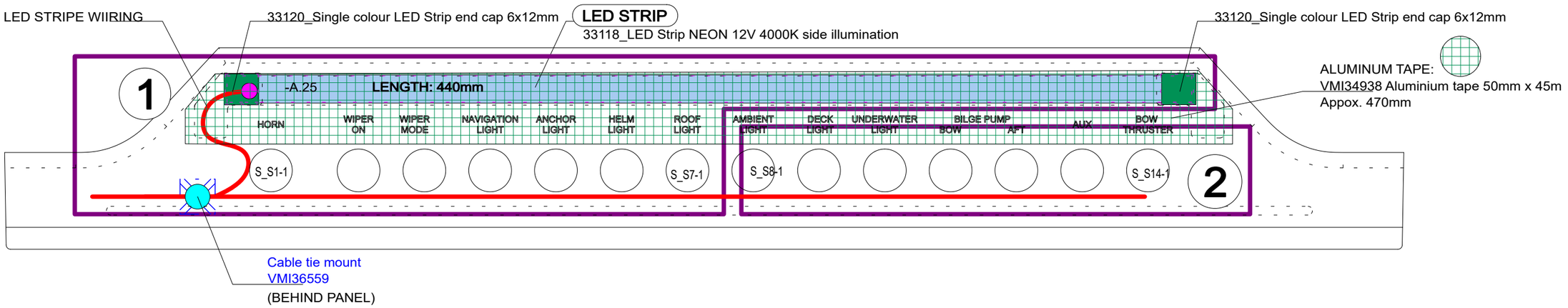

NOTE!
MAKE LED STRIP CONNECTIONS
AND TESTING ACCORDING TO THE
34061 LED-STRIPE ASSEMBLY GUIDE

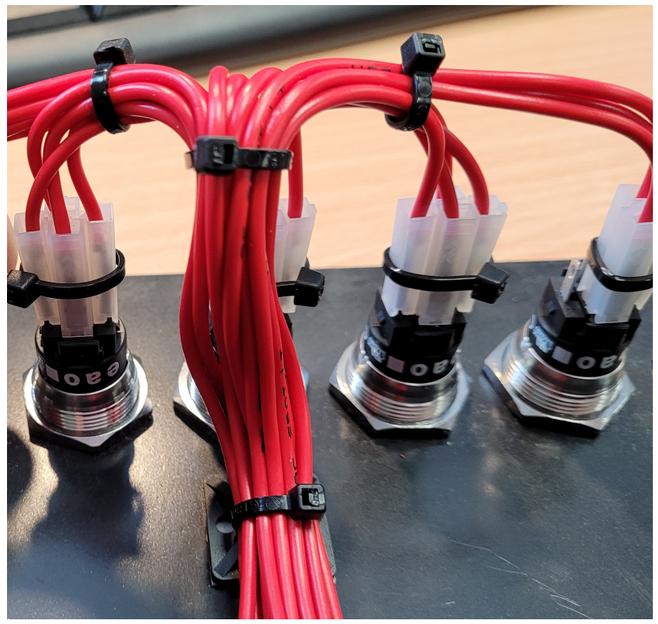

CABLE TIE MOUNT INSTALLATION

1. Install the Cable Tie Mount on the back of the panel, using double-sided tape attached. As in the pictures. (Clean the panel surface first.)
2. Attach the harness to the mount with the cable tie.
3. Make sure that the wires coming from the switches are not tight!

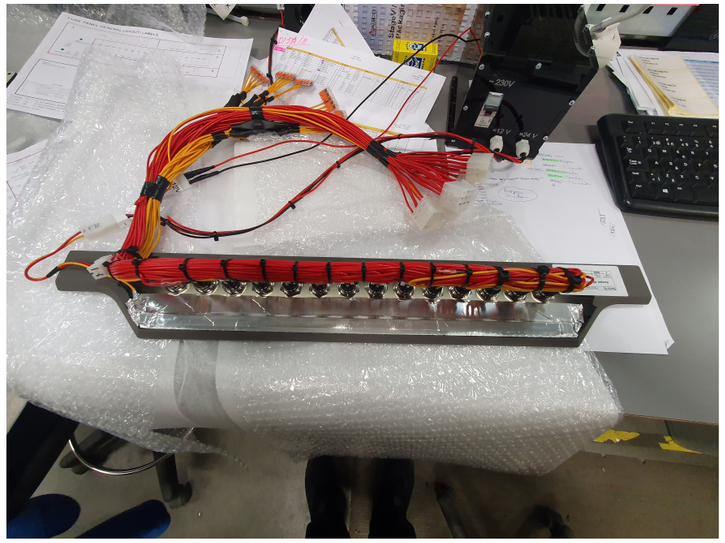

ALUMINUM TAPE INSTALLATION / LIGHT TESTING

1. Install aluminum tape on the back of the panel, on top of LED stripe. (Clean the panel surface first.)

   MAKE SURE THAT TAPE IS NOT IN CONTACT WITH SWITCH COMPONENTS.

2. Test Panel Light by connecting "-PL_X.1" to +12Vdc source.

MAKE SURE THE LED LIGHT DOES NOT SHINE THROUGH THE EDGES OF THE PANEL OR ANYWHERE ELSE! ONLY THE ENGRAVINGS MUST BE ILLUMINATED!

Date of modification	Modified by	Description
3.6.2024	TuM	C1: 2005065; INTRODUCED DRAWING.

Date	3.6.2024
Drawing by	TuM
Sheet rev.	1
Project rev.	C

Copyright by NAVIX.

Axopar Boat	41739 Sub-product code	41507 Product code	Project ID	
45 Boat model	SWITCH PANEL - LIGHT PACKAGE Title	HL Loc	427 / 444 Sheet	

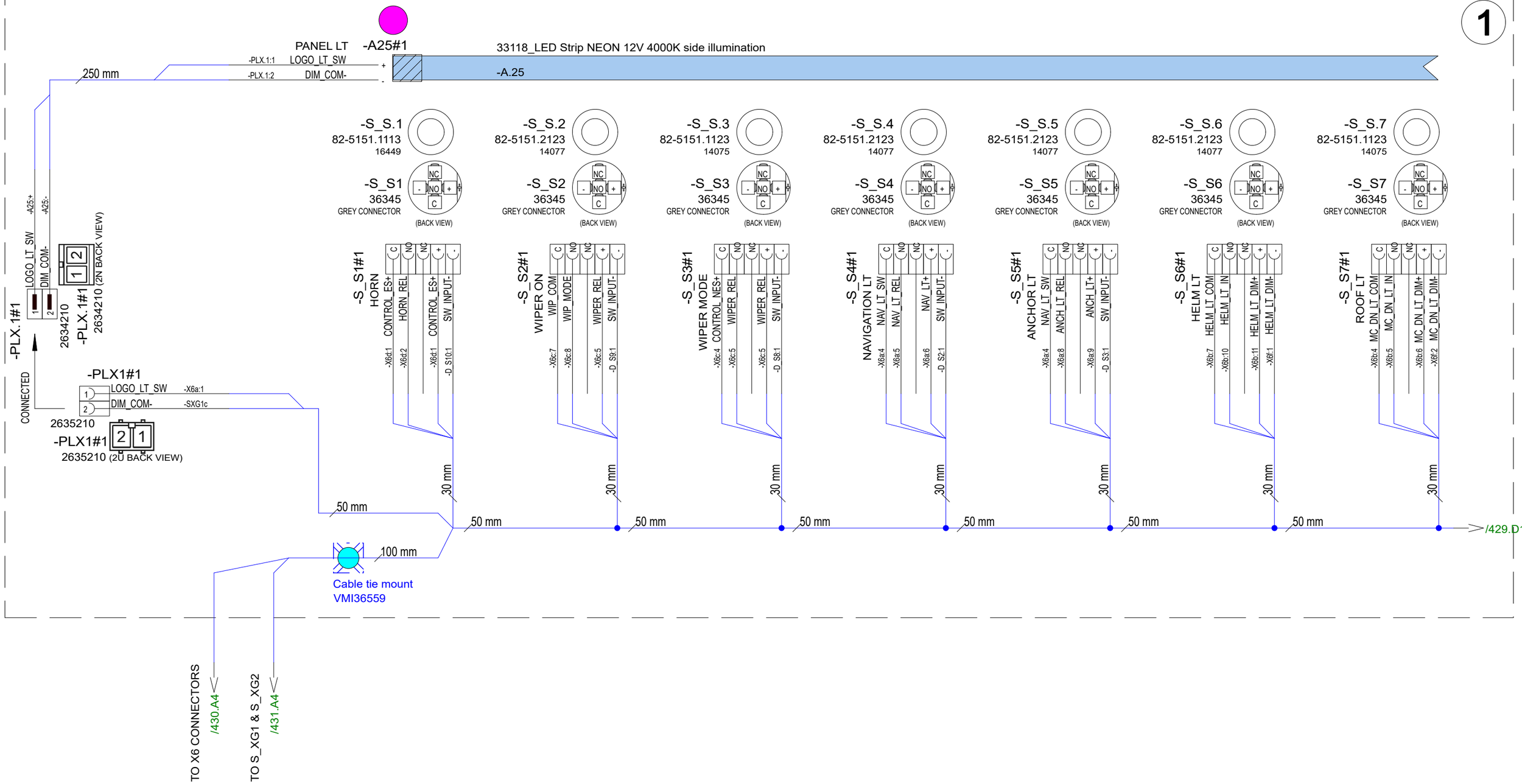

3.6.2024	TuM	C1: 2005065; INTRODUCED DRAWING.	Date 3.6.2024	NAVIX.	Axopar	41739	41507	
			Drawing by TuM		Boat	Sub-product code	Product code	Project ID
			Sheet rev. 1		45	SWITCH PANEL - LIGHT PACKAGE	HL	428 / 444
Date of modification	Modified by	Description	Project rev. C	Copyright by	Boat model	Title	Loc	Sheet

-A.25

-S_S.8-2
82-5151.1123
14075

-S_S8-2
36345
GREY CONNECTOR

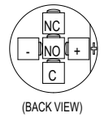

-S_S8-2#1
AMBIENT LT
-X6a:3 MC_AMB_LT_COM
-X6b:8 MC_AMB_LT_IN
-X6b:9 MC_AMB1_LT_DIM+
-X6f:3 MC_AMB1_LT_DIM-

-S_S.9
82-5151.2123
14077

-S_S9
36345
GREY CONNECTOR

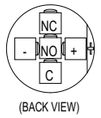

-S_S9#1
DECK LT
-X6b:1 DECK_LT_SW
-X6b:2 DECK_LT_REL
-X6b:3 DECK_LT+
-D_S4:1 SW_INPUT-

-S_S.10
82-5151.2123
14077

-S_S10
36345
GREY CONNECTOR

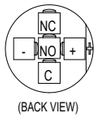

-S_S10#1
UNDER WATER LT
-X6c:1 CONTROL_NES+
-X6c:2 UW_LT_REL
-X6c:2 UW_LT_REL
-D_S7:1 SW_INPUT-

-S_S.11
82-5151.2123
14077

-S_S11
36345
GREY CONNECTOR

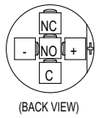

-S_S11#1
BILGE PUMP BOW
-X6e:1 FORE_BLG_S/A
-X6e:2 FORE_BLG_REL
-S_R2:2 FWD_BLG_R+
-D_S13:1 SW_INPUT-

-S_S.12
82-5151.2123
14077

-S_S12
36345
GREY CONNECTOR

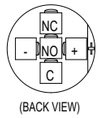

-S_S12#1
BILGE PUMP AFT
-X6d:4 AFT_BLG_1_S/A
-X6d:5 AFT_BLG_REL
-S_R1:1 AFT_BLG_R+
-D_S11:1 SW_INPUT-

-S_S.13
82-5151.2123
14077

-S_S13
36345
GREY CONNECTOR

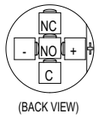

-S_S13#1
AUX
-S_S13X AUX_SW_IN
-S_S13X AUX_SW_NO
-S_S13X AUX_SW_NC
-S_S13X AUX_SW_LD+
-D_S17:1 SW_INPUT-

-S_S.14
82-5151.1123
14075

-S_S14
36345
GREY CONNECTOR

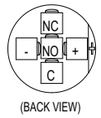

-S_S14#1
BOW THRUSTER
-X6e:4 ISM_BOW_TH_C
-X6e:11 INPUT-
-X6e:6 ISM_B_TH_SW_L+
-D_S14:1 SW_INPUT-

/428.D8

50 mm
50 mm
50 mm
30 mm
50 mm
30 mm
50 mm
30 mm
50 mm
30 mm
80 mm
80 mm

-S_S13X#1 AUX SW CONNECTION

X	AUX_SW_LD+	-S_S13:+
X	AUX_SW_NC	-S_S13:NC
X	AUX_SW_NO	-S_S13:NO
X	AUX_SW_IN	-S_S13:C

100 mm

3.6.2024	TuM	C1: 2005065; INTRODUCED DRAWING.	Date	3.6.2024	Axopar	41739	41507	
			Drawing by	TuM	Boat	Sub-product code	Product code	Project ID
			Sheet rev.	1	45	SWITCH PANEL - LIGHT PACKAGE	HL	429 / 444
Date of modification	Modified by	Description	Project rev.	C	Boat model	Title	Loc	Sheet

Copyright by NAVIX.

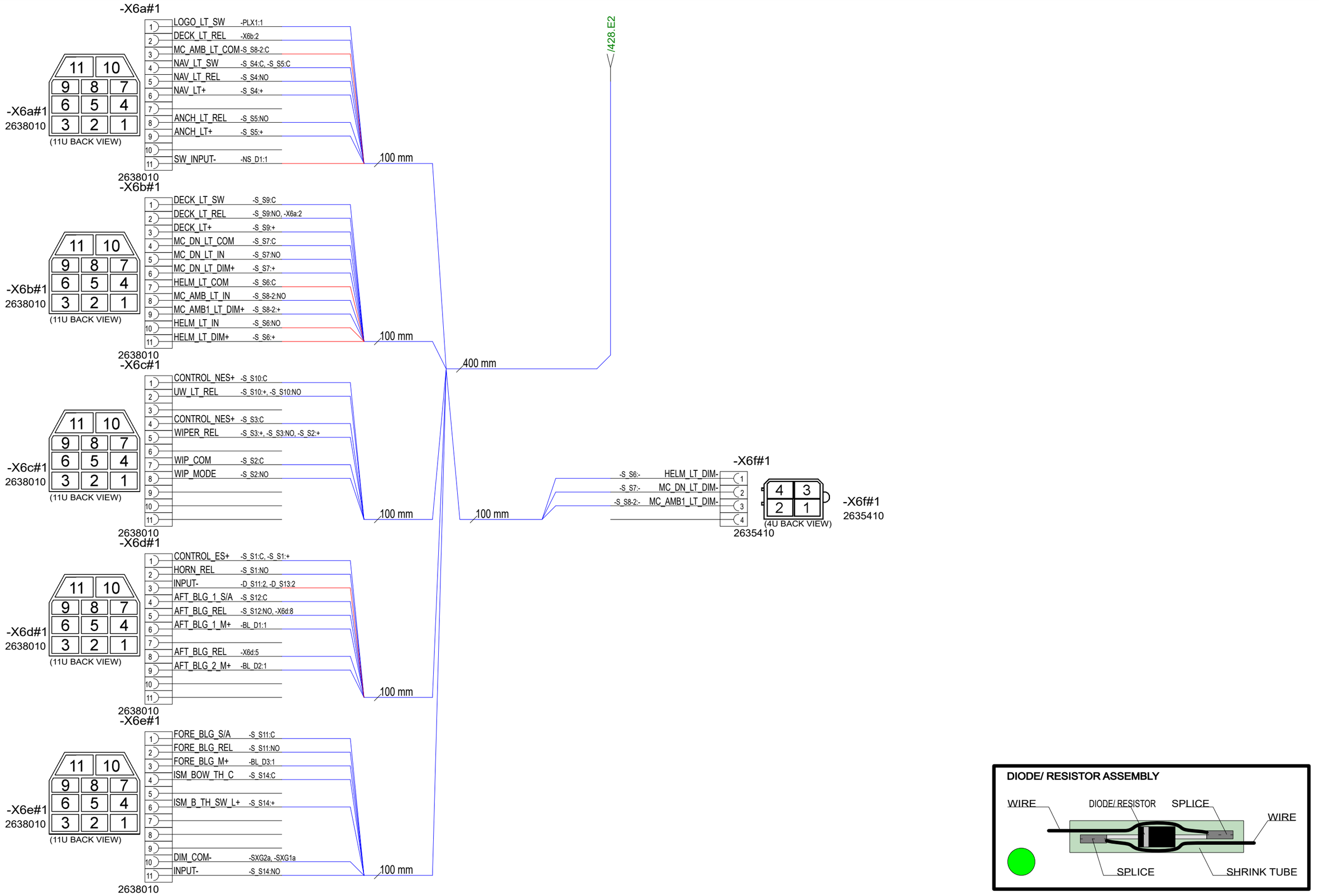

3.6.2024	TuM	C1: 2005065; INTRODUCED DRAWING.	Date	3.6.2024		Axopar			
			Drawing by	TuM		Boat	41739 Sub-product code	41507 Product code	Project ID
			Sheet rev.	1	NAVIX.	45	SWITCH PANEL - LIGHT PACKAGE	HL	430 / 444
Date of modification	Modified by	Description	Project rev.	C	Copyright by	Boat model	Title	Loc	Sheet

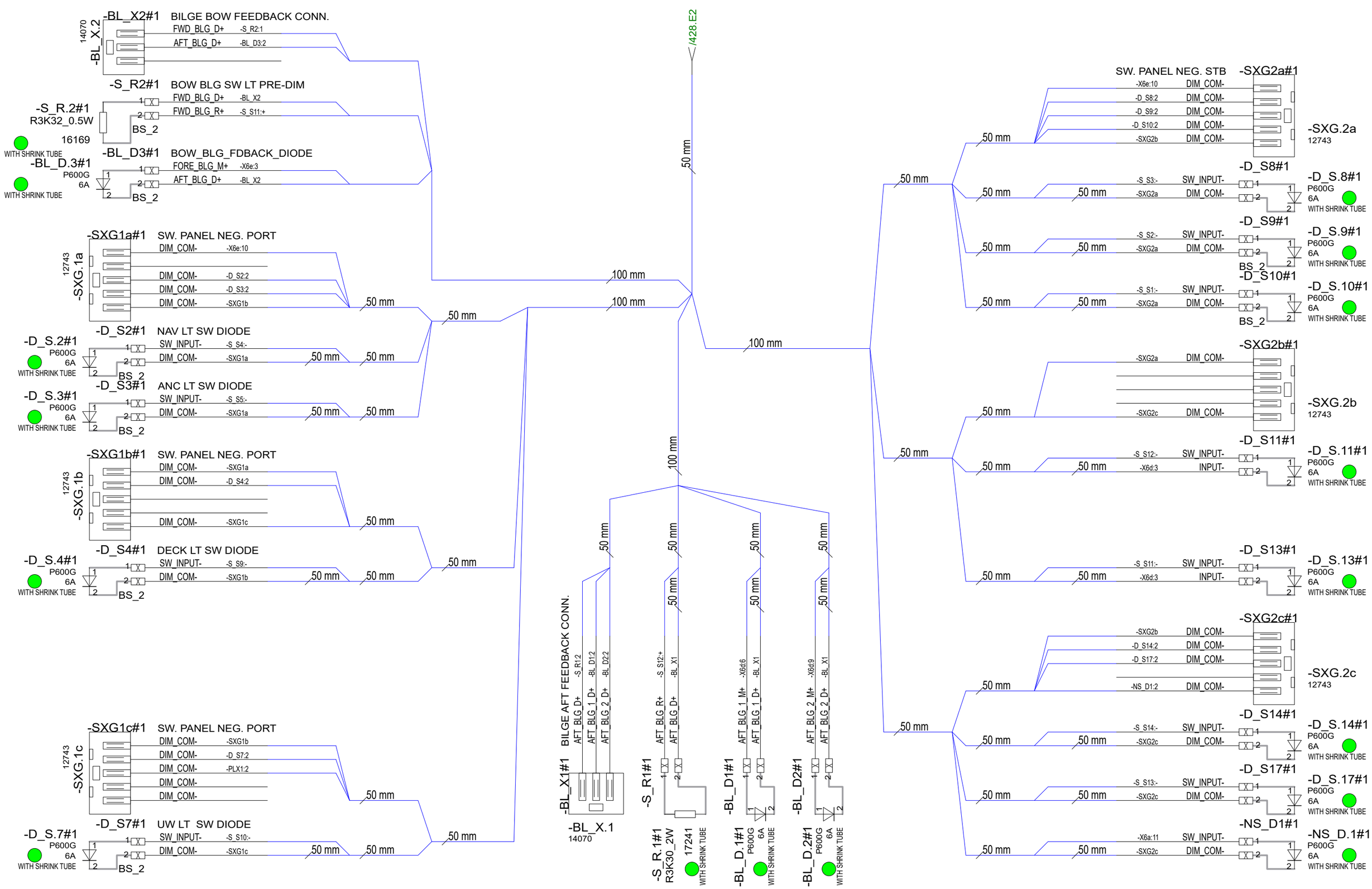

3.6.2024	TuM	C1: 2005065; INTRODUCED DRAWING.	Date 3.6.2024	NAVIX.	Axopar	41739	41507	
			Drawing by TuM		Boat	Sub-product code	Product code	Project ID
			Sheet rev. 1		45	SWITCH PANEL - LIGHT PACKAGE		HL
Date of modification	Modified by	Description	Project rev. C	Copyright by	Boat model	Title		Loc

Sheet 431/ 444

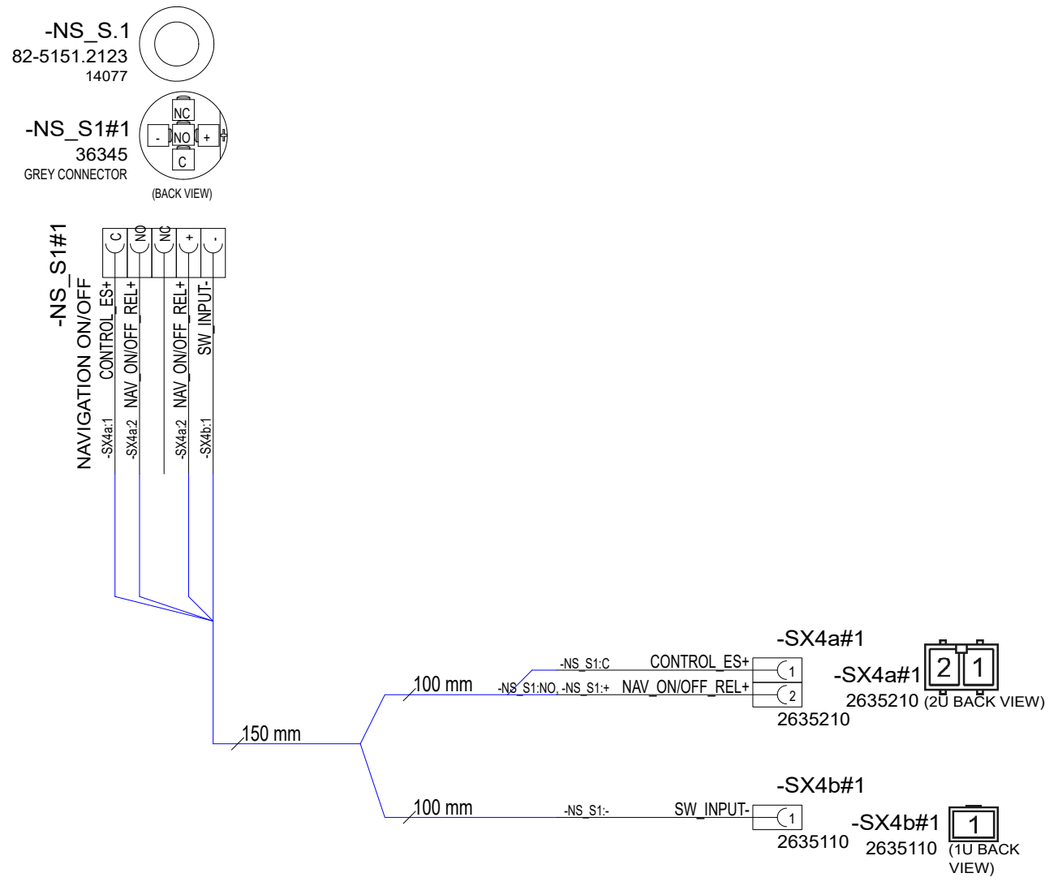

27.5.2024	TuM	C1: 2005065: INTRODUCED DRAWING.	Date 27.5.2024	Copyright by NAVIX	Axopar		41508	
			Drawing by TuM		Boat	Sub-product code	Product code	Project ID
			Sheet rev. 1		45	NAVIGATION SWITCH	HL	432 / 444
Date of modification	Modified by	Description	Project rev. C		Boat model	Title	Loc	Sheet

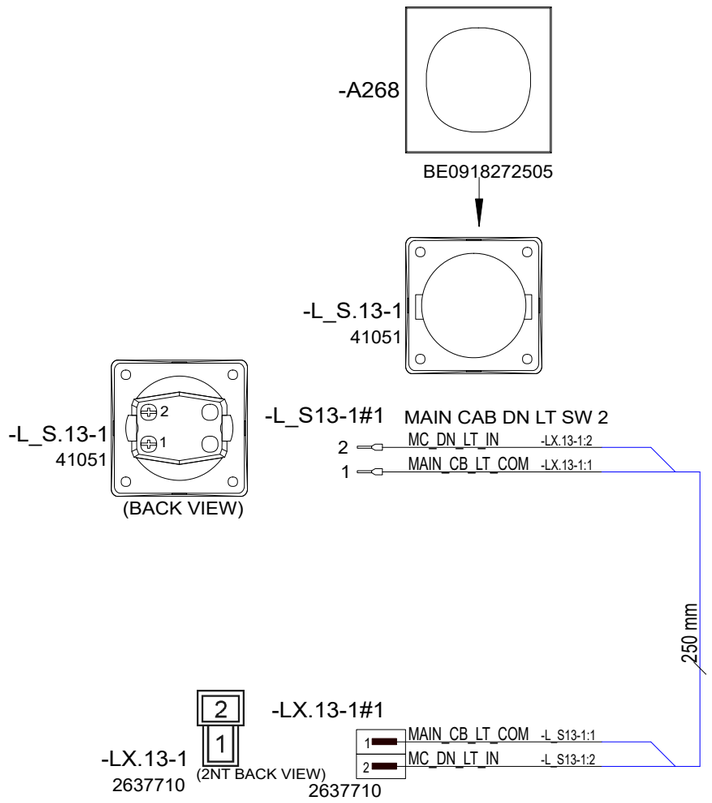

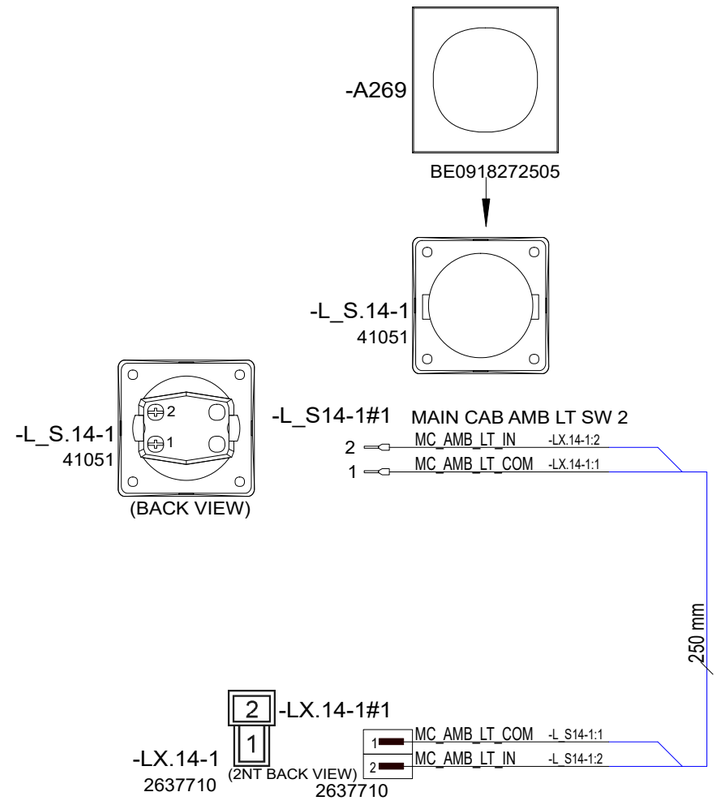

7.6.2024	TuM	C1: 2005065; INTRODUCED DRAWING.	Date 7.6.2024	NAVIX	Axopar		41518	
			Drawing by TuM		Boat	Sub-product code	Product code	Project ID
			Sheet rev. 1		45	MAIN CB LIGHT PACKAGE SWITHCES - XC	HL	433 / 444
Date of modification	Modified by	Description	Project rev. C	Copyright by	Boat model	Title	Loc	Sheet

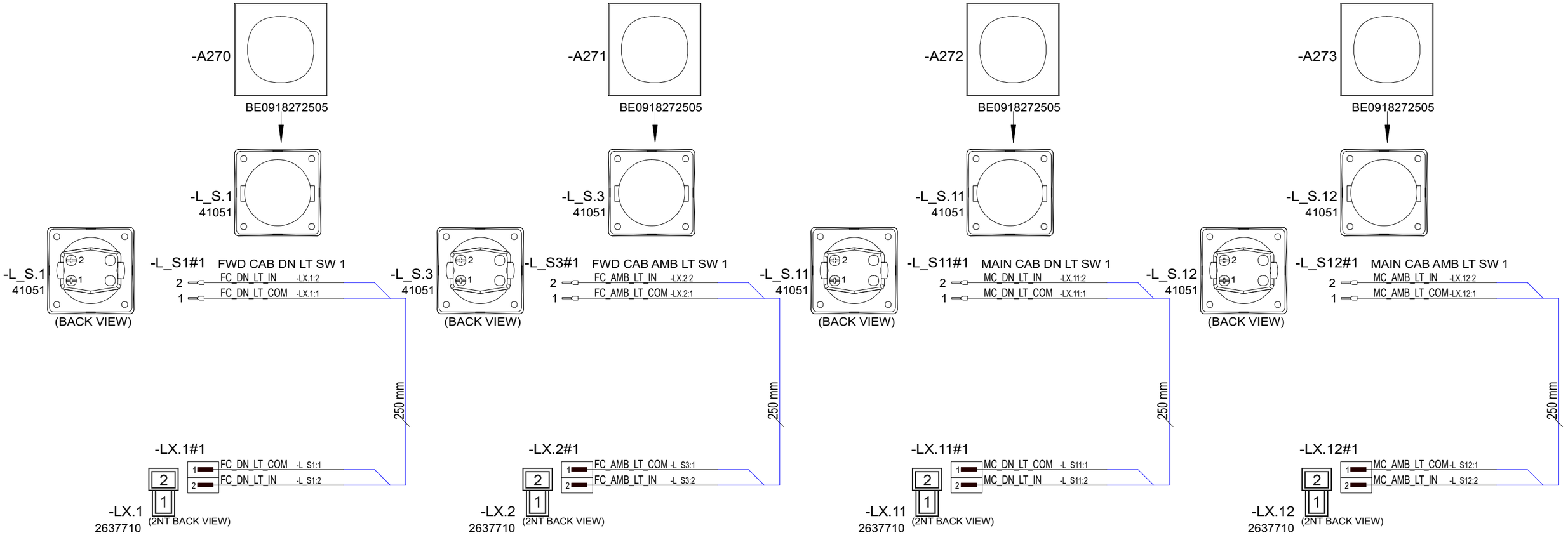

Date of modification	Modified by	Description
8.6.2024	TuM	C1: 2005065; INTRODUCED DRAWING.

Date	8.6.2024
Drawing by	TuM
Sheet rev.	1
Project rev.	C

Copyright by

NAVIX

Axopar Boat		41519 Product code	Project ID
45 Boat model	FWD CB STAIR LIGHT PACKAGE SW Title	HL Loc	434 / 444 Sheet

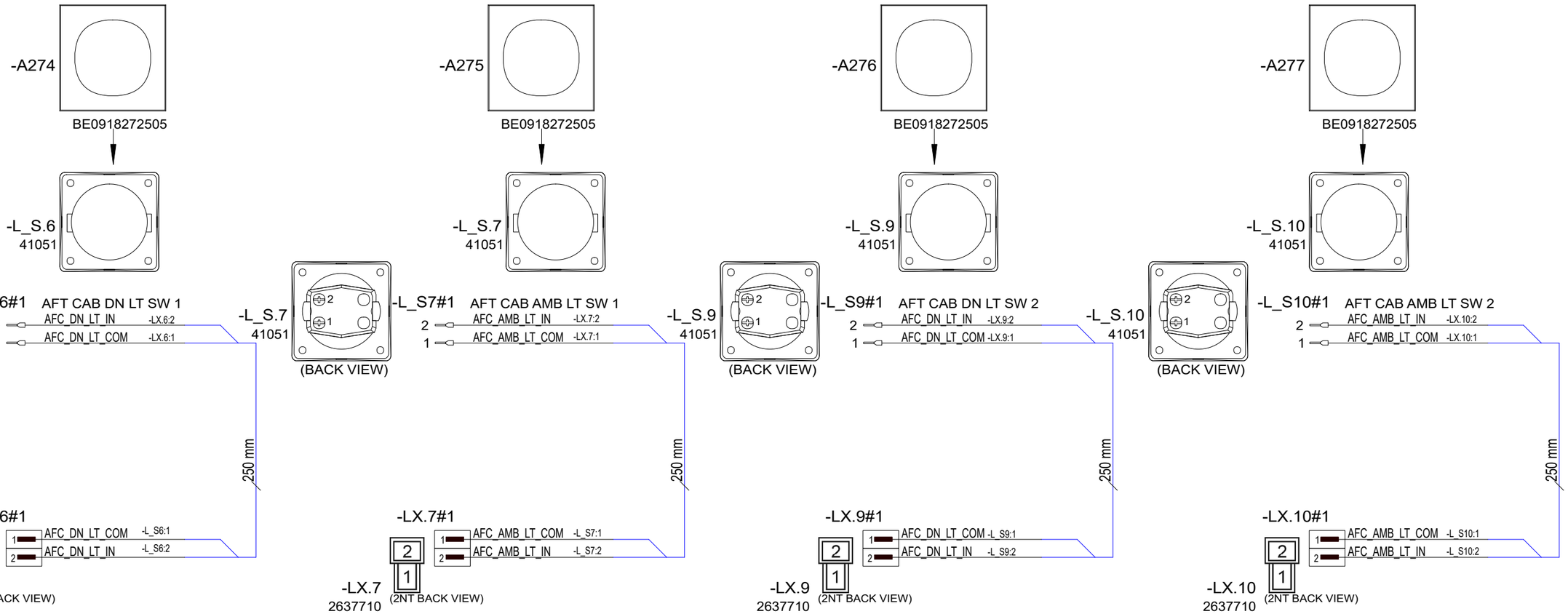

8.6.2024	TuM	C1: 2005065; INTRODUCED DRAWING.	Date	8.6.2024	NAVIX	Axopar		41520	
			Drawing by	TuM		Boat	Sub-product code	Product code	Project ID
			Sheet rev.	1		45	AFT CABIN LIGHT PACK SW	HL	435 / 444
Date of modification	Modified by	Description	Project rev.	C	Copyright by	Boat model	Title	Loc	Sheet

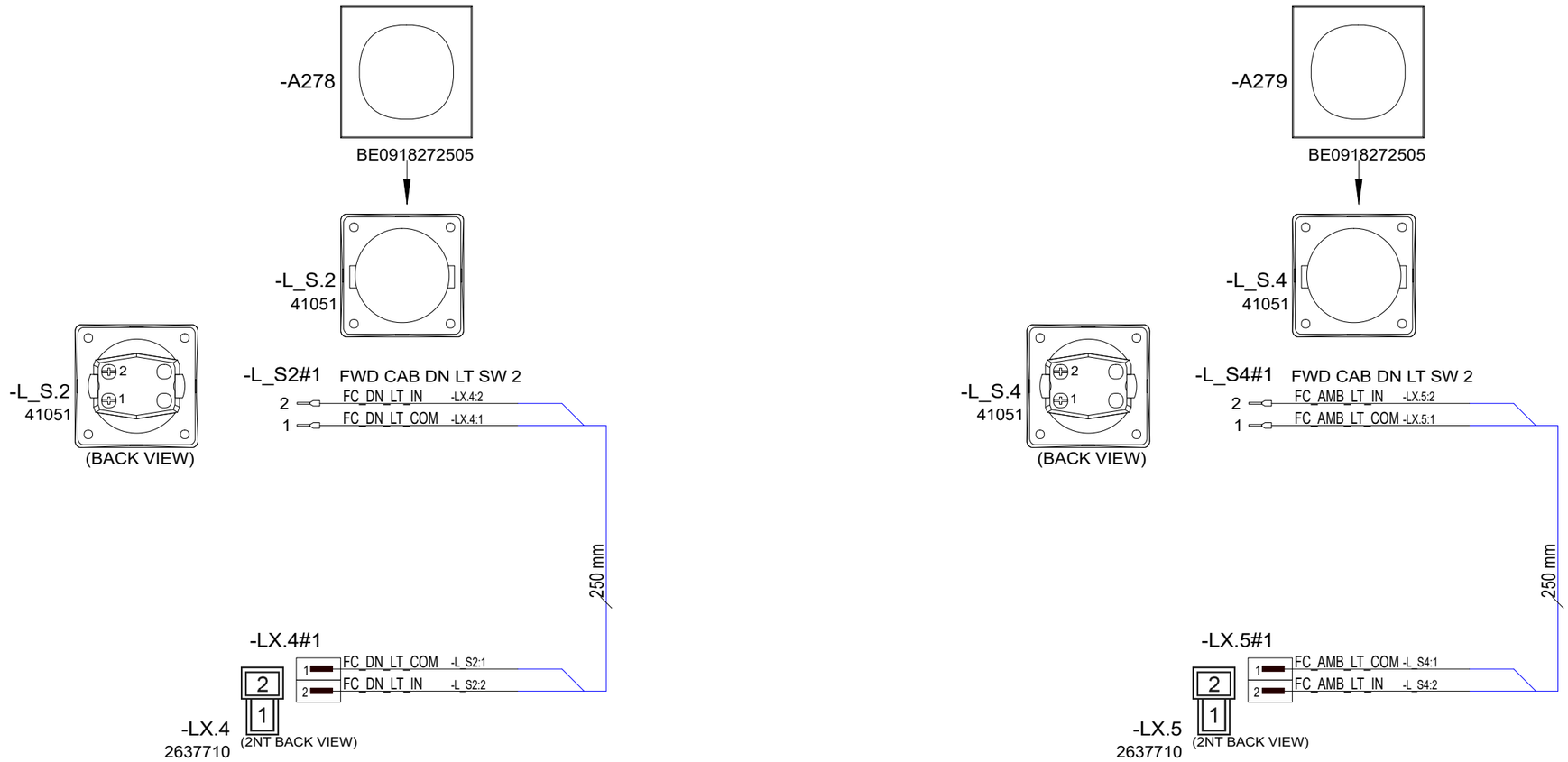

8.6.2024	TuM	C1: 2005065; INTRODUCED DRAWING.	Date 8.6.2024		Axopar		41777		
			Drawing by TuM		Boat	Sub-product code	Product code	Project ID	
			Sheet rev. 1		45	FWD CB GULL W. LIGHT PACKAGE SW	HL	436 / 444	
Date of modification	Modified by	Description	Project rev. C	Copyright by	Boat model	Title	Loc	Sheet	

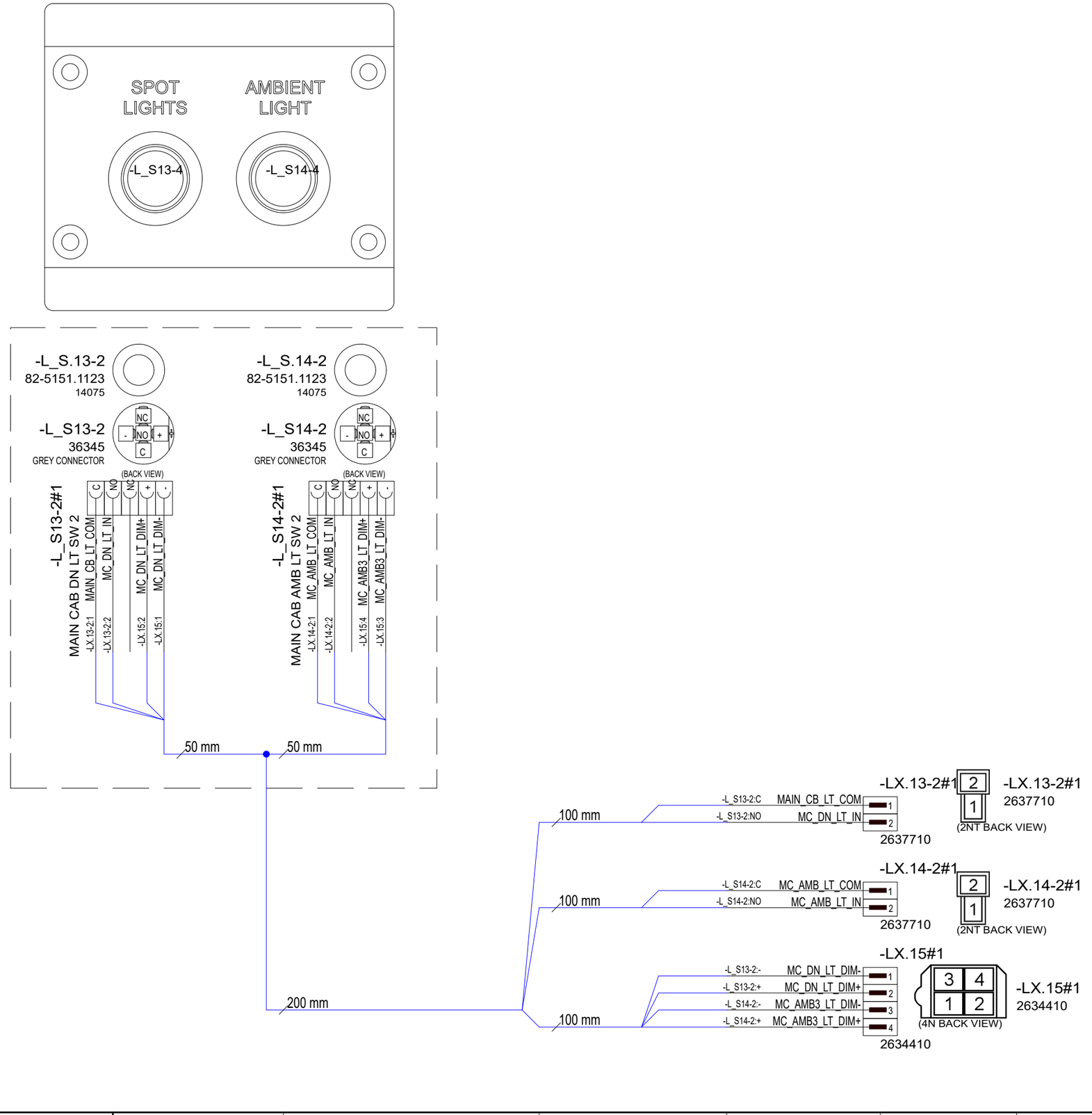

5.6.2024	TuM	C1: 2005065; INTRODUCED DRAWING.	Date	5.6.2024	NAVIX.	Axopar			
			Drawing by	TuM		Boat	41789 Sub-product code	41779 Product code	Project ID
			Sheet rev.	1		45	MAIN CB LT PACKAGE SW PANEL - OPEN	HL	437 / 444
Date of modification	Modified by	Description	Project rev.	C	Copyright by	Boat model	Title	Loc	Sheet

DIMMER WIRES THROUGH GLAND

DYMO LABEL ON TOP OF JUNCTION BOX COVER.

DYMO LABEL ON TOP OF DIMMER.

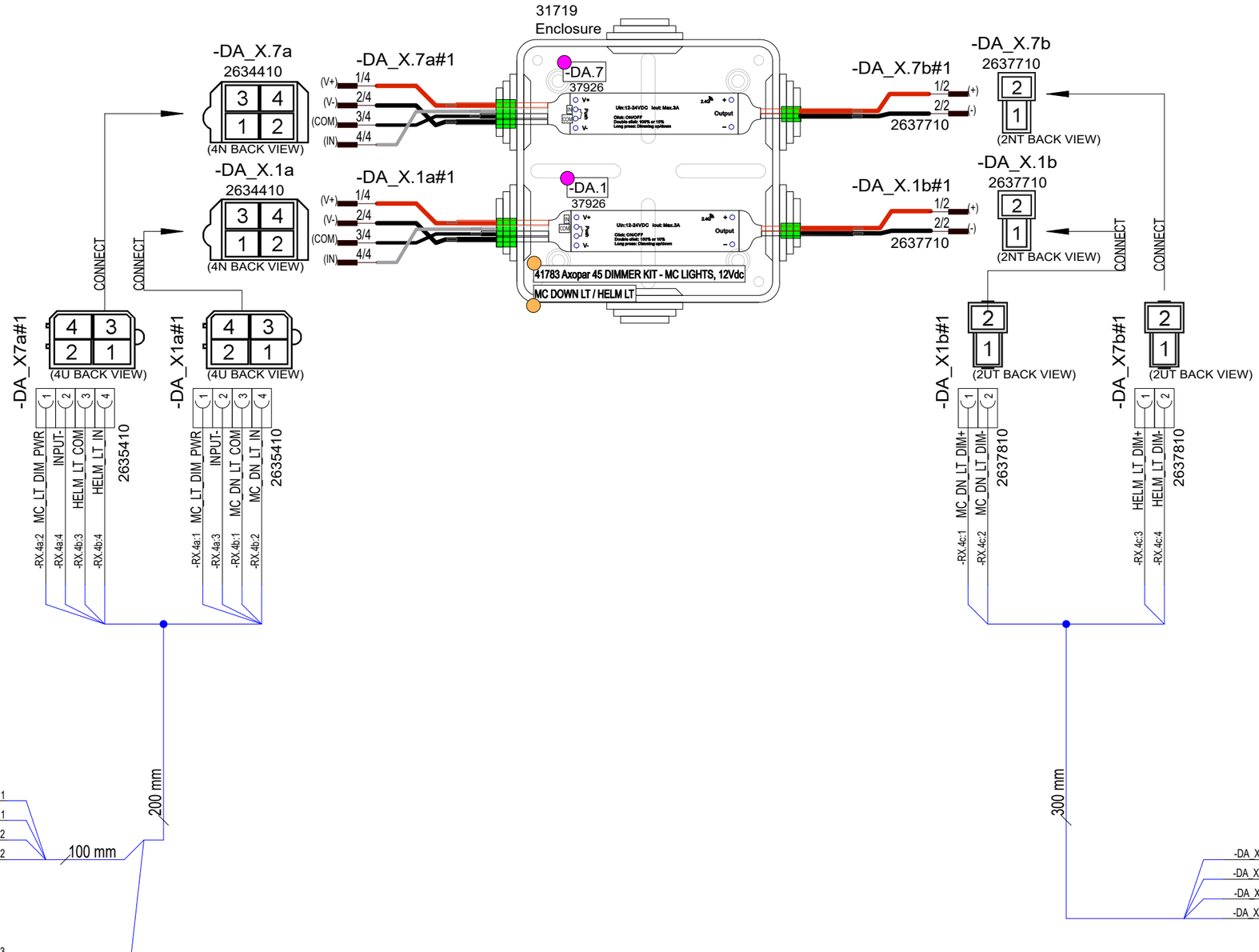

8.6.2024	TuM	C1: 2005065; INTRODUCED DRAWING.	Date	8.6.2024	NAVIX	Axopar		41783	
			Drawing by	TuM		Boat	Sub-product code	Product code	Project ID
			Sheet rev.	1		45	DIMMER KIT - MC LIGHTS	HL	438 / 444
Date of modification	Modified by	Description	Project rev.	C	Copyright by	Boat model	Title	Loc	Sheet

DIMMER WIRES THROUGH GLAND

DYMO LABEL ON TOP OF JUNCTION BOX COVER.

DYMO LABEL ON TOP OF DIMMER.

-DA_X.2a
2634410
(4N BACK VIEW)

-DA_X.2a#1
1/4
2/4
3/4
4/4

-DA_X.3a
2634410
(4N BACK VIEW)

-DA_X.3a#1
1/4
2/4
3/4
4/4

31719
Enclosure

-DA.2
37926

-DA.3
37926

-DA.4
37926

-DA_X.4a#1
1/4
2/4
3/4
4/4

-DA_X.4a
2634410
(4N BACK VIEW)

41783 Axopar 45 DIMMER KIT - MC LIGHTS, 12Vdc
MC AMB LT ROOF

-DA_X.2b#1
1/2 (+)
2/2 (-)

-DA_X.3b#1
1/2 (+)
2/2 (-)

-DA_X.4b#1
1/2 (+)
2/2 (-)

-DA_X.2b
2637710
(2NT BACK VIEW)

-DA_X.3b
2637710
(2NT BACK VIEW)

-DA_X.4b
2637710
(2NT BACK VIEW)

CONNECT

-DA_X2a#1
(4U BACK VIEW)
-DA_X2a:1 MC_LT_DIM_PWR
-DA_X2a:2 INPUT-
-DA_X2a:3 MC_AMB_LT_COM
-DA_X2a:4 MC_AMB_LT_IN
2635410
-DA_X3a:1, -DA_X4a:1
-DA_X3a:2, -DA_X4a:2
-DA_X3a:3, -DA_X4a:3
-DA_X3a:4, -DA_X4a:4

-DA_X3a#1
(4U BACK VIEW)
-DA_X2a:1, -DA_X4a:1
-DA_X2a:2, -DA_X4a:2
-DA_X2a:3, -DA_X4a:3
-DA_X2a:4, -DA_X4a:4
2635410
-DA_X3a:1 MC_LT_DIM_PWR
-DA_X3a:2 INPUT-
-DA_X3a:3 MC_AMB_LT_COM
-DA_X3a:4 MC_AMB_LT_IN

-DA_X4a#1
(4U BACK VIEW)
2635410

-DA_X4b#1
(2UT BACK VIEW)
-RX.4f:5 MC_AMB3_LT_DIM+
-RX.4f:6 MC_AMB3_LT_DIM-
2637810

-DA_X3b#1
(2UT BACK VIEW)
-RX.4f:3 MC_AMB2_LT_DIM+
-RX.4f:4 MC_AMB2_LT_DIM-
2637810

-DA_X2b#1
(2UT BACK VIEW)
-RX.4f:1 MC_AMB1_LT_DIM+
-RX.4f:2 MC_AMB1_LT_DIM-
2637810

200 mm

-RX.4d
2637710
(2NT BACK VIEW)

-RX.4d#1
1 MC_LT_DIM_PWR -DA_X2a:1
2 INPUT- -DA_X2a:2
100 mm
2637710

-RX.4e
2637710
(2NT BACK VIEW)

-RX.4e#1
1 MC_AMB_LT_COM -DA_X2a:3
2 MC_AMB_LT_IN -DA_X2a:4
100 mm
2637710

300 mm

-RX.4f#1
-DA_X2b:1 MC_AMB1_LT_DIM+ 1
-DA_X2b:2 MC_AMB1_LT_DIM- 2
-DA_X3b:1 MC_AMB2_LT_DIM+ 3
-DA_X3b:2 MC_AMB2_LT_DIM- 4
-DA_X4b:1 MC_AMB3_LT_DIM+ 5
-DA_X4b:2 MC_AMB3_LT_DIM- 6
2634610

-RX.4f
2634610
(6N BACK VIEW)

8.6.2024	TuM	C1: 2005065; INTRODUCED DRAWING.	Date	8.6.2024	Copyright by NAVIX	Axopar		41783	
			Drawing by	TuM		Boat	Sub-product code	Product code	Project ID
			Sheet rev.	1		45	DIMMER KIT - MC LIGHTS	HL	439 / 444
Date of modification	Modified by	Description	Project rev.	C		Boat model	Title	Loc	Sheet

DIMMER WIRES THROUGH GLAND

DYMO LABEL ON TOP OF JUNCTION BOX COVER.

DYMO LABEL ON TOP OF DIMMER.

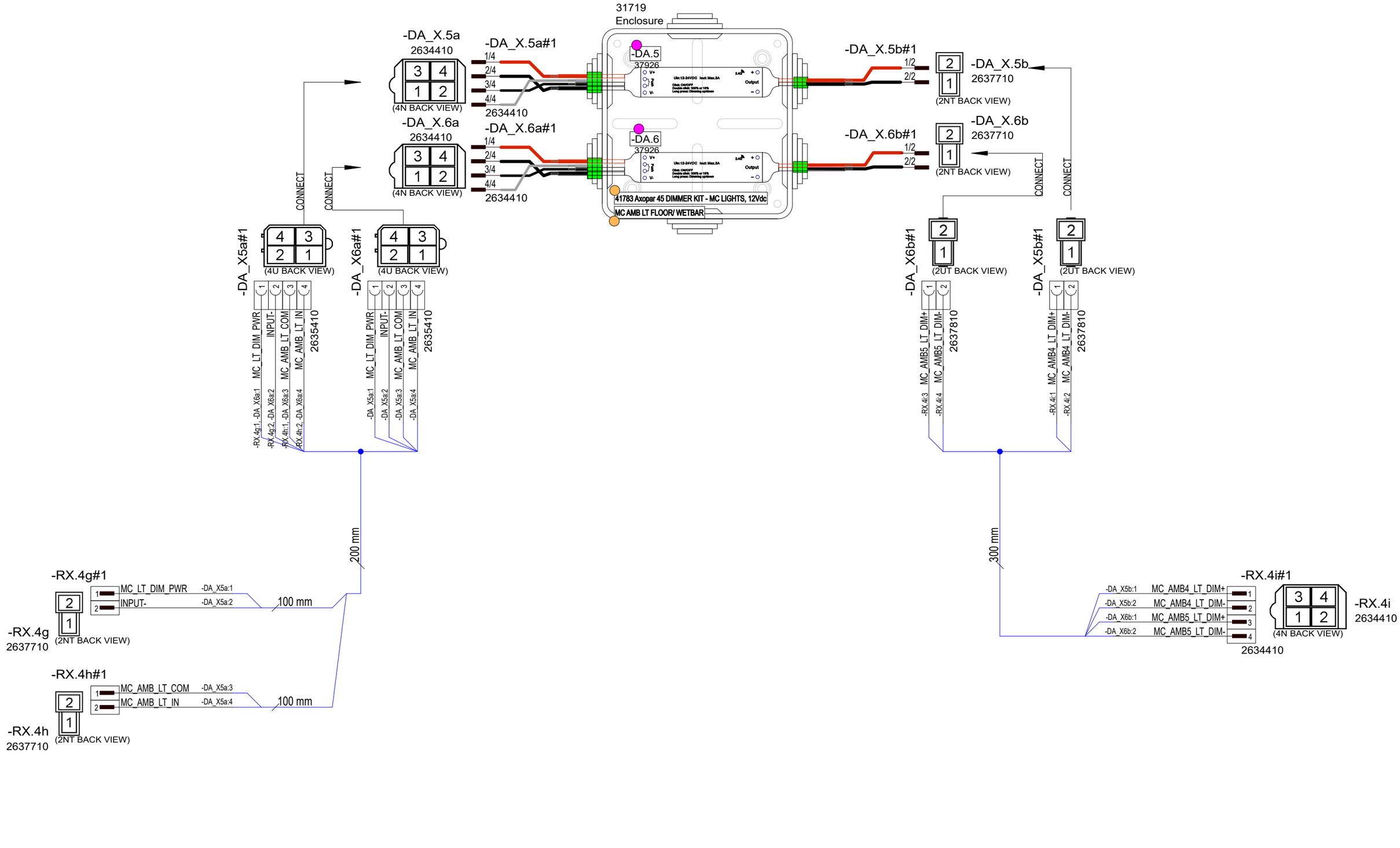

8.6.2024	TuM	C1: 2005065; INTRODUCED DRAWING.	Date	8.6.2024	NAVIX	Axopar		41783	
			Drawing by	TuM		Boat	Sub-product code	Product code	Project ID
			Sheet rev.	1		45	DIMMER KIT - MC LIGHTS	HL	440 / 444
Date of modification	Modified by	Description	Project rev.	C	Copyright by	Boat model	Title	Loc	Sheet

DIMMER WIRES THROUGH GLAND

DYMO LABEL ON TOP OF JUNCTION BOX COVER.

DYMO LABEL ON TOP OF DIMMER.

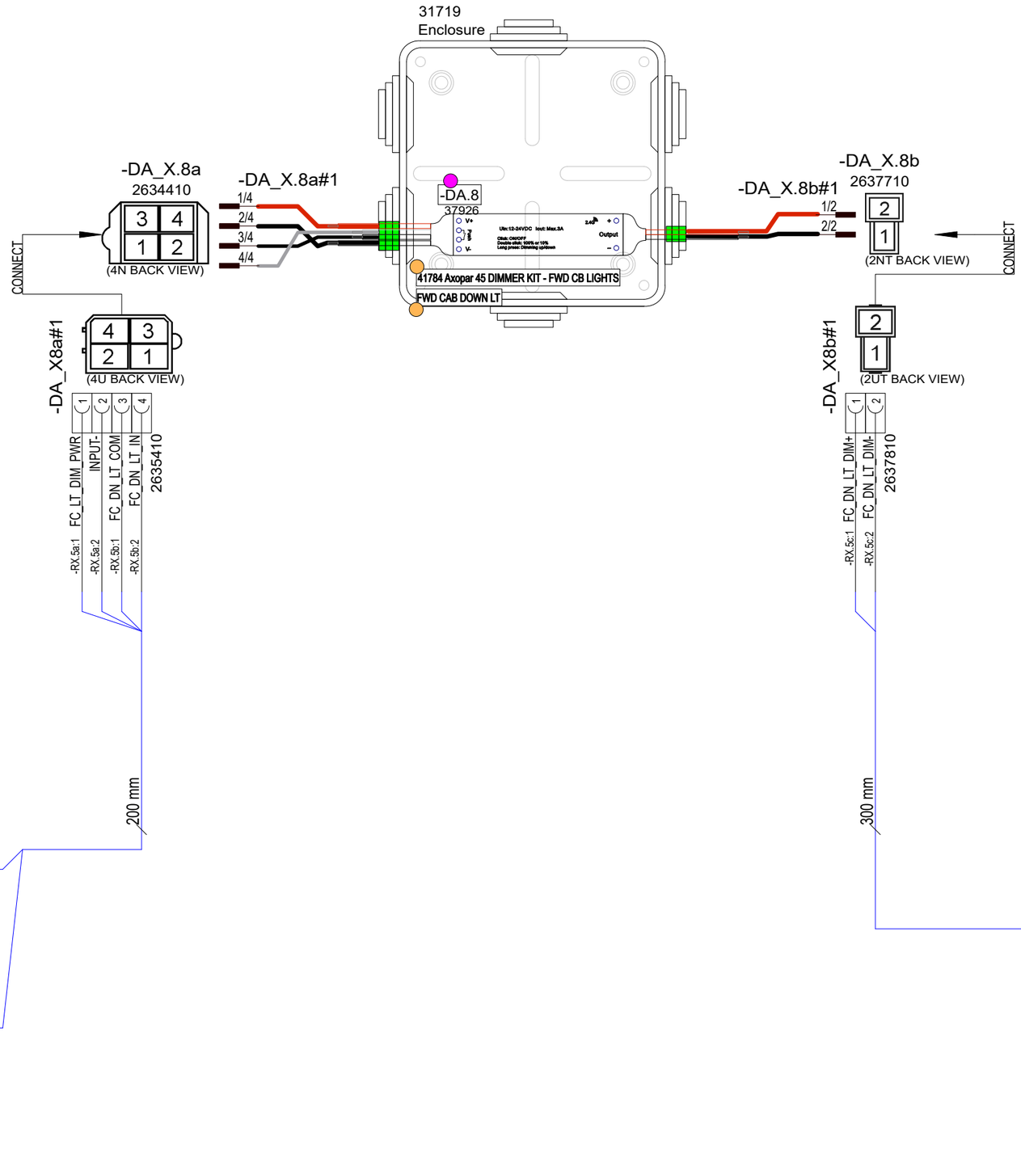

9.6.2024	TuM	C1: 2005065; INTRODUCED DRAWING.	Date	9.6.2024	NAVIX	Axopar		41784	
			Drawing by	TuM		Boat	Sub-product code	Product code	Project ID
			Sheet rev.	1		45	DIMMER KIT - FWD CB LIGHTS	HL	441/ 444
Date of modification	Modified by	Description	Project rev.	C	Copyright by	Boat model	Title	Loc	Sheet

DIMMER WIRES THROUGH GLAND

DYMO LABEL ON TOP OF JUNCTION BOX COVER.

DYMO LABEL ON TOP OF DIMMER.

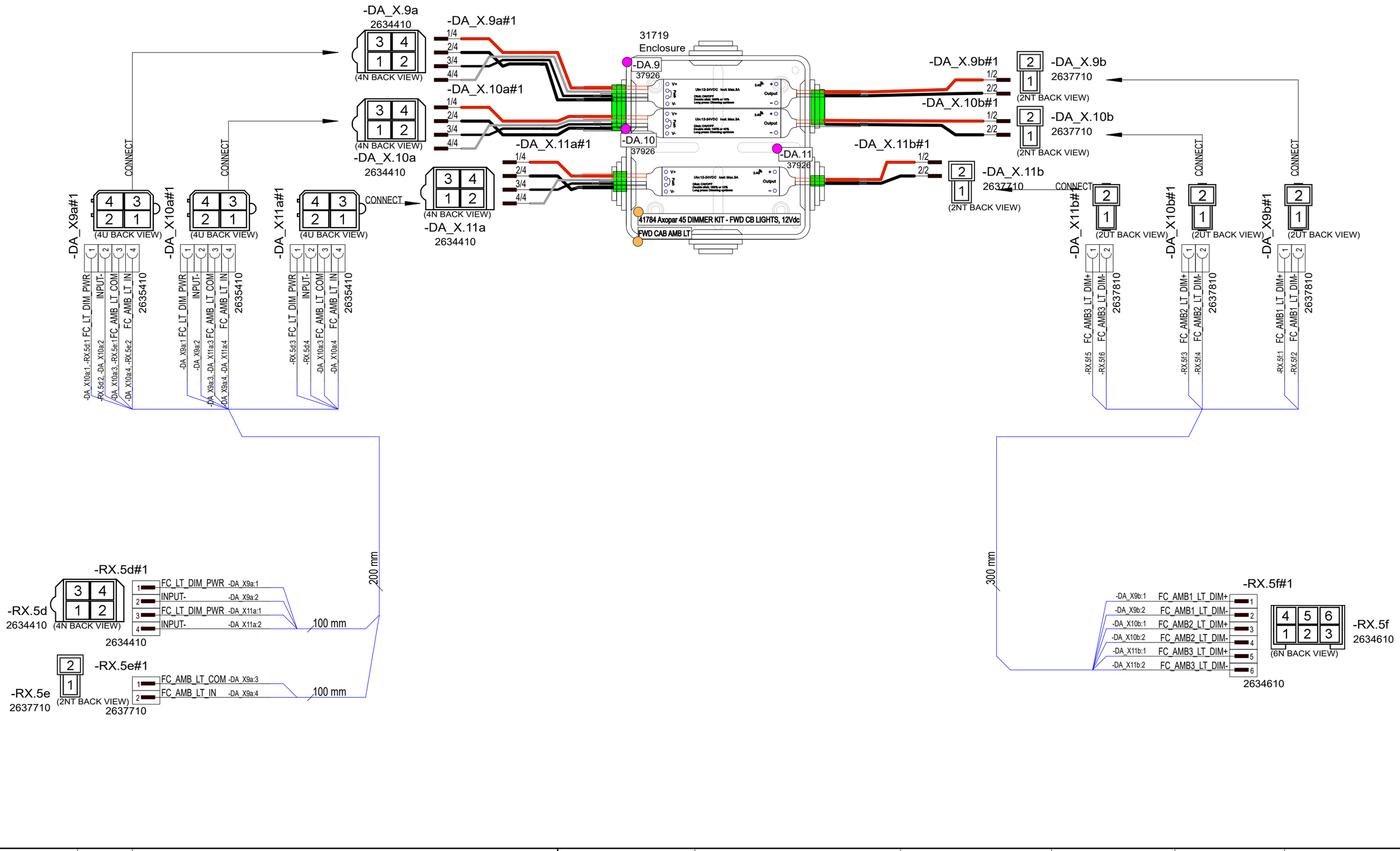

9.6.2024	TuM	C1: 2005065; INTRODUCED DRAWING.	Date 9.6.2024	NAVIX	Axopar		41784	
			Drawing by TuM		Boat	Sub-product code	Product code	Project ID
			Sheet rev. 1		45	DIMMER KIT - FWD CB LIGHTS	HL	442 / 444
Date of modification	Modified by	Description	Project rev. C	Copyright by	Boat model	Title	Loc	Sheet

DIMMER WIRES THROUGH GLAND

DYMO LABEL ON TOP OF JUNCTION BOX COVER.

DYMO LABEL ON TOP OF DIMMER.

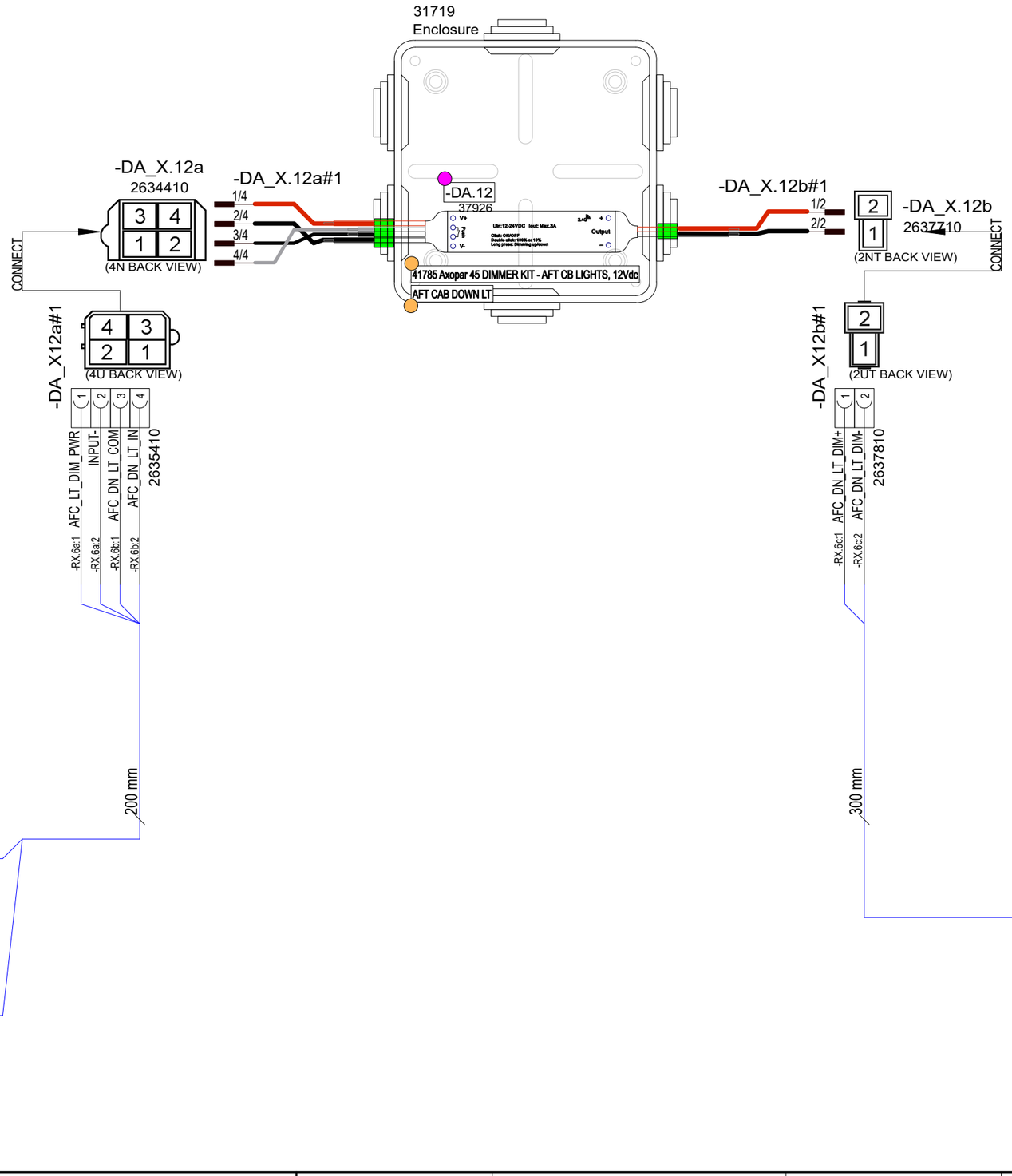

9.6.2024	TuM	C1: 2005065; INTRODUCED DRAWING.	Date	9.6.2024	NAVIX	Axopar		41785	
			Drawing by	TuM		Boat	Sub-product code	Product code	Project ID
			Sheet rev.	1		45	DIMMER KIT - AFT CB LIGHTS	HL	443 / 444
Date of modification	Modified by	Description	Project rev.	C	Copyright by	Boat model	Title	Loc	Sheet

DIMMER WIRES THROUGH GLAND

DYMO LABEL ON TOP OF JUNCTION BOX COVER.

DYMO LABEL ON TOP OF DIMMER.

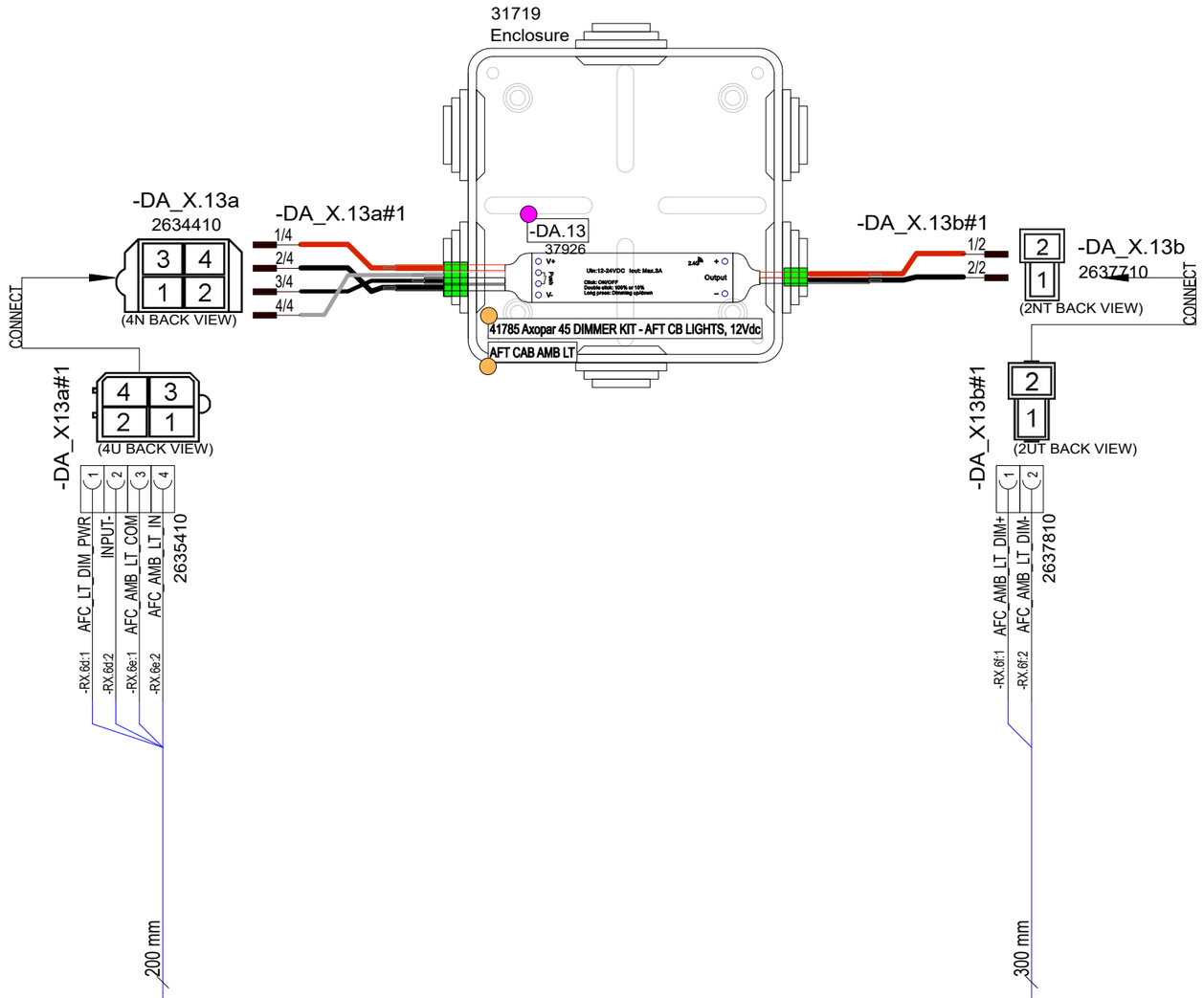

9.6.2024	TuM	C1: 2005065; INTRODUCED DRAWING.	Date	9.6.2024	NAVIX	Axopar		41785	
			Drawing by	TuM		Boat	Sub-product code	Product code	Project ID
			Sheet rev.	1		45	DIMMER KIT - AFT CB LIGHTS	HL	444 / 444
Date of modification	Modified by	Description	Project rev.	C	Copyright by	Boat model	Title	Loc	Sheet

12 Appendix IV: AIS Decontamination – North America

According to

ABYC T-32 Design and Construction in Consideration of Aquatic Invasive Species 7/21

© 2021 American Boat & Yacht Council, Inc

Table of Contents

1 Decontamination criteria based on UMPS III, Table 3.....3

2 Example of AIS Owner's Manual Information.....4

3 Additional boat-specific recommendations.....6

© 2021 Axopar Boats

1 Decontamination criteria based on UMPS III, Table 3

The table is a summary of scientific research indicating the lethal water temperature at point of contact and duration for decontamination. Information is grouped by the location of the boat that is targeted and the life form of Dreissenid mussel targeted (e.g., adult mussel or veliger). Please refer to the *Student Training Curriculum for Watercraft Inspectors and Decontaminators to Prevent and Contain the Spread of Aquatic Invasive Species in the USA* for complete step by step procedures.

	Boat part/ location	Water temperature	Duration[1] (sec)	Type of application	Target life stage
Exterior	Hull	140°F	10	High pressure spray[2]	Adult
	Trailer	140°F	70	Low pressure spray[3]	Adult
	PFDs, anchor, paddle	140°F	10	Low pressure spray	Adult or Veliger
Propulsion system	Gimbal	140°F	132	Low pressure spray	Adult
	Engine	140°F[5], [6]	See note[7].	Flush[6]	Veliger
Interior	Ballast tanks	120°F	130	*Low risk* – Flush[4]	Veliger
				High risk – Fill and flush	
	Live well/bait well	120°F	130	Low pressure spray or flush	Veliger
	Bilge	120°F	130	Flush or low pressure spray	Veliger

1) The times listed are the minimum times necessary to achieve mortality.
2) High pressure = 3000 psi.
3) Low pressure = using the pressure from the decontamination unit with no nozzle, not to exceed 60 psi (essentially a garden hose flow).
4) Flush = adding water to a compartment of a boat to treat or force the water out.
5) These temperatures denote the exit temperature (i.e., temperature of water exiting the boat not exiting the wand or flush attachment).
6) When flushing engines with a dedicated connection (not muffs), the pressure should be limited to less than 60 psi to prevent internal engine damage. The maximum input temperature during flushing should not exceed 140°F.
7) *NOTE: Engine flushing relies on the exit temperature as a guideline for decontamination duration.*

© 2021 Axopar Boats

2 Example of AIS Owner's Manual Information

Aquatic invasive species

Aquatic invasive species (AIS) are plants and animals that occur in waters in which they are not native and whose introduction causes or is likely to cause economic or environmental damage or harm to human health. AIS have a negative impact on the waterway, its native species, and recreational and commercial uses of the waterway.

As responsible boaters and citizens, each boat owner should do their part to prevent the spread of these aquatichitchhikers. In many cases, it is also required by law. Check local regulations for any waterway where you will boat.

After each boating trip, follow these three simple steps before you leave the water access to stop the spread of AIS: Clean, Drain, and Dry. This is the boater's way to help protect the environment from the damage that AIS can cause.



Clean

Inspect and remove all aquatic plants, animals, mud, and debris from the boat, engine, trailer, anchor, and any watersports equipment.

- Rinse, scrub or wash, as appropriate, away from storm drains, ditches, or waterways.
- Rinse watercraft, trailer, and equipment with hot water, when possible.
- Flush motor according to owner's manual.

Drain

Completely drain all water from the boat and its compartments, including but not limited to the bilge, wells, lockers, ballast tanks or bags, bait containers, engines, and outdrives.

Dry

Allow the boat to completely dry before visiting any other bodies of water.

© 2021 Axopar Boats

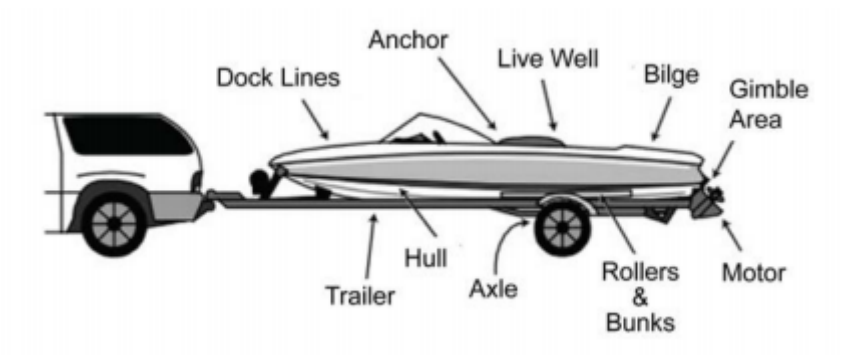

NOTE: Some localities may require inspection or decontamination before and/or after launching. Check state and local laws and regulations for requirements prior to traveling to go boating.

© 2021 Axopar Boats

3 Additional boat-specific recommendations

Nonmotorized watercraft

Canoes, rafts, kayaks, rowboats, paddleboats, inflatables, sculls, and other nonmotorized recreational watercraft also require proper treatment.

- **Clean** straps, gear, paddles, floats, ropes, anchors, dip nets, and trailer before leaving the water body.
- **Dry** everything completely between each use and before storing.
- **Wear** quick-dry footwear or bring a second pair of footwear with you when portaging between waterbodies.

Sailboats

- **Clean** centerboard, bilge board, wells, rudderpost, trailer, and other equipment before leaving the water body.
- **Drain** water from boat, motor, bilge, ballast, wells, and portable bait containers before leaving the water body.

Motorized watercraft

- **Inspect** and **clean** motor or engine, including the gimbal area; trailer, including axles, bunkers, and rollers; anchors; dock lines; and equipment before leaving the water body.
- **Drain** live wells, bait containers, ballast and bilge tanks, and engine cooling systems.

Jet boats and personal watercraft (PWCs)

- **Inspect** and **clean** hull, trailer, intake grate, and steering nozzle, etc.
- **Clean** hull, trailer, intake grate, and steering nozzle, etc before leaving the water access.
- **Run** engine 5-10 sec to blow out excess water and vegetation from internal drive before leaving the waterbody.

© 2021 Axopar Boats

13 Appendix V: Transport dimensions

© 2026 Axopar Boats / Brabus Marine

AXOPAR 45 SUN TOP

SIDE VIEW

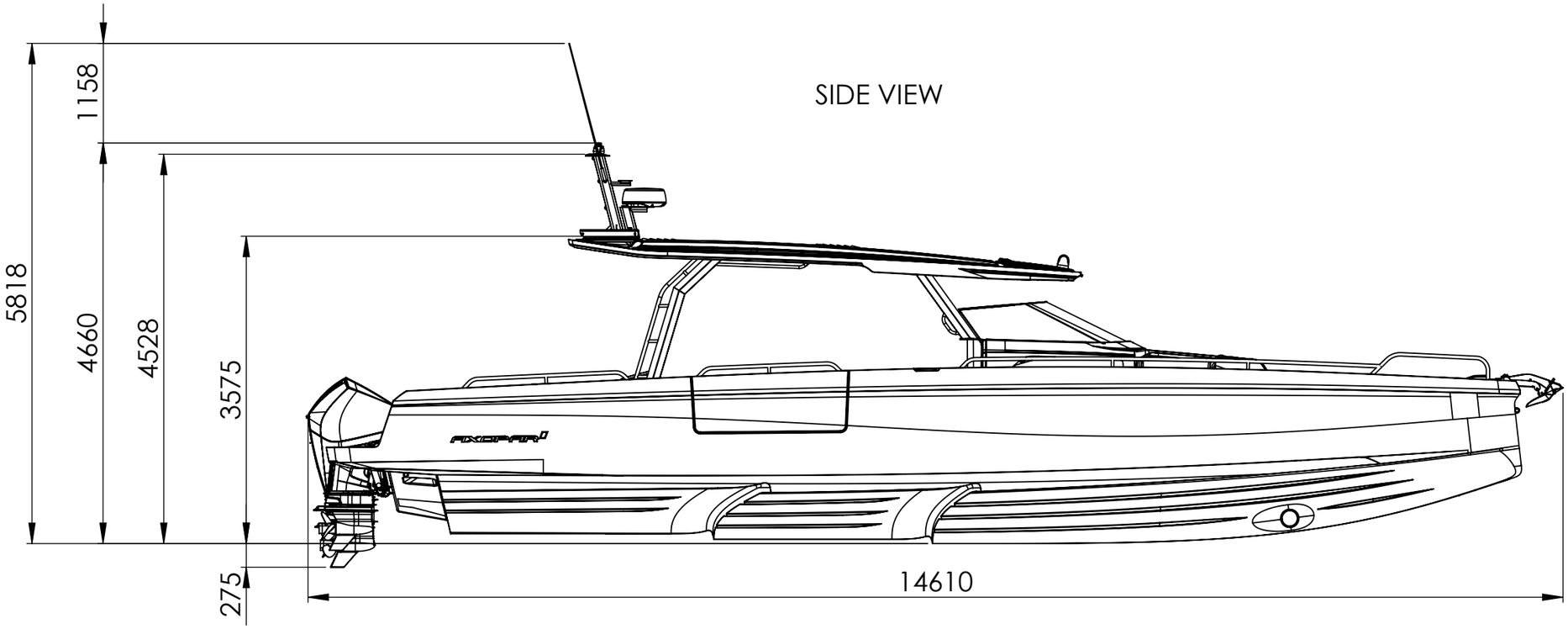

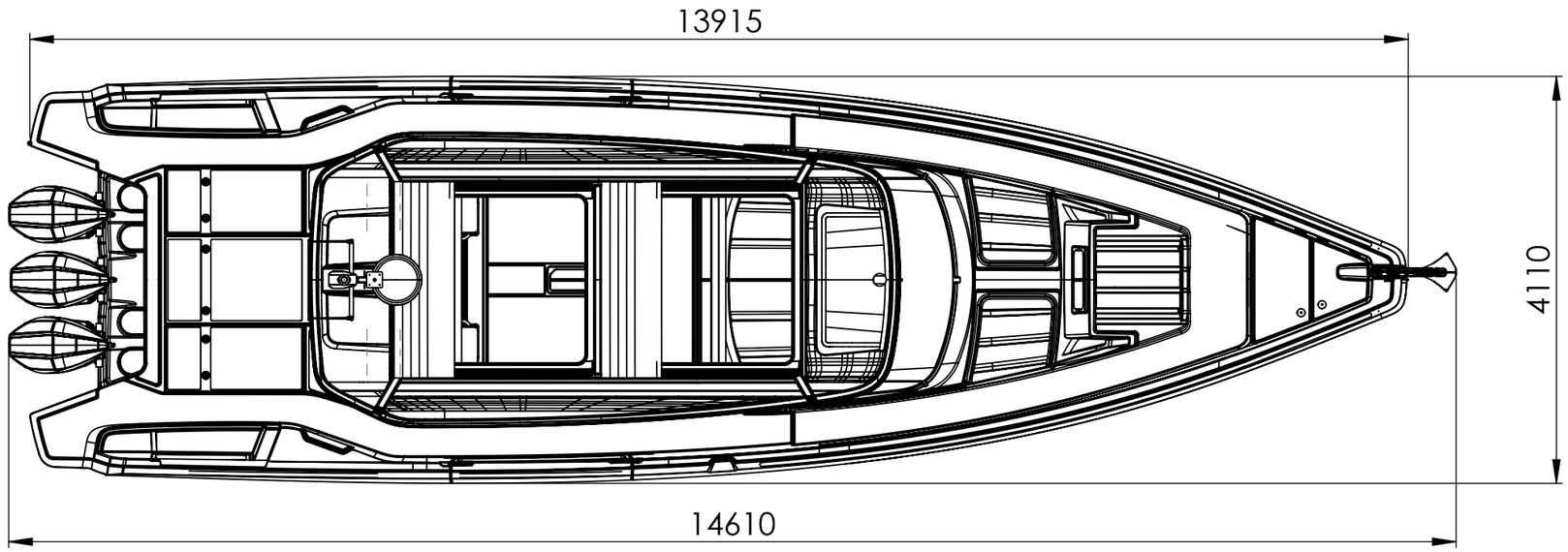

TOP VIEW

AXOPAR 45 SUN TOP

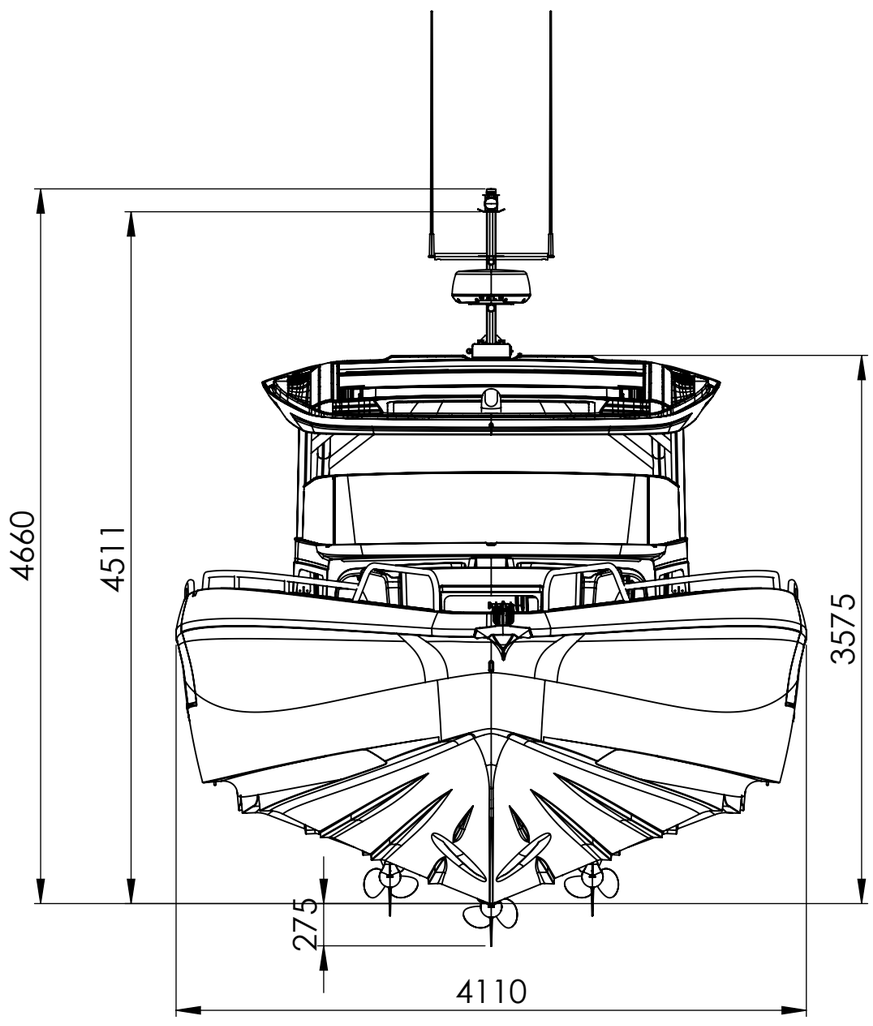

FRONT VIEW

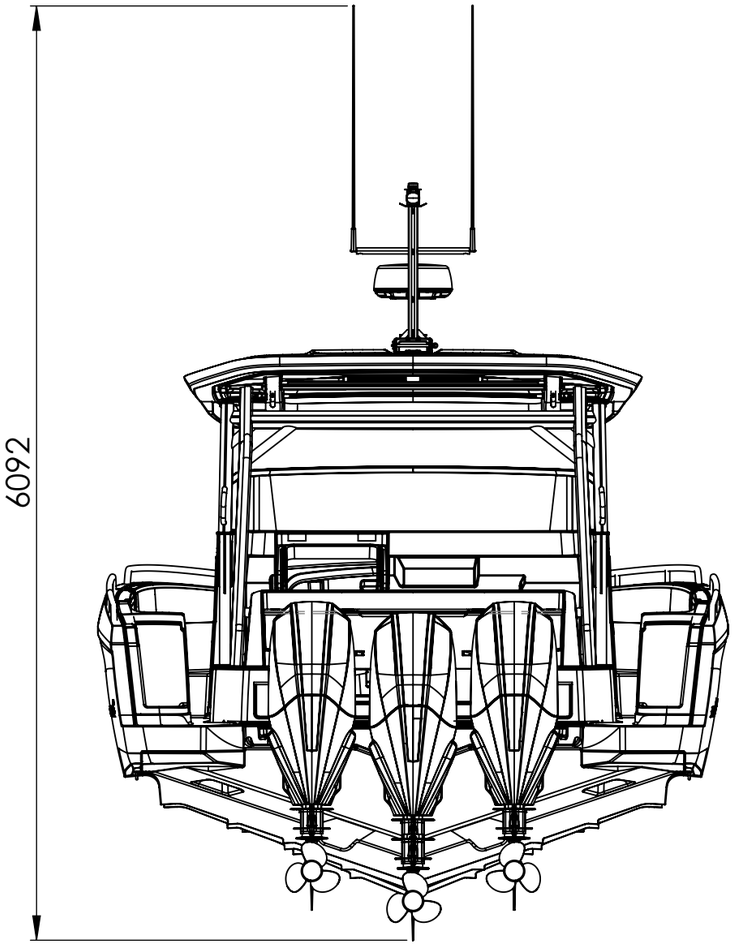

BACK VIEW

AXOPAR 45 RANGE - TRANSPORT CRADLE

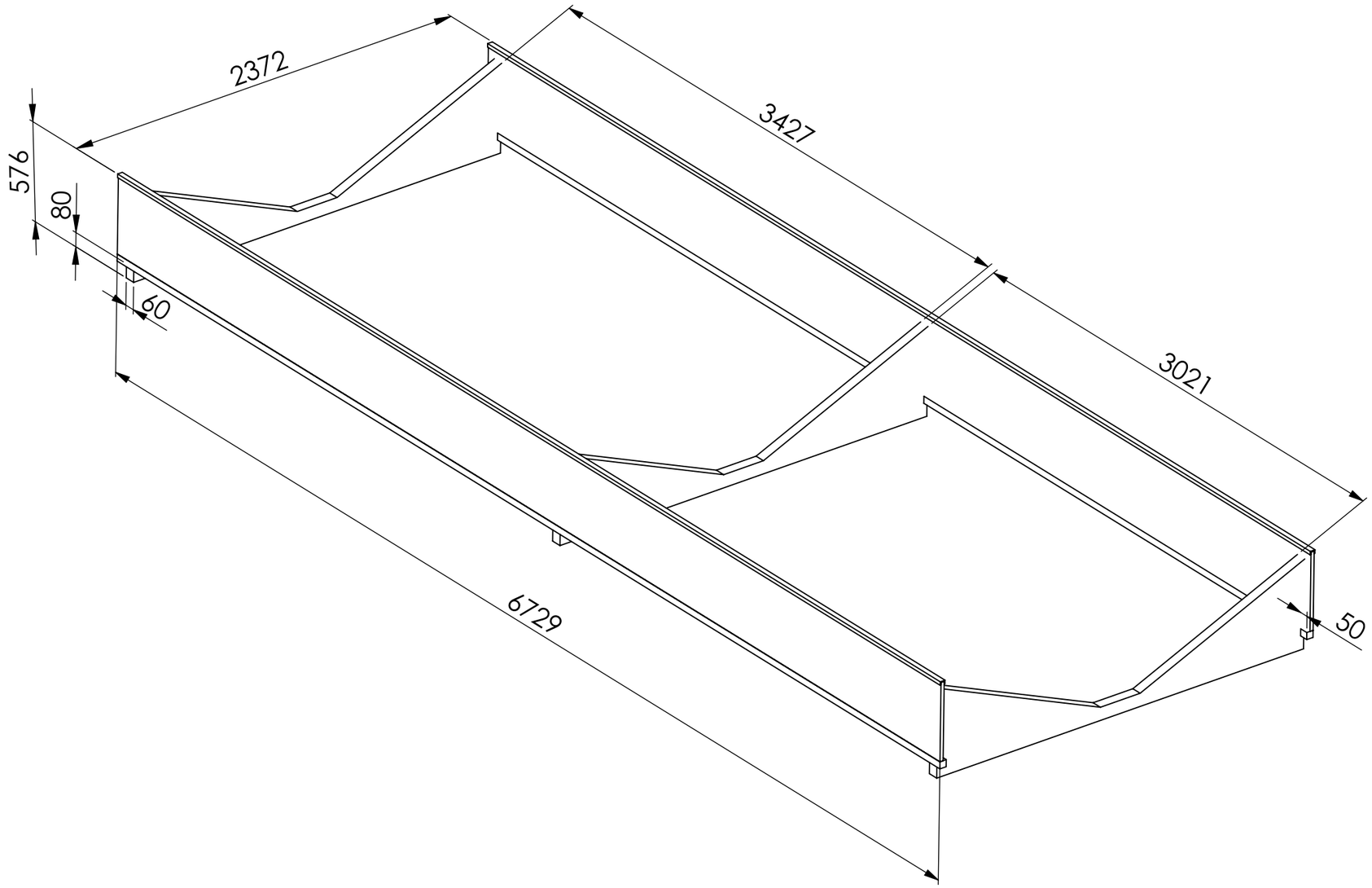

AXOPAR 45 RANGE - STRAPPING

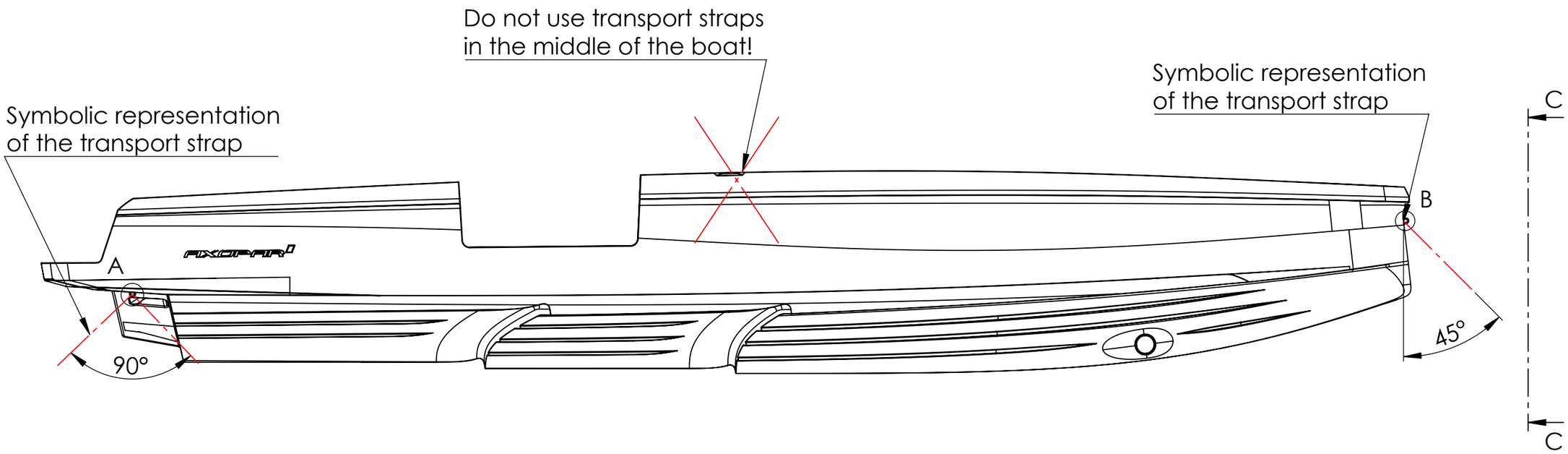

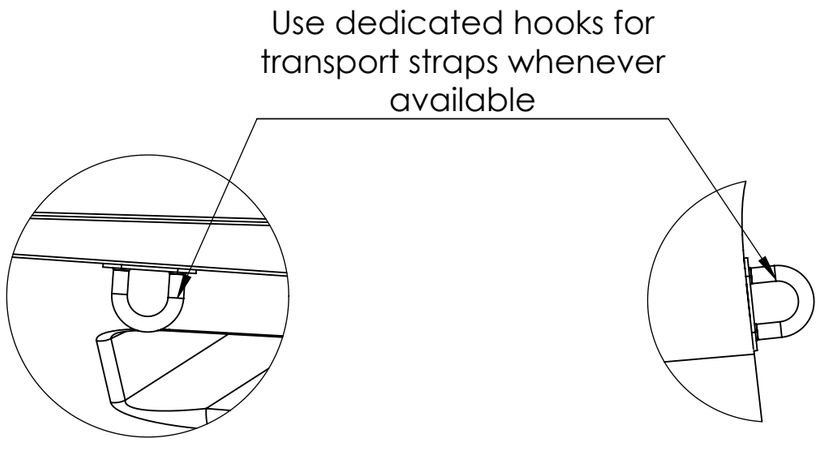

DETAIL A
SCALE 1 : 5

DETAIL B
SCALE 1 : 5

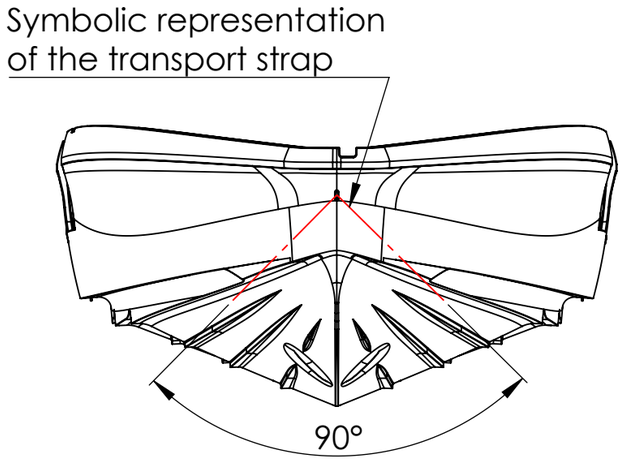

SECTION C-C

NOTE:
- For transporting and securing the boat, use transport straps only in the indicated places (aft and bow side).

AXOPAR 45 CROSS TOP

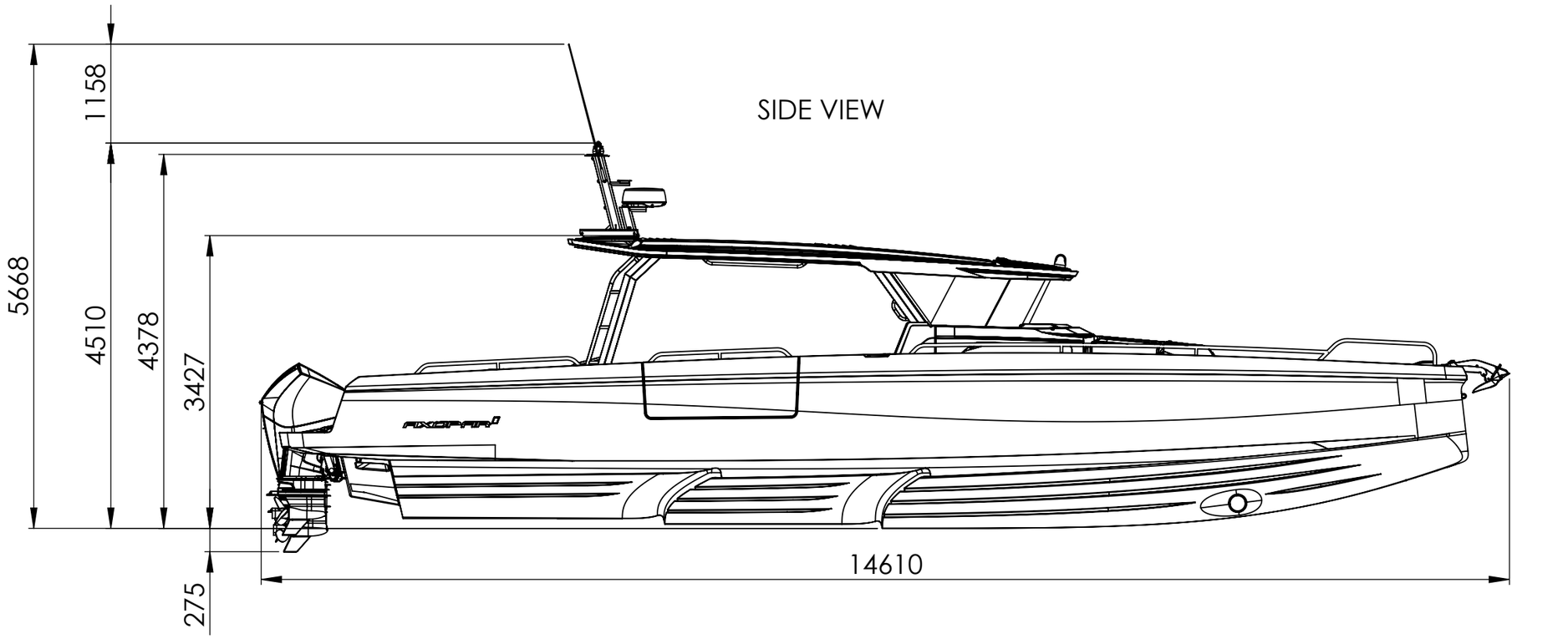

SIDE VIEW

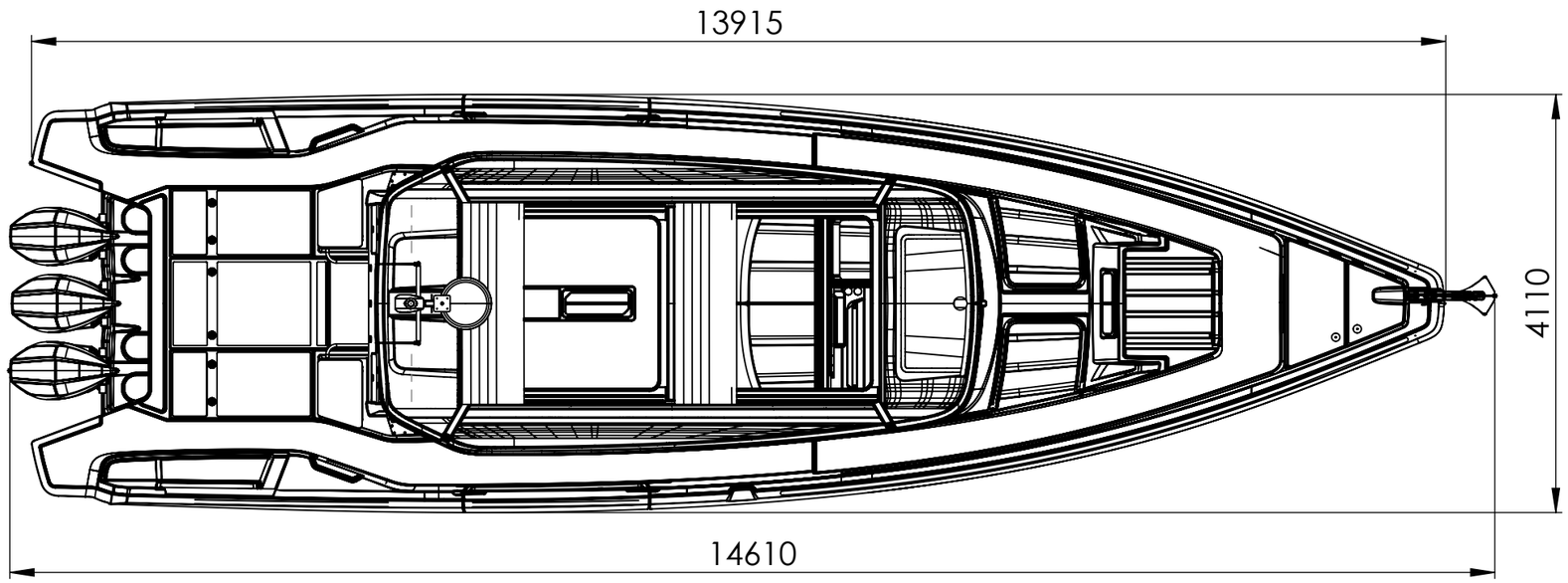

TOP VIEW

AXOPAR 45 CROSS TOP

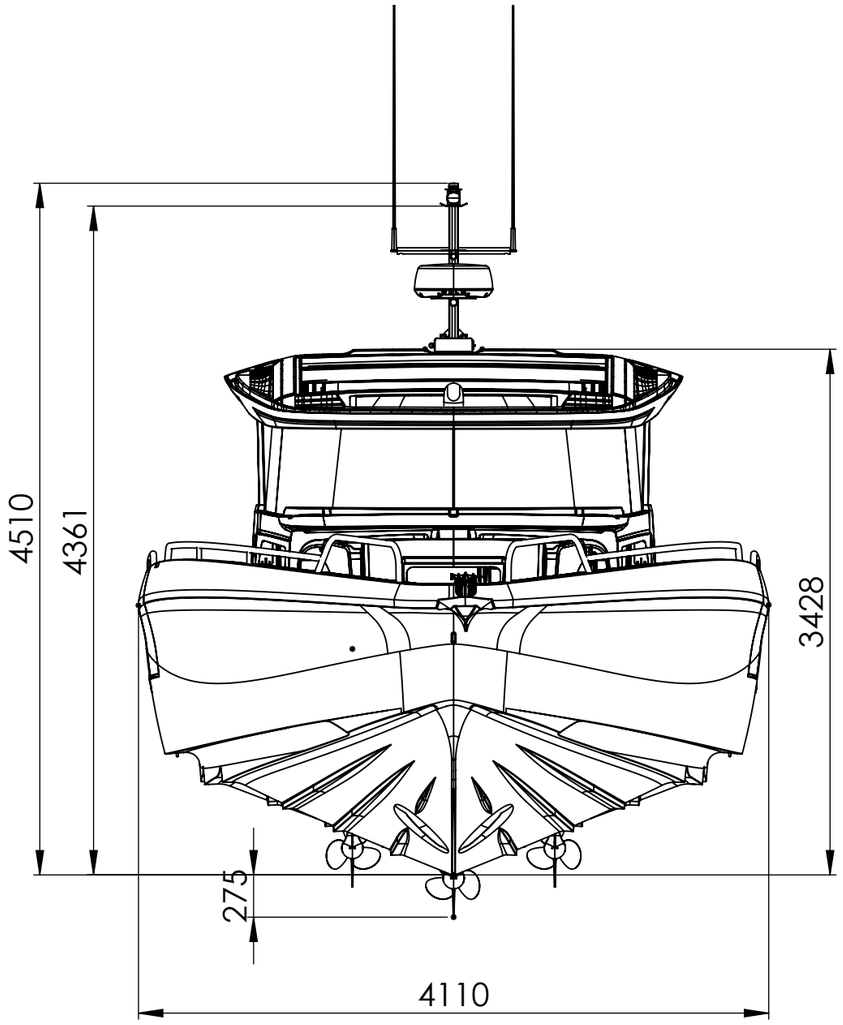

FRONT VIEW

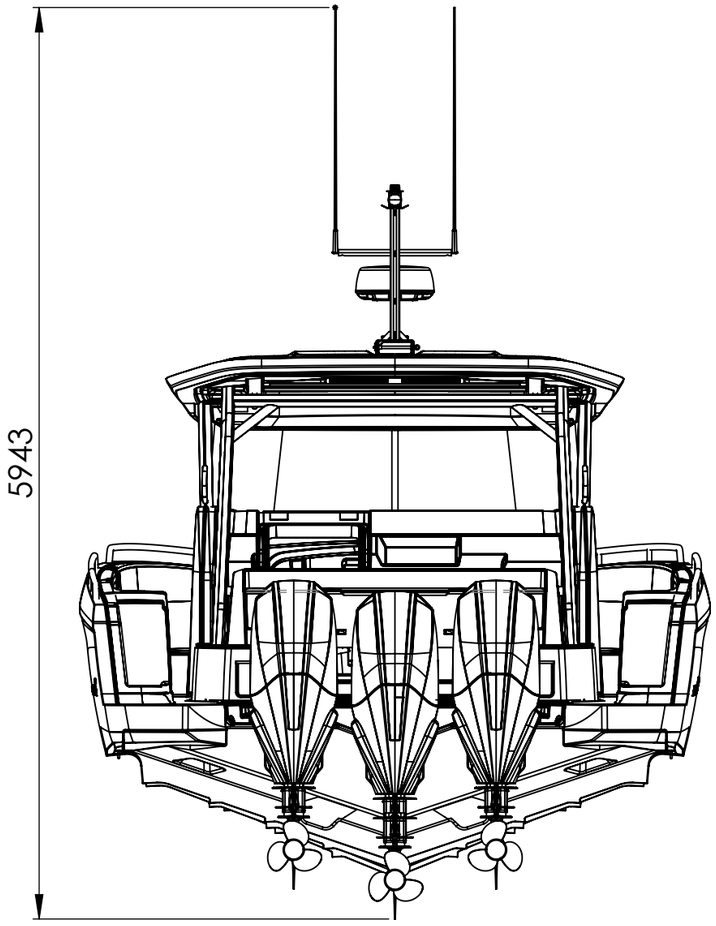

BACK VIEW

AXOPAR 45 RANGE - TRANSPORT CRADLE

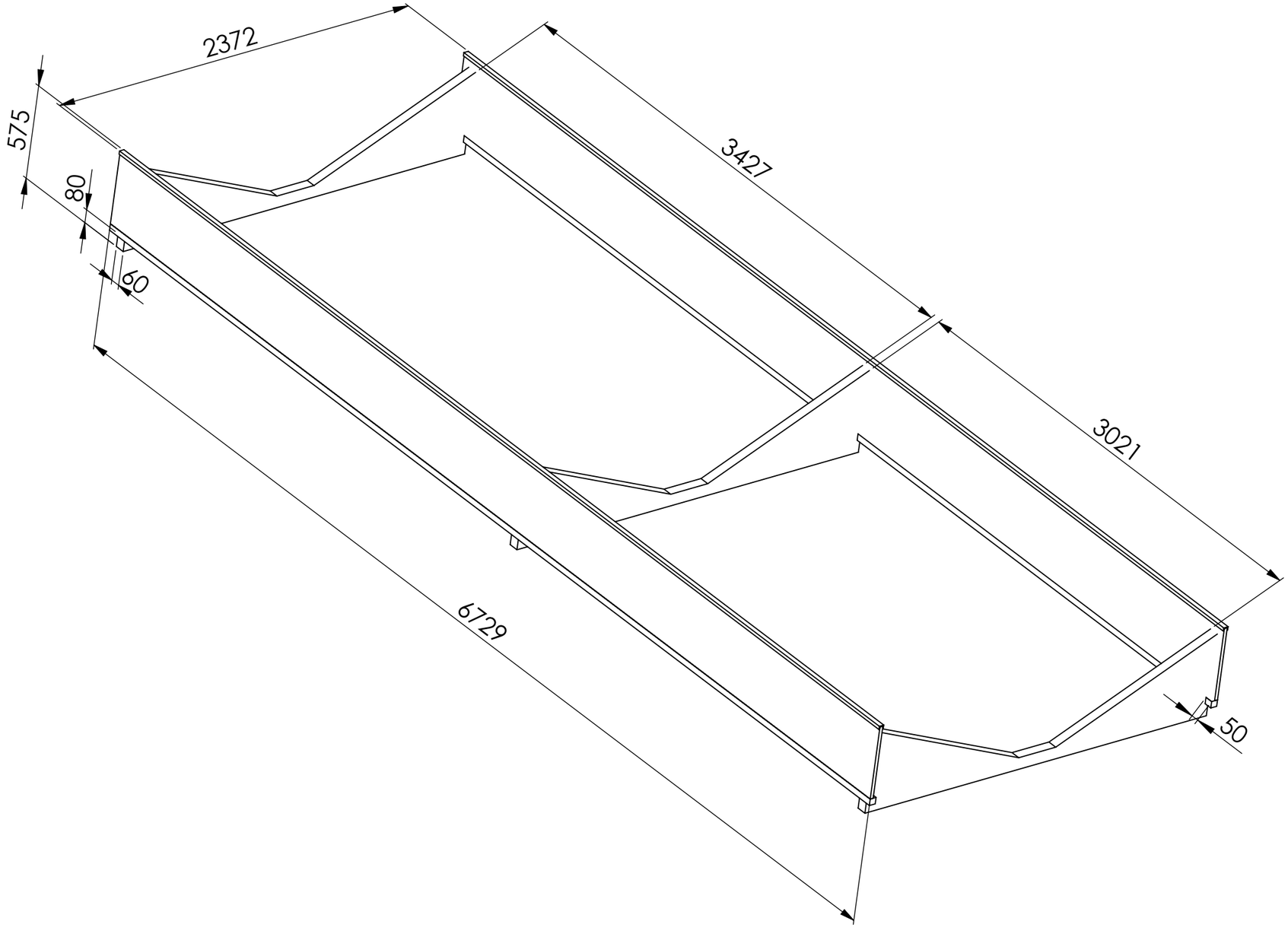

AXOPAR 45 RANGE - STRAPPING

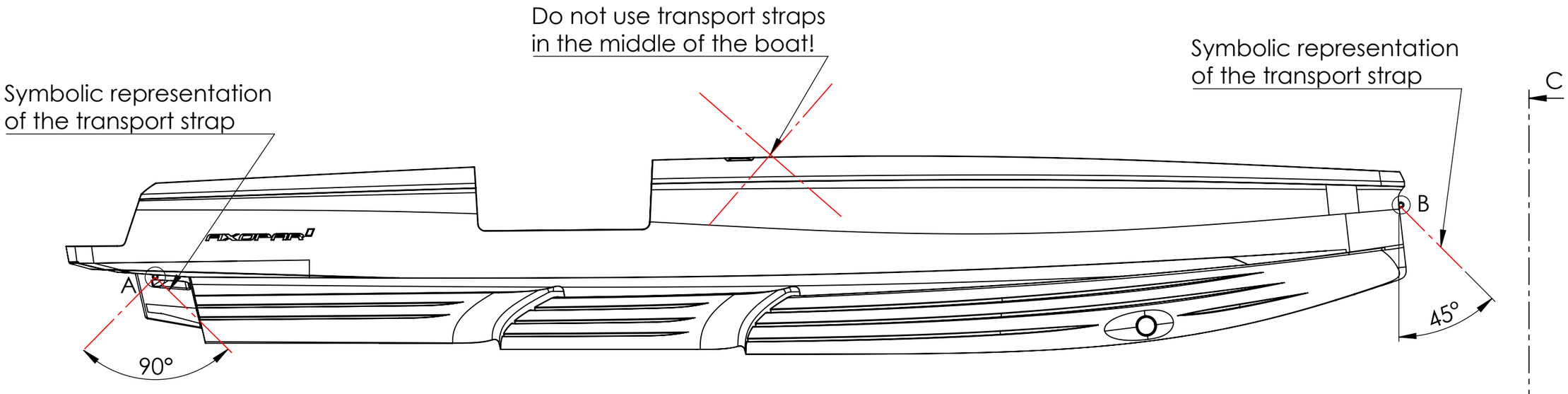



DETAIL A
SCALE 1 : 5

DETAIL B
SCALE 1 : 5

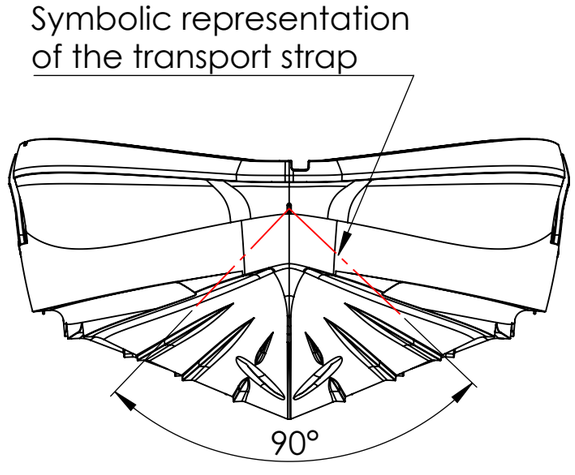

SECTION C-C

NOTE:
- For transporting and securing the boat, use transport straps only in the indicated places (aft and bow).

14 Appendix VI: Warranty terms

© 2026 Axopar Boats / Brabus Marine

14.1 Warranty terms: US

© 2026 Axopar Boats / Brabus Marine

AXOPAR

Limited Warranty for Axopar Boats

US version 1.0

IMPORTANT NOTICE: THIS LIMITED WARRANTY IS SUBJECT TO BINDING ARBITRATION AND A WAIVER OF CLASS ACTIONS, AS DESCRIBED IN SECTION 7. Please also read the limitations and disclaimers in Sections 3(D), 3(E) and 6 regarding Boats.

Limited Warranty

Axopar Boats Ltd ("*Axopar*") warrants to the original retail purchaser ("*Purchaser*") of an Axopar boat manufactured and equipped with a hull identification number by Axopar ("*Boat*") and sold at retail by an authorized dealer ("*Dealer*") that Axopar will repair or replace defective materials and workmanship found during the applicable warranty period, subject to the limitations, exclusions and other conditions provided below. The decision to repair or replace will be made by Axopar in its sole discretion, and all repairs must occur at the location specified by Axopar (the "*Service Location*"). This Limited Warranty gives the Purchaser specific legal rights and Purchaser may have other legal rights, which vary from state to state.

1. Applicability

This Limited Warranty is valid worldwide during the applicable warranty period and applies only to Boats purchased by consumers and operated under normal, non-commercial use in compliance with the relevant owner's manual. Any warranty for Boats intended for commercial use must be separately agreed upon in writing between Axopar and the Purchaser.

The Limited Warranty also covers any equipment installed in the Boat by Axopar as an integral part of the delivery but excludes (i) equipment covered by a separate warranty, as further specified below in Sections 2 (Warranty Provider) and 3 (Warranty Period and Limitations) and (ii) any items installed by the Dealer in the Boat or included by the Dealer with the Boat. Equipment acquired by the Purchaser from third parties and which are not included in the original delivery are not covered under this Limited Warranty.

The hull identification number of the Boat and other particulars relevant to this Limited Warranty are recorded in the applicable sales contract and/or in the Boat's warranty certificate.

2. Warranty Provider

This Limited Warranty is provided solely by Axopar. Contact details are shown in the warranty certificate provided to the Purchaser upon delivery of the Boat. All warranties provided by the manufacturers and distributors of components, equipment and parts of the Boat are hereby assigned to the Purchaser to the extent permitted by the applicable manufacturers and distributors, as Purchaser's sole and exclusive remedy with respect to those items.

3. Warranty Period and Limitations

The Limited Warranty is valid from the delivery date of the Boat to the Purchaser, as reflected in the Boat's warranty certificate (the "*Delivery Date*"), for the time periods identified below.

(A) ***Five-Year Limited Warranty on Structural Hull:***

Axopar will repair or replace any substantial defect in material or workmanship in the Boat's structural hull that is reported within five years from the Delivery Date. The structural hull means the fiberglass molded shell and all its integral structural components. A defect is substantial if it causes the Boat to be unfit or unsafe for general use as a pleasure craft under normal operating conditions.

(B) ***Two-Year Limited Warranty on Components Manufactured or Installed by Axopar:***

Axopar will repair or replace any components manufactured or installed by Axopar that are defective in factory materials or workmanship and are reported within two years from the Delivery Date (and are not already addressed in the specific warranties provided in paragraphs (A) and (C)).

(C) ***One-Year Limited Warranty on Upholstered Items, Canvas, Floor Materials, Other Coating and Painted Parts:***

Axopar will repair or replace any upholstered items, canvas, floor materials, other coating, and painted parts manufactured or installed by Axopar that are defective in factory materials or workmanship and are reported within one year from the Delivery Date.

(D) ***Exclusions***

The Limited Warranty does not apply to or cover the following items: (1) any costs incurred from hauling or transporting the Boat to and from the Service Location; (2) any equipment, parts or accessories not installed by Axopar or that carry their own individual warranties provided by third parties, including but not limited to engines, propellers, pre-rigging equipment, batteries, generators, A/C units, steering mechanisms and other electronic equipment; (3) minor changes to the Boat's external surfaces that have no influence on the strength or serviceability of the Boat, including but not limited to any damage, deterioration, fading or discoloration or mold of cushions, cracking, fading or oxidation of gel coat, stress lines, anti-fouling bottom paint or other slight irregularities in paint work, lacquer work, woodwork or chrome finish or other minor surface blemishes; (4) windshield damage or leakage; (5) any damage resulting from Purchaser's or a third party's negligence, willful misconduct, improper use of the Boat, overloading, powering in excess of the recommended maximum horsepower, improper rigging, misuse or alterations or repairs or attempted repairs on the Boat not authorized by Axopar, including use of an improper trailer, Boat lift or sling; (6) failure of the Purchaser or any third party to use, maintain or store the Boat as specified in the owner's manual, or any other failure to provide reasonable care and maintenance; (7) normal wear and tear items, including but not limited to ropes, filters, bulbs and batteries; (8) any representation or implication of the Boat's properties or characteristics, such as speed, weight, range, performance or fuel consumption; (9) any failure or defect not reported to Axopar or Dealer in accordance with Section 4 (Warranty Procedures) of this Limited Warranty; (10) any failure or defect arising from repairs made by unauthorized service providers; (11) any failure or defect arising from acts of nature; and (12) any Boat that was previously salvaged or declared a total loss or constructive loss for any reason.

(E) ***Voiding the Limited Warranty***

This warranty becomes void if: (1) Purchaser sells or otherwise conveys the Boat to a third party during the warranty period and Axopar is not provided with the bill of sale of the Boat and/or the contact information of the new owner; (2) Purchaser uses the Boat in other than non-commercial activities; (3) the Boat is used in a competitive event; (4) any unauthorized modifications or changes are made to the Boat (e.g. structural modification or modifications to electrical systems on board or the programming of its engine or other systems); or (5) the Boat is salvaged or declared a total loss or constructive loss for any reason.

4. Warranty Procedures

To obtain warranty service, Purchaser must notify the Dealer about the failure or defect within a reasonable time after becoming aware of it or after Purchaser should have become aware of it. Upon detecting a defect, the Purchaser is required to take all reasonable steps necessary to prevent the defect from deteriorating further. When reporting any defect, the Purchaser must provide the Boat's hull identification number, a copy of the warranty certificate, a reasonable number of clear and detailed photos of the defect, and a supported or documented explanation regarding when the Boat was purchased and the Dealer from which it was purchased.

After providing notice of the defect to the Dealer, the Dealer will notify Purchaser of the procedures to follow regarding this Limited Warranty. Dealer will then notify Axopar, and upon being notified of the warranty claim by Dealer, Axopar is solely responsible for determining and authorizing in writing the remedial action to be performed.

5. Axopar's Warranty Responsibilities

Axopar has always the right to repair a defect covered by this Limited Warranty if, in view of the nature and extent of the defect, it can be done within a reasonable time and in such a way that it does not result in repair costs or material detriment to the Purchaser. All repairs shall be carried out in a way and at the Service Location designated by Axopar.

If Axopar determines that repair is not possible, Purchaser has the right to a discount proportionate to the defect. Alternatively, Axopar may, in its sole discretion, offer to Purchaser a replacement Boat with a market value equal to the replaced Boat's market value (considering the Boat's age and condition) if it did not have that specific unrepairable defect.

If Axopar reasonably determines that the Boat defect is not covered by the Limited Warranty, Axopar has the right to charge the Purchaser for any costs that arise from inspecting and determining the defect and its cause. Any repair costs and expenses are subject mutual agreement by Axopar and the Purchaser.

6. Sole Remedy and Other Limitations

The repair, discount and replacement obligations specified in Section 5 (Axopar's Warranty Responsibilities) for parts or materials covered by this Limited Warranty are Purchaser's sole and exclusive remedy, and Axopar's sole obligations, for any claims whatsoever or any losses resulting from product failure.

This Limited Warranty the final, complete and exclusive warranty offered by Axopar regarding the Boat, and no other person or entity (including the Dealer or their respective sales agents or employees) is authorized to make any other warranties or representations on behalf of Axopar. **EXCEPT FOR THE EXPRESS LIMITED WARRANTIES PROVIDED IN THIS LIMITED WARRANTY, AXOPAR DISCLAIMS ALL OTHER EXPRESS AND IMPLIED WARRANTIES AND REPRESENTATIONS OF ANY KIND, INCLUDING ANY IMPLIED WARRANTY OF MERCHANTABILITY, AND FITNESS FOR A PARTICULAR PURPOSE. EXCEPT AS OTHERWISE PROVIDED IN THIS LIMITED WARRANTY, ALL BOATS ARE PROVIDED "AS IS" AND "WITH ALL FAULTS".** If and to the extent that an implied warranty cannot be disclaimed, that warranty is limited to duration of the respective express Limited Warranty provided herein. Some states do not allow the exclusion of implied warranties or do not allow limitations on the amount of time an implied warranty lasts, so the above limitations may not apply to some Purchasers.

To the extent permitted by applicable law, Axopar disclaims all liability to Purchaser and third parties for any economic loss arising from claims of product failure, negligence, defective design, lack of seaworthiness, manufacturing defect and any other liability not expressly covered in this Limited Warranty. **TO THE EXTENT PERMITTED BY APPLICABLE LAW, NEITHER AXOPAR NOR DEALER SHALL UNDER ANY CIRCUMSTANCES BE LIABLE FOR ANY INDIRECT, CONSEQUENTIAL, SPECIAL, ENHANCED, OR PUNITIVE DAMAGES, INCLUDING LOSS OF THE BOAT, PROFIT, PRODUCTIVITY, BUSINESS, CONTRACTS, REVENUES OR ANTICIPATED SAVINGS, OR INCREASED COSTS OR EXPENSES, AND IN NO EVENT SHALL AXOPAR'S LIABILITY EXCEED THE ACTUAL AMOUNT PAID BY PURCHASER FOR THE BOAT.** Some states do not allow the exclusion or limitation of incidental or consequential damages, so the above limitation or exclusion may not apply to every Purchaser.

If, at any time, any provision of this Limited Warranty is or becomes illegal, invalid or unenforceable in any respect under the laws of any jurisdiction, the legality, validity or enforceability of the remaining provisions will remain unaffected.

7. Arbitration and Limitation on Actions

PLEASE READ THIS SECTION CAREFULLY. WE WANT YOU TO KNOW HOW IT AFFECTS YOUR RIGHTS.

(A) *Customer Service and FAQs*

In the unlikely event that an issue, concern or claim (including legal claims) remains unresolved after the procedure specified in Section 4 (Warranty Procedures) and the issue has been escalated to Axopar, Purchaser and Axopar each agree to discuss any issue informally for at least 30 days. Purchaser can do this by sending your full name and contact information, your concern and your requested solution to Axopar at warranty@axopar.fi, Attn: Legal Department. If Axopar would like to discuss an issue with Purchaser, Axopar will contact you at the address provided to the Dealer.

(B) *Agreement to Arbitrate*

If an agreed solution is not reached at the end of the 30-day discussion period, Purchaser and Axopar each agree that any issue, concern or claim (including legal claims) that either may have arising out of or relating to this Limited Warranty must be resolved through final binding arbitration before the American Arbitration Association using its Consumer Arbitration Rules, available at https://www.adr.org/sites/default/files/Consumer%20Rules.pdf (the "*AAA Rules*") or available by calling the American Arbitration

Association at 1-800-778-7879. As an exception to this agreement to arbitrate, Axopar gives you the right to pursue in small claims court any claim that is within that court's jurisdiction, so long as you proceed solely on an individual basis. A party who intends to seek arbitration must first send to the other party, by certified or registered mail, a written notice of dispute. Purchaser may download or copy a form notice of dispute and a form to initiate arbitration from www.adr.org. Unless Purchaser and Axopar agree otherwise, the arbitration hearings will take place in a reasonably convenient location for both parties as determined by the arbitrator in accordance with the AAA Rules, and the hearings may be conducted in-person, by videoconference, phone or by the exchange of documents. The arbitrator's decision will be binding and may be enforced and entered as a judgment in any court of competent jurisdiction. If the arbitrator rules against Axopar, Axopar will reimburse Purchaser for reasonable attorneys' fees and costs, regardless of who initiated the arbitration. However, if the arbitrator rules in Axopar's favor, Axopar will not seek reimbursement of attorneys' fees and costs, regardless of who initiated the arbitration.

(C) *Time Limitation; No Class Actions*

To help resolve any issues between us promptly and directly, Axopar and Purchaser agree to begin any arbitration under this Limited Warranty within one year after the claim first arose; otherwise, the claim is waived. Axopar and Purchaser also agree to arbitrate in each of our individual capacities only – not as a representative or member of a class – and each of us expressly waives any right to file a class action or seek relief on a class action basis. Furthermore, unless Purchaser and Axopar agree in writing, the arbitrator may not consolidate more than one person's claims and may not otherwise preside over any form of a representative of class proceeding.

(D) *Confidentiality*

All arbitration proceedings are confidential, unless both Purchaser and Axopar agree otherwise. Arbitration orders and awards required to be filed with applicable courts of competent jurisdiction are not confidential and may be disclosed by the parties to such courts. A party who improperly discloses confidential information will be subject to sanctions. The arbitrator and forum may disclose case filings, case dispositions, and other case information as required by a court order of proper jurisdiction.

14.2 Warranty terms: non-US

© 2026 Axopar Boats / Brabus Marine

AXOPAR

Limited Warranty for Axopar Boats

Non-US version 1.0

Limited Warranty

Axopar Boats Ltd ("*Axopar*") warrants to the original retail purchaser ("*Purchaser*") of an Axopar boat manufactured and equipped with a hull identification number by Axopar ("*Boat*") and sold at retail by an authorized dealer ("*Dealer*") that Axopar will repair or replace defective materials and workmanship found during the applicable warranty period, subject to the limitations, exclusions and other conditions provided below. The decision to repair or replace will be made by Axopar in its sole discretion, and all repairs must occur at the location specified by Axopar (the "*Service Location*"). This Limited Warranty gives the Purchaser specific legal rights and Purchaser may have other legal rights, which vary from country to country.

1. Applicability

This Limited Warranty is valid worldwide during the applicable warranty period and applies only to Boats purchased by consumers and operated under normal, non-commercial use in compliance with the relevant Axopar owner's manual. Any warranty for Boats intended for commercial use must be separately agreed upon in writing between Axopar and the Purchaser.

The Limited Warranty also covers any equipment installed in the Boat by Axopar as an integral part of the delivery but excludes (i) equipment covered by a separate warranty, as further specified below in Sections 2 (Warranty Provider) and 3 (Warranty Period and Limitations) and (ii) any items installed by the Dealer in the Boat or included by the Dealer with the Boat. Equipment acquired by the Purchaser from third parties and which are not included in the original delivery are not covered under this Limited Warranty.

The hull identification number of the Boat and other particulars relevant to this Limited Warranty are recorded in the applicable sales contract and/or in the Boat's warranty certificate.

2. Warranty Provider

This Limited Warranty is provided solely by Axopar. Contact details are shown in the warranty certificate provided to the Purchaser upon delivery of the Boat. All warranties provided by the manufacturers and distributors of components, equipment and parts of the Boat are hereby assigned to the Purchaser to the extent permitted by the applicable manufacturers and distributors, as Purchaser's sole and exclusive remedy with respect to those items.

3. Warranty Period and Limitations

The Limited Warranty is valid from the delivery date of the Boat to the Purchaser, as reflected in the Boat's warranty certificate (the "*Delivery Date*"), for the time periods identified below.

(A) ***Five-Year Limited Warranty on Structural Hull:***

Axopar will repair or replace any substantial defect in material or workmanship in the Boat's structural hull that is reported within five years from the Delivery Date. The structural hull means the fiberglass molded shell and all its integral structural components. A defect is substantial if it causes the Boat to be unfit or unsafe for general use as a pleasure craft under normal operating conditions.

(B) ***Two-Year Limited Warranty on Components Manufactured or Installed by Axopar:***

Axopar will repair or replace any components manufactured or installed by Axopar that are defective in factory materials or workmanship and are reported within two years from the Delivery Date (and are not already addressed in the specific warranties provided in paragraphs (A) and (C)).

(C) ***One-Year Limited Warranty on Upholstered Items, Canvas, Floor Materials, Other Coating and Painted Parts:***

Axopar will repair or replace any upholstered items, canvas, floor materials, other coating, and painted parts manufactured or installed by Axopar that are defective in factory materials or workmanship and are reported within one year from the Delivery Date.

(D) ***Exclusions***

The Limited Warranty does not apply to or cover the following items: (1) any costs incurred from hauling or transporting the Boat to and from the Service Location; (2) any equipment, parts or accessories not installed by Axopar or that carry their own individual warranties provided by third parties, including but not limited to engines, propellers, pre-rigging equipment, batteries, generators, A/C units, steering mechanisms and other electronic equipment; (3) minor changes to the Boat's external surfaces that have no influence on the strength or serviceability of the Boat, including but not limited to any damage, deterioration, fading or discoloration or mold of cushions, cracking, fading or oxidation of gel coat, stress lines, anti-fouling bottom paint or other slight irregularities in paint work, lacquer work, woodwork or chrome finish or other minor surface blemishes; (4) windshield damage or leakage; (5) any damage resulting from Purchaser's or a third party's negligence, willful misconduct, improper use of the Boat, overloading, powering in excess of the recommended maximum horsepower, improper rigging, misuse or alterations or repairs or attempted repairs on the Boat not authorized by Axopar, including use of an improper trailer, Boat lift or sling; (6) failure of the Purchaser or any third party to use, maintain or store the Boat as specified in the owner's manual, or any other failure to provide reasonable care and maintenance; (7) normal wear and tear items, including but not limited to ropes, filters, bulbs and batteries; (8) any representation or implication of the Boat's properties or characteristics, such as speed, weight, range, performance or fuel consumption; (9) any failure or defect not reported to Axopar or Dealer in accordance with Section 4 (Warranty Procedures) of this Limited Warranty; (10) any failure or defect arising from repairs made by unauthorized service providers; (11) any failure or defect arising from acts of nature; and (12) any Boat that was previously salvaged or declared a total loss or constructive loss for any reason.

(E) ***Voiding the Limited Warranty***

This warranty becomes void if: (1) Purchaser sells or otherwise conveys the Boat to a third party during the warranty period and Axopar is not provided with the bill of sale of the Boat

and/or the contact information of the new owner; (2) Purchaser uses the Boat in other than non-commercial activities; (3) the Boat is used in a competitive event; (4) any unauthorized modifications or changes are made to the Boat (e.g. structural modification or modifications to electrical systems on board or the programming of its engine or other systems); or (5) the Boat is salvaged or declared a total loss or constructive loss for any reason.

4. Warranty Procedures

To obtain warranty service, Purchaser must notify the Dealer about the failure or defect within a reasonable time after becoming aware of it or after Purchaser should have become aware of it. Upon detecting a defect, the Purchaser is required to take all reasonable steps necessary to prevent the defect from deteriorating further. When reporting any defect, the Purchaser must provide the Boat's hull identification number, a copy of the warranty certificate, a reasonable number of clear and detailed photos of the defect, and a supported or documented explanation regarding when the Boat was purchased and the Dealer from which it was purchased.

After providing notice of the defect to the Dealer, the Dealer will notify Purchaser of the procedures to follow regarding this Limited Warranty. Dealer will then notify Axopar, and upon being notified of the warranty claim by Dealer, Axopar is solely responsible for determining and authorizing in writing the remedial action to be performed.

5. Axopar's Warranty Responsibilities

Axopar has always the right to repair a defect covered by this Limited Warranty if, in view of the nature and extent of the defect, it can be done within a reasonable time and in such a way that it does not result in repair costs or material detriment to the Purchaser. All repairs shall be carried out in a way and at the Service Location designated by Axopar.

If Axopar determines that repair is not possible, Purchaser has the right to a discount proportionate to the defect. Alternatively, Axopar may, in its sole discretion, offer to Purchaser a replacement Boat with a market value equal to the replaced Boat's market value (considering the Boat's age and condition) if it did not have that specific unrepairable defect.

If Axopar reasonably determines that the Boat defect is not covered by the Limited Warranty, Axopar has the right to charge the Purchaser for any costs that arise from inspecting and determining the defect and its cause. Any repair costs and expenses are subject mutual agreement by Axopar and the Purchaser.

6. Sole Remedy and Other Limitations

The repair, discount and replacement obligations specified in Section 5 (Axopar's Warranty Responsibilities) for parts or materials covered by this Limited Warranty are Purchaser's sole and exclusive remedy, and Axopar's sole obligations, for any claims whatsoever or any losses resulting from product failure.

This Limited Warranty the final, complete and exclusive warranty offered by Axopar regarding the Boat, and no other person or entity (including the Dealer or its respective sales agents or employees) is authorized to make any other warranties or representations on behalf of Axopar. **EXCEPT FOR THE EXPRESS LIMITED WARRANTIES PROVIDED IN THIS LIMITED WARRANTY, AXOPAR DISCLAIMS ALL OTHER EXPRESS AND IMPLIED WARRANTIES AND REPRESENTATIONS OF ANY KIND, INCLUDING ANY IMPLIED WARRANTY OF MERCHANTABILITY, AND FITNESS FOR A PARTICULAR PURPOSE. EXCEPT AS OTHERWISE PROVIDED IN THIS LIMITED WARRANTY, ALL BOATS ARE PROVIDED "AS IS" AND "WITH ALL FAULTS".** If and to the extent that an implied warranty cannot be disclaimed, that warranty is limited to duration of the respective express Limited Warranty provided herein. Some countries do not allow the exclusion of implied warranties or do not allow limitations on the amount of time an implied warranty lasts, so the above limitations may not apply to some Purchasers.

To the extent permitted by applicable law, Axopar disclaims all liability to Purchaser and third parties for any economic loss arising from claims of product failure, negligence, defective design, lack of seaworthiness, manufacturing defect and any other liability not expressly covered in this Limited Warranty. **TO THE EXTENT PERMITTED BY APPLICABLE LAW, NEITHER AXOPAR NOR DEALER SHALL UNDER ANY CIRCUMSTANCES BE LIABLE FOR ANY INDIRECT, CONSEQUENTIAL, SPECIAL, ENHANCED, OR PUNITIVE DAMAGES, INCLUDING LOSS OF THE BOAT, PROFIT, PRODUCTIVITY, BUSINESS, CONTRACTS, REVENUES OR ANTICIPATED SAVINGS, OR INCREASED COSTS OR EXPENSES, AND IN NO EVENT SHALL AXOPAR'S LIABILITY EXCEED THE ACTUAL AMOUNT PAID BY PURCHASER FOR THE BOAT.** Some countries do not allow the exclusion or limitation of incidental or consequential damages, so the above limitation or exclusion may not apply to every Purchaser.

If, at any time, any provision of this Limited Warranty is or becomes illegal, invalid or unenforceable in any respect under the laws of any jurisdiction, the legality, validity or enforceability of the remaining provisions will remain unaffected.

7. Arbitration and Limitation on Actions

PLEASE READ THIS SECTION CAREFULLY. WE WANT YOU TO KNOW HOW IT AFFECTS YOUR RIGHTS.

(A) *Customer Service and FAQs*

In the unlikely event that an issue, concern or claim (including legal claims) remains unresolved after the procedure specified in Section 4 (Warranty Procedures) and the issue has been escalated to Axopar, Purchaser and Axopar each agree to discuss any issue informally for at least 30 days. Purchaser can do this by sending your full name and contact information, your concern and your requested solution to Axopar at warranty@axopar.fi, Attn: Legal Department. If Axopar would like to discuss an issue with Purchaser, Axopar will contact you at the address provided to the Dealer.

(B) *Agreement to Arbitrate*

If an agreed solution is not reached at the end of the 30-day discussion period, Purchaser and Axopar each agree that any issue, concern or claim (including legal claims) that either may have arising out of or relating to this Limited Warranty must be resolved through final binding arbitration. The arbitrator's decision will be binding and may be enforced and entered as a judgment in any court of competent jurisdiction. If the arbitrator rules against Axopar, Axopar will reimburse Purchaser for reasonable attorneys' fees and costs, regardless of who initiated the arbitration. However, if the arbitrator rules in Axopar's favor, Axopar will not seek reimbursement of attorneys' fees and costs, regardless of who initiated the arbitration.

(C) *Time Limitation; No Class Actions*

To help resolve any issues between us promptly and directly, Axopar and Purchaser agree to begin any arbitration under this Limited Warranty within one year after the claim first arose; otherwise, the claim is waived. Axopar and Purchaser also agree to arbitrate in each of our individual capacities only – not as a representative or member of a class – and each of us expressly waives any right to file a class action or seek relief on a class action basis. Furthermore, unless Purchaser and Axopar agree in writing, the arbitrator may not consolidate more than one person's claims and may not otherwise preside over any form of a representative of class proceeding.

(D) *Confidentiality*

All arbitration proceedings are confidential, unless both Purchaser and Axopar agree otherwise. Arbitration orders and awards required to be filed with applicable courts of competent jurisdiction are not confidential and may be disclosed by the parties to such courts. A party who improperly discloses confidential information will be subject to sanctions. The arbitrator and forum may disclose case filings, case dispositions, and other case information as required by a court order of proper jurisdiction.